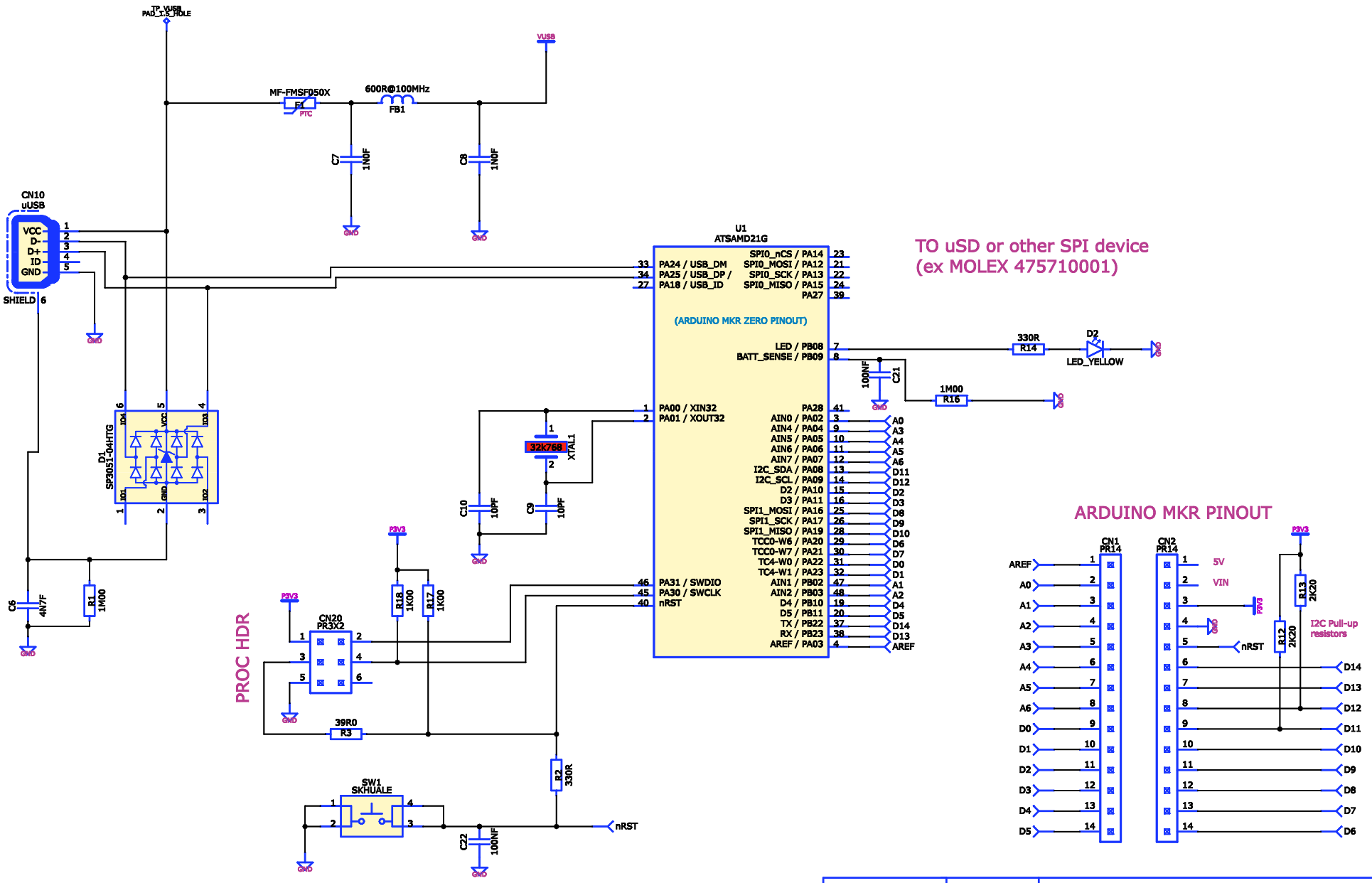

ELAB Dept of Physics University of Oslo	PROJECT	ucArduino	
	SHEET		
	DRAWN	kunzh	08.03.2022
	CHECKED		

SHT
OF