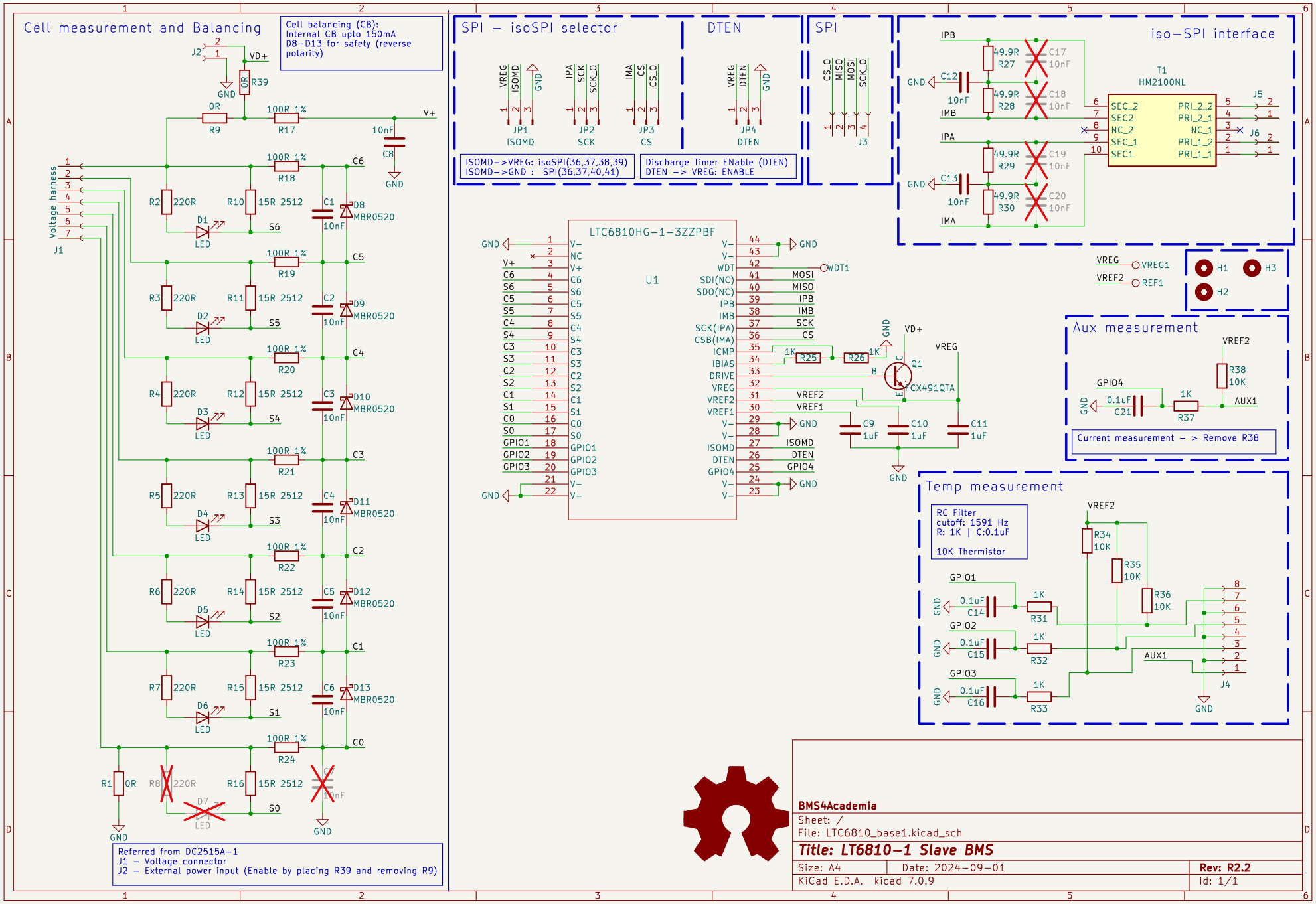
Cell measurement and Balancing
Cell balancing (CB):
Internal CB upto 150mA
D8–D13 for safety (reverse polarity)
Voltage harness
J1
J2
VD+
R39
0R
R9
100R 1%
R17
V+
10nF
C8
GND
R18
C6
R2 220R
R10 15R 2512
C1
D8 MBR0520
D1 LED
S6
R19
C5
R3 220R
R11 15R 2512
C2
D9 MBR0520
D2 LED
S5
R20
C4
R4 220R
R12 15R 2512
C3
D10 MBR0520
D3 LED
S4
R21
C3
R5 220R
R13 15R 2512
C4
D11 MBR0520
D4 LED
S3
R22
C2
R6 220R
R14 15R 2512
C5
D12 MBR0520
D5 LED
S2
R23
C1
R7 220R
R15 15R 2512
C6
D13 MBR0520
D6 LED
S1
R24
C0
R1 0R
R8 220R
R16 15R 2512
C7
D7 LED
S0
Referred from DC2515A-1
J1 – Voltage connector
J2 – External power input (Enable by placing R39 and removing R9)
SPI – isoSPI selector
VREG ISOMD GND
JP1 ISOMD
IPA SCK SCK_O
JP2 SCK
IMA CS CS_O
JP3 CS
ISOMD->VREG: isoSPI(36,37,38,39)
ISOMD->GND : SPI(36,37,40,41)
DTEN
VREG DTEN GND
JP4 DTEN
Discharge Timer ENable (DTEN)
DTEN -> VREG: ENABLE
SPI
CS_O MISO MOSI SCK_O
J3
iso-SPI interface
T1
HM2100NL
IPB
IMB
IPA
IMA
49.9R R27
49.9R R28
49.9R R29
49.9R R30
C17 10nF
C18 10nF
C19 10nF
C20 10nF
C12 10nF
C13 10nF
SEC_2 SEC2 NC_2 SEC_1 SEC1
PRI_2_2 PRI_2_1 NC_1 PRI_1_2 PRI_1_1
J5
J6
LTC6810HG-1-3ZZPBF
U1
V- NC V+ C6 S6 C5 S5 C4 S4 C3 S3 C2 S2 C1 S1 C0 S0 GPIO1 GPIO2 GPIO3
V- V- WDT SDI(NC) SDO(NC) IPB IMB SCK(IPA) CSB(IMA) ICMP IBIAS DRIVE VREG VREF2 VREF1 V- V- ISOMD DTEN GPIO4 V- V-
WDT1
MOSI MISO IPB IMB SCK CS
R25 1K
R26 1K
Q1
FCX491QTA
VD+
VREG
C9 1uF
C10 1uF
C11 1uF
VREF2
VREF1
ISOMD
DTEN
GPIO4
VREG
VREF2
VREG1
REF1
H1
H2
H3
Aux measurement
GPIO4
0.1uF C21
1K R37
R38 10K
AUX1
Current measurement -> Remove R38
Temp measurement
RC Filter
cutoff: 1591 Hz
R: 1K | C:0.1uF
10K Thermistor
R34 10K
R35 10K
R36 10K
GPIO1
GPIO2
GPIO3
0.1uF C14
0.1uF C15
0.1uF C16
1K R31
1K R32
1K R33
AUX1
J4
BMS4Academia
Sheet: /
File: LTC6810_base1.kicad_sch
Title: LT6810-1 Slave BMS
Size: A4
Date: 2024-09-01
Rev: R2.2
KiCad E.D.A. kicad 7.0.9
Id: 1/1