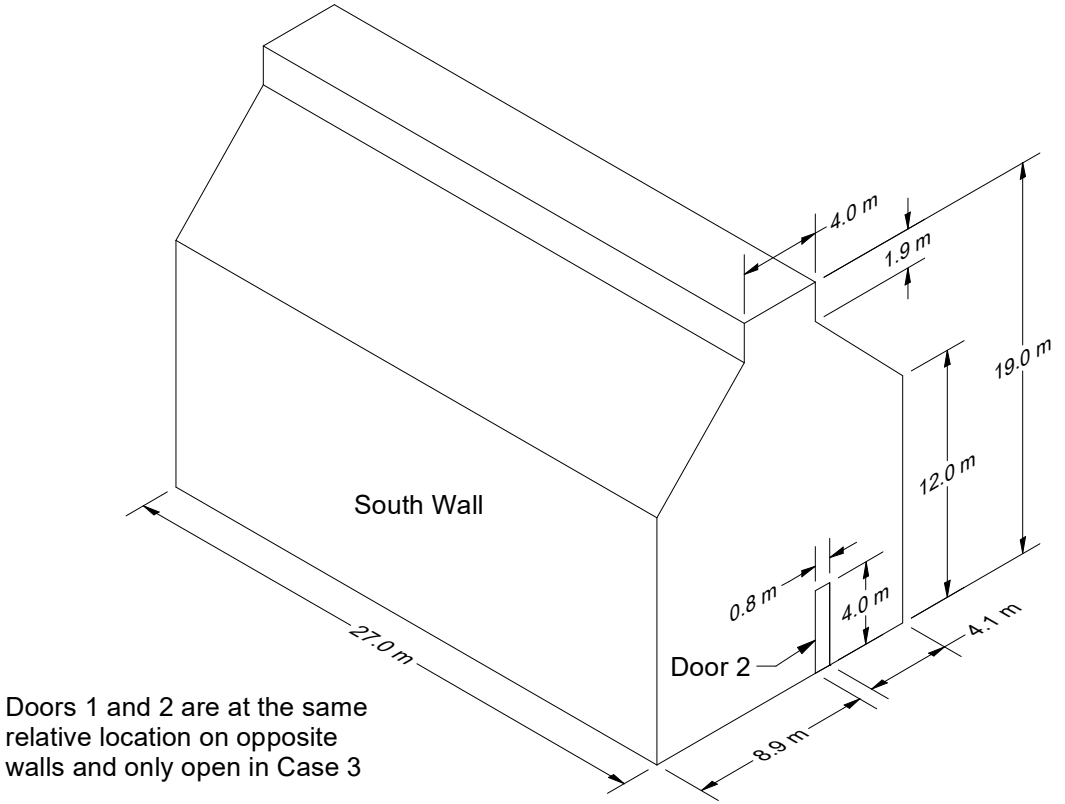
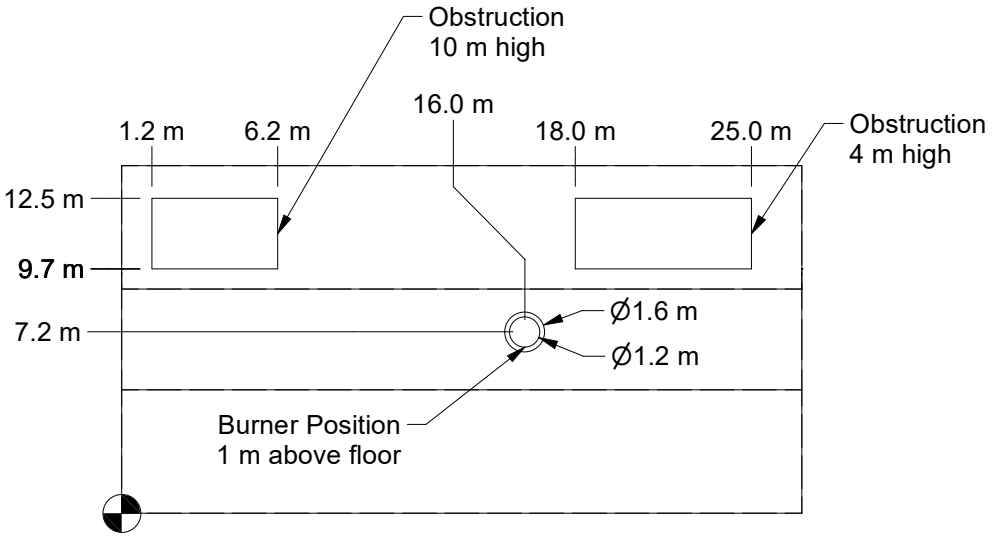
Doors 1 and 2 are at the same relative location on opposite walls and only open in Case 3