PB84-198431

EPA-600/2-84-109b
June 1984

STORM WATER MANAGEMENT MODEL USER'S MANUAL, VERSION III
Addendum I EXTRAN

by

Larry A. Roesner
Robert P. Shubinski
John A. Aldrich
Camp Dresser & McKee Inc.
Annandale, Virginia 22003

EPA COOPERATIVE AGREEMENT NO. CR805664

Project Officer

Douglas C. Ammon
Storm and Combined Sewer Section
Wastewater Research Division
Municipal Environmental Research Laboratory
Cincinnati, Ohio 45268

MUNICIPAL ENVIRONMENTAL RESEARCH LABORATORY
OFFICE OF RESEARCH AND DEVELOPMENT
U. S. ENVIRONMENTAL PROTECTION AGENCY
CINCINNATI, OHIO 45268

REPRODUCED BY
U.S. DEPARTMENT OF COMMERCE
NATIONAL TECHNICAL
INFORMATION SERVICE
SPRINGFIELD, VA 22161

N O T I C E

THIS DOCUMENT HAS BEEN REPRODUCED FROM THE BEST COPY FURNISHED US BY THE SPONSORING AGENCY. ALTHOUGH IT IS RECOGNIZED THAT CERTAIN PORTIONS ARE ILLEGIBLE, IT IS BEING RELEASED IN THE INTEREST OF MAKING AVAILABLE AS MUCH INFORMATION AS POSSIBLE.

TECHNICAL REPORT DATA
(Please read Instructions on the reverse before completing)

1. REPORT NO. EPA-600/2-84-109b	2.	3. RECIPIENT'S ACCESSION NO. PB84 198431
4. TITLE AND SUBTITLE Storm Water Management Model User's Manual, Version III Addendum I EXTRAN		5. REPORT DATE June 1984
		6. PERFORMING ORGANIZATION CODE
7. AUTHOR(S) Larry A. Roesner, Robert P. Shubinski, John A. Aldrich		8. PERFORMING ORGANIZATION REPORT NO.
9. PERFORMING ORGANIZATION NAME AND ADDRESS Camp Dresser & McKee, Inc. Water Resources Division 7620 Little River Turnpike Amadale, VA 22003		10. PROGRAM ELEMENT NO.
		11. CONTRACT/GRANT NO. EPA Cooperative Agreement No. CR805664
12. SPONSORING AGENCY NAME AND ADDRESS Municipal Environmental Research Laboratory - Cin., OH Office of Research and Development U.S. Environmental Proteciton Agency Cincinnati, OH 45268		13. TYPE OF REPORT AND PERIOD COVERED Final, 2/79 - 8/81
		14. SPONSORING AGENCY CODE EPA/600/14

15. SUPPLEMENTARY NOTES

Project Officer: Douglas C. Ammon, 513/684-7635, FTS 684-7635

16. ABSTRACT

This report contains the documentation and user's manual for the Extended Transport (EXTRAN) Block of the Storm Water Management Model (SWMM). EXTRAN is a dynamic flow routing model used to compute backwater profiles in open channel and/or closed conduit systems experiencing unsteady flow. It represents the drainage system as links and nodes, allowing parallel or looped pipe networks; weirs, orifices, and pumps; and system surcharges to be simulated. EXTRAN is used most efficiently if it is only applied to those parts of the drainage system which cannot be simulated accurately by simpler, less costly models.

The EXTRAN manual is designed to give the user complete information on executing of the model both as a block of the SWMM package and as an independent model. Formulation of the input data is discussed in detail and demonstrated by seven example problems. Typical computer output is also discussed. Problem areas which the user may confront are described, as well as the theory on which the EXTRAN model rests. The manual concludes with a comprehensive discussion of the EXTRAN code.

17. KEY WORDS AND DOCUMENT ANALYSIS

a. DESCRIPTORS	b. IDENTIFIERS/OPEN ENDED TERMS	c. COSATI Field/Group
Water pollution, Combined sewers, Water quality, Mathematical models	Storm Drainage, Flood Routing, Computer Modeling, Hydraulic Systems, Gradually Varied Flow	13B

18. DISTRIBUTION STATEMENT Release to public	19. SECURITY CLASS (This Report) Unclassified	21. NO. OF PAGES 241
	20. SECURITY CLASS (This page) Unclassified	22. PRICE

EPA Form 2220-1 (9-73)

DISCLAIMER

Although the information described in this article has been funded wholly or in part by the United States Environmental Protection Agency through assistance agreement number CR805664 to the University of Florida, it has not been subjected to the Agency's required peer and administrative review and therefore does not necessarily reflect the views of the Agency and no official endorsement should be inferred.

FOREWORD

The U.S. Environmental Protection Agency was created because of increasing public and government concern about the dangers of pollution to the health and welfare of the American people. Noxious air, foul water, and spoiled land are tragic testimonies to the deterioration of our natural environment. The complexity of that environment and the interplay of its components require a concentrated and integrated attack on the problem.

Research and development is that necessary first step in problem solution; it involves defining the problem, measuring its impact, and searching for solutions. The Municipal Environmental Research Laboratory develops new and improved technology and systems to prevent, treat, and manage wastewater and solid and hazardous waste pollutant discharges from municipal and community sources, to preserve and treat public drinking water supplies, and to minimize the adverse economic, social, health, and aesthetic effects of pollution. This publication is one of the products of that research and provides a most vital communications link between the researcher and the user community.

Mathematical models are an important tool for use in analysis of quantity and quality problems resulting from urban storm water runoff and combined sewer overflows. This report is an updated user's manual and documentation for one of the first of such models, the EPA Storm Water Management Model (SWMM). Detailed instructions on the use of the model are given and its use is illustrated with case studies.

Francis T. Mayo, Director
Municipal Environmental
Research Laboratory

PREFACE

This document is the user's guide and program documentation for the computer model EXTRAN. EXTRAN is a dynamic flow routing model that routes inflow hydrographs through an open channel and/or closed conduit system, computing the time history of flows and heads throughout the system. While the computer program was developed primarily for use in urban drainage systems -- including combined systems and separate systems -- it can be used for stream channels also if the cross-section can be adequately represented as a trapezoidal channel.

EXTRAN is intended for application in systems where the assumption of steady flow, for purposes of computing backwater profiles, cannot be made. The program solves the full dynamic equation for gradually varied flow (Navier-Stokes equation) using an explicit solution technique to step forward in time. As a result, the solution time-step is governed by the wave celerity in the shorter channels or conduits in the system. Time-steps of 5-seconds to 60-seconds are typically used, which means that computer time is a significant consideration in the use of the model.

The conceptual representation of the drainage system is based on the "link-node" concept which does not constrain the drainage system to a dendritic form. This permits a high degree of flexibility in type of problems that can be examined with EXTRAN. These include parallel pipes, looped systems, lateral diversions such as weirs, orifices, pumps, and partial surcharge within the system.

Because of the versatility of the EXTRAN model, there is a tendency for some users to apply the model to the entire drainage system being analyzed even though flow routing through most of the system could be performed with a simpler model such as RUNOFF or TRANSPORT*. The result is a very large system simulated at relatively small time-steps which produces great quantities of data that are difficult to digest. Where simpler models are applicable (no backwater, surcharges, or bifurcations) substantial savings in data preparation and computer solution time can be realized using the simpler routing model.

EXTRAN has limitations which, if not appreciated can result in improperly specified systems and the erroneous computation of heads and flows. The significant limitations are these:

- Headloss at manholes, expansions, contractions, bends, etc. are not explicitly accounted for. These losses

*That is, the RUNOFF and TRANSPORT Modules from the EPA SWMM computer program.

must be reflected in the value of the Manning n specified for the channels or conduits where the loss occurs.

- Changes in hydraulic head due to rapid expansions or contractions are neglected. At expansions, the headloss will tend to equalize the heads; but at contractions, the headloss could aggravate the problem.

- At a manhole where the invert of connecting pipes are different (e.g., a drop manhole), computational errors will occur during surcharge periods if the invert of the highest pipe lies above the crown of the lowest pipe. The severity of the error increases as the separation increases.

- Computational instabilities can occur at junctions with weirs if: 1) the junction is surcharged, and 2) the weir becomes submerged to the extent that the downstream head equals or exceeds the upstream head.

- EXTRAN is not capable of simulating water quality. Any quality information input on tape to EXTRAN is ignored by the program.

Methods for dealing with these problems are discussed in Chapter 4.

Finally, a word of caution. EXTRAN is a tool, like a calculator, that can assist engineers in the examination of the hydraulic response of a drainage system to inflow hydrographs. While the model is based on scientific truth, approximation in time and space are made in order to solve these problems. While we have tried to anticipate most prototype configurations, these approximations may not be appropriate in some system configurations or unusual hydraulic situations. Therefore, persons using the computer program must be experienced hydraulicians. The computational results should never be taken for granted, but rather the computer output should be scanned for each simulation to look for suspicious results. The checking procedure should be analogous to that which would be followed in checking a backwater profile that a junior engineer had performed by hand computation. Remember that the major difference between the engineer and the computer is that the computer can't think!

ABSTRACT

This report contains the documentation and user's manual for the Extended Transport (EXTRAN) Block of the Storm Water Management Model (SWMM). EXTRAN is a dynamic flow routing model used to compute backwater profiles in open channel and/or closed conduit systems experiencing unsteady flow. It represents the drainage system as links and nodes, allowing parallel or looped pipe networks; weirs, orifices, and pumps; amd system surcharges to be simulated. EXTRAN is used most efficiently if it is only applied to those parts of the drainage system which cannot be simulated accurately by simpler, less costly models.

The EXTRAN manual is designed to give the user complete information in executing of the model both as a block of the SWMM package and as an independent model. Formulation of the input data is discussed in detail and demonstrated by seven example problems. Typical computer output is also discussed. Problem areas which the user may confront are described, as well as the theory on which the EXTRAN model rests. The manual concludes with a comprehensive discussion of the EXTRAN code.

This report was submitted in partial fulfillment of EPA Cooperative Agreement No. CR805664 to the University of Florida under the partial sponsorship of the U.S. Environmental Protection Agency. Camp Dresser & McKee, Inc. prepared this report as a contractor to the University of Florida. Work was completed as of August, 1981.

CONTENTS

	Page
Foreword	iii
Preface	iv
Abstract	vi
Figures	ix
Tables	xi
1. Block Description	1
Background	1
Program Operating Requirements	2
Interfacing With Other SWMM Blocks	2
2. Instructions For Data Preparation	6
Introduction	6
Input Data Description	10
3. Example Problems	28
Introduction	28
Example 1: Base Pipe System	28
Example 2: Tide Gate Outfall	29
Example 3: Sump Orifice Diversion	29
Example 4: Weir Diversion	29
Example 5: Storage Facility with Side Outlet Orifice	29
Example 6: Off-Line Pump Station	29
Example 7: In-Line Pump Station	30
4. Tips For Trouble-Shooting	91
5. Formulation of EXTRAN	95
General	95
Conceptual Representation of the Transport System	95
Basic Flow Equations	99
Solution of Flow Equations by Modified Euler Method	100
Numerical Stability	102
Special Pipe Flow Considerations	103
Head Computation During Surcharge and Flooding	105
Flow Control Devices	108
Pump Stations	115
Outfall Structures	117
6. Program Structure of EXTRAN	118
General	118
Subroutine EXTRAN	118
Subroutine TRANSX	118
Subroutine BOUND	123
Subroutine DEPTH	124
Subroutine HEAD	124
Subroutine HYDRAD	125

CONTENTS

Page

6. Program Structure of EXTRAN (Continued)
Subroutine INDATA 125
Subroutine INFLOW 127
Subroutine TIDCF. 127
Subroutine OUTPUT 127
Subroutine CURVE, PINE, PPLOT, SCALE. 128

English/Metric Conversion Factors. 129
References 130
Appendix A 131

FIGURES

Number		Page
1	Summary of EXTRAN Run Times on CDC and Univac Systems. . . .	3
2	Schematic of EXTRAN Block Setup Deck	4
3	Runoff Subbasins Tributary to South Boston Interceptor . . .	7
4	Schematic Representation of the South Boston Sewerage System For Use in the EXTRAN Model	8
5	Definition of Elevation Terms For Three-Pipe Junction . . .	13
6	Definition Sketch of Weir Input Data	16
7	Definition Sketch of Pump Input Data	16
8	Basic System With Free Outfall	31
9	Basic System With Tide Gate	67
10	Sump Orifice at Junction 82309	71
11	Weir at Junction 82309	75
12	Storage Facility and Side Outlet Orifice at Junction 82309 .	79
13	Off-Line Pump Station (Activated by Wet-Well Volume) at Junction 82310	83
14	In-Line Pump (Stage Activated) at Junction 82309	87
15	Schematic Illustration of EXTRAN	96
16	Conceptual Representation of the Transport Model	98
17	Modified Euler Solution Method For Discharge Based on Half-Step, Full-Step Projection.	101
18	Special Hydraulic Cases in Transport Flow Calculations . . .	104
19	Conceptual Representation of a Storage Junction.	109

FIGURES
(Continued)

Number		Page
20	Typical Orifice Diversions	111
21	Representation of Weir Diversions.	112
22	Schematic Presentation of Pump Diversion	116
23	Transport Block Program Flowchart.	119
24	Master Flowchart For The Transport Block	121

TABLES

Number		Page
1	EXTRAN Data Requirements	19
2	Input Data Set For Example Problem 1	32
3	Output From Example Problem 1	33
4	Input Data Set For Example Problem 2	68
5	Output From Example Problem 2	69
6	Input Data Set For Example Problem 3	72
7	Output From Example Problem 3	73
8	Input Data Set For Example Problem 4	76
9	Output From Example Problem 4	77
10	Input Data Set For Example Problem 5	80
11	Output From Example Problem 5	81
12	Input Data Set For Example Problem 6	84
13	Output From Example Problem 6	85
14	Input Data Set For Example Problem 7	88
15	Output From Example Problem 7	89
16	Classes of Elements Included in the Transport Model	97
17	Properties of Nodes and Links in the Transport Model	97
18	Values of C_{SUB} as a Function of Degree of Weir Submergence	114
A-1	EXTRAN Input Data Forms	132
A-2	Key Variable Definiton	153
A-3	Program Listing	166

CHAPTER 1

BLOCK DESCRIPTION

BACKGROUND

EXTRAN is a hydraulic flow routing model for open channel and/or closed conduit systems. The EXTRAN Block receives hydrograph input at specific nodal locations by tape transfer from the RUNOFF Block and/or by input. The model performs dynamic routing of stormwater flows through the major storm drainage system to the points of outfall to the receiving water system. The program will simulate branched or looped networks, backwater due to tidal or nontidal conditions, free-surface flow, pressure flow or surcharge, flow reversals, flow transfer by weirs, orifices and pumping facilities, and storage at on or off-line facilities. Types of channels that can be simulated include circular, rectangular, horseshoe, egg, baskethandle pipes, plus trapezoidal channels. Simulation output takes the form of water surface elevations and discharge at selected system locations.

EXTRAN was developed for the City of San Francisco in 1973[1,2]. At that time it was called the San Francisco Model and (more properly) the WRE Transport Model. In 1974, EPA acquired this model and incorporated it into the SWMM package, calling it the Extended Transport Model - EXTRAN - to distinguish it from the TRANSPORT Module developed by the University of Florida as part of the original SWMM package. Since that time, the model has been refined, particularly in the way the flow routing is performed under surcharge conditions. Also, much experience has been gained in the use and misuse of the model.

This document is the User's Manual and Program Documentation of the most recent version of EXTRAN as extended and refined by Camp Dresser & McKee Inc. (CDM)[1]. The documentation section (Chapter 5) has been expanded to include more discussions of program limitations and the input data descriptions have been revised to provide more guidance in the preparation of data for the model.

The remainder of this chapter discusses program operating requirements and characteristics of EXTRAN, and how it interfaces with other SWMM blocks. Chapter 2 contains instructions for data preparation. Narrative discussions of the input data requirements contain tips for developing a well defined system. Chapter 3 consists of several example problems that demonstrate how to set up EXTRAN for each of the storage/diversion options in the model.

[1]Water Resources Engineers was wholly integrated into Camp Dresser & McKee, Inc. in 1980.

Chapter 4 discusses typical problems that can occur with the use of the model and what action should be taken to correct them. A discussion of error messages contained in the program is also presented. Chapter 5 describes the conceptual, mathematical, and functional respesentation of EXTRAN; the program structure and listing is contained in Chapter 6.

PROGRAM OPERATING REQUIREMENTS

EXTRAN was originally programed for the Univac 1108 in FORTRAN V. This version of the FORTRAN compiler is essentially compatible with the IBM FORTRAN LEVEL G compiler and the extended compiler used on CDC 6600 series equipment. The model was subsequently installed on IBM, CDC, DEC 20, and several other computers. The latest refinements to the model have been performed on the DEC 20 computer.

EXTRAN is presently sized to simulate drainage systems of up to 187 channels, 187 junctions, 20 storage elements, 60 orifices, 60 weirs, 20 pumps, and 25 outfalls. The core storage and peripheral equipment to operate this program are:

High speed core: $130{,}000_8$ words
$45{,}000_{10}$ words
Peripheral storage: 2 drum, disk or tape files
One card reader or input file device
One line printer

Execution times for EXTRAN are roughly proportional to the number of system conduits and the number of time-steps in the simulation period. A summary of CDM's prior experience in running the EXTRAN on both CDC 6600 and Univac 1108 systems is presented graphically in Figure 1. Using the Univac 1108 operating data in Figure 1 as an example, it is estimated that the total compuation time for a network of 100 pipes, using a 10-second time-step over a 1-hour simulation period, would be approximately 300 system-seconds. Run time for the example problems in Chapter 3 (9 pipes, 8 hour simulation, 20 second time-step) was about 44 seconds on the DEC 20 computer. Note that the curves presented in Figure 1 become highly nonlinear for $t \leq 10$ seconds because of the increased frequency of internal tape transfers and output processing.

INTERFACING WITH OTHER SWMM BLOCKS

The EXTRAN Program can easily be interfaced with other SWMM Blocks, even though EXTRAN is designed to stand by itself. Figure 2 shows a schematic overview of the EXTRAN Block and its relation to SWMM system control and input data cards. The EXTRAN Block receives hydrograph input at specific nodal locations either by tape transfer from a preceding block, usually RUNOFF, or by card input, described in Chapter 2. The output tape, which contains hydrographs at all system outfall points, can be generated if desired. This output tape can then be used as input to any subsequent SWMM Block, typically RECEIV. The EXTRAN Program itself is called as a subroutine by the Executive Block. The EXTRAN Block, in turn, reads the input data it requires to perform its flow routing function.

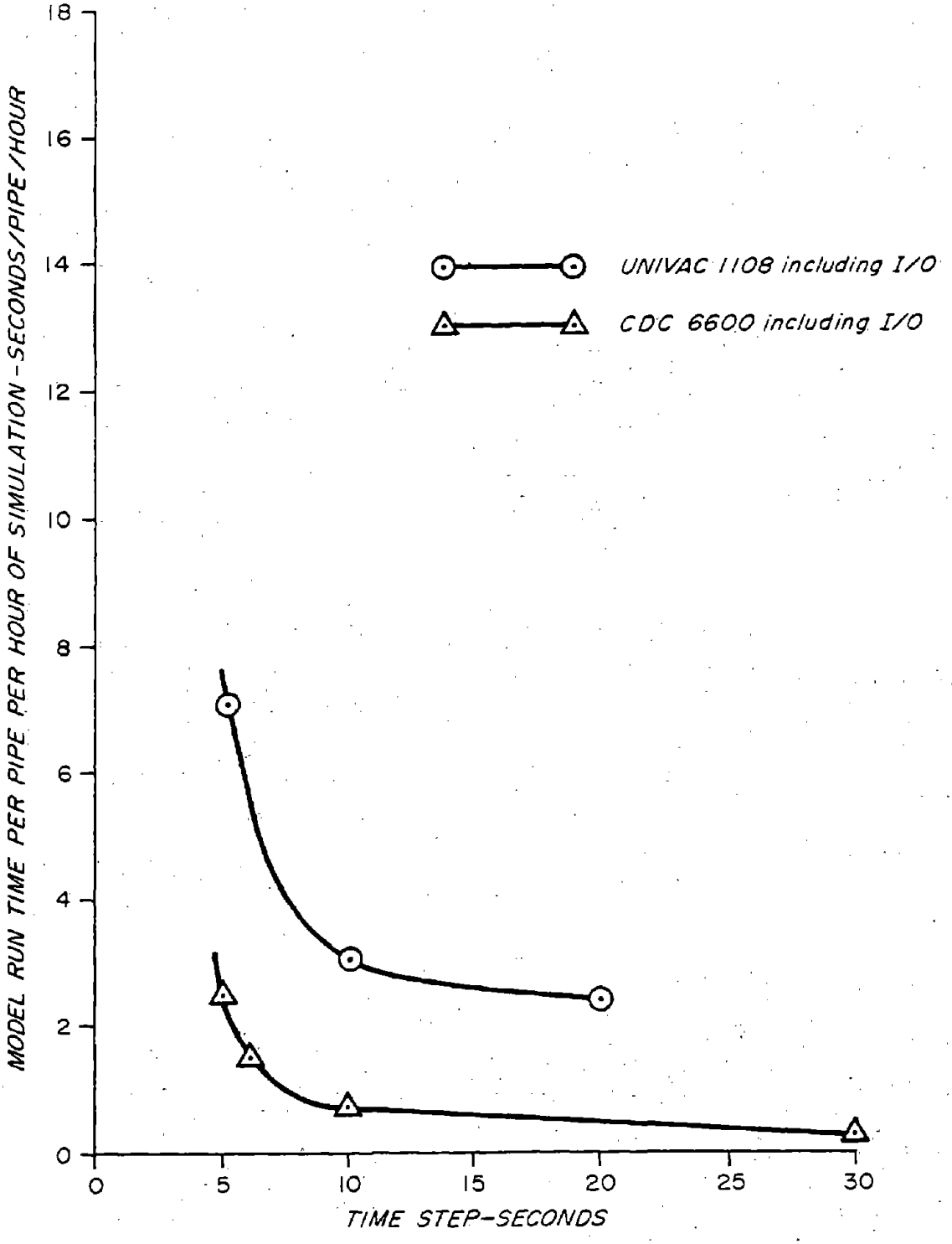

Figure 1. Summary of EXTRAN run times on CDC and UNIVAC systems.

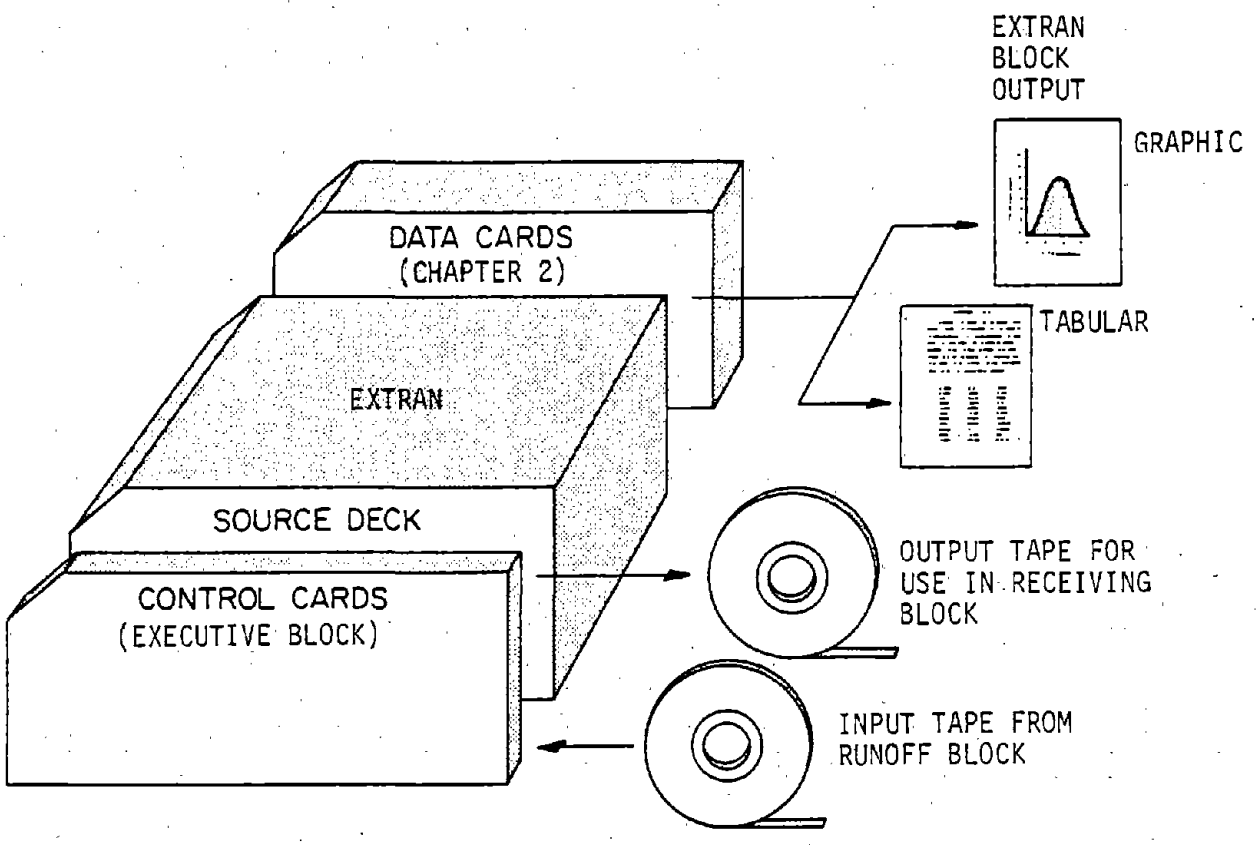

Figure 2. Typical schematic of EXTRAN block setup deck.

The version of EXTRAN shown in Appendix Table A-3 is set up to run outside the SWMM Executive Block. Chapter 6 explains the revisions to the code needed to convert the present main program of EXTRAN to Subroutine EXTRAN of the Executive Block. Although SWMM is designed to run successive blocks consecutively without user intervention, it is strongly recommended that this option not be used with EXTRAN. Simulation results should be examined before they are used as input to EXTRAN; EXTRAN results should be reviewed, in turn, for reasonableness before they are input to subsequent blocks. To bypass the inter-block review process is to invite undetected errors in the analysis results and/or to require expensive reruns of blocks that used erroneous output data from a preceeding block.

If EXTRAN is the only block called from the Executive Block, input data for the Executive Block would be structured as follows:

CARD GROUP 1 I/O tape/disk assignments

JIN = output tape/file number from, typically, the RUNOFF Block if RUNOFF hydrographs are to be used in simulation

= 0 if input hydrographs are from cards only (See Card Group 20 and 21 in EXTRAN Block input data description)

JOUT = output tape/file number that will be used to input outfall hydrographs from EXTRAN into a subsequent block such as RECEIV

= 0 if the outfall hydrographs are not required by a subsequent block

Note that there is no EXTRAN Quality Block. If pollutographs are to be routed through the drainage system, it is suggested that RUNOFF or TRANSPORT be used for this purpose.

CARD GROUP 2 - Scratch tape/disk assignment

Enter a blank card

CARD GROUP 3 - Block Control Card

Enter EXTRAN only

In this case, Card Group 1 of the EXTRAN input data set shown in Chapter 2, Table 1, is not needed and should be omitted. If, on the other hand, EXTRAN is run independently of the Executive Block using the code shown in Appendix Table A-3, the input data set should be formed exactly as shown in Table 1, omitting the above Executive Block input data.

CHAPTER 2

INSTRUCTIONS FOR DATA PREPARATION

INTRODUCTION

When a drainage system is to be analyzed with EXTRAN, the first step in the study is generally to define the sewer system and the watershed (sewershed) that it drains. This information is usually available from the agency responsible for operation and maintenance of the system. Care should be taken in this step to insure that "as built" drawings of the system are used. Where information is suspect, a field investigation is in order.

Once the sewer system and watershed has been defined, the watershed is subdivided into subareas in accordance with the guidelines presented in the RUNOFF Block documentation. Figure 3 shows the South Boston combined sewer system and its watershed subdivided into subbasins. Figure 4 is a schematic representation of the South Boston combined sewer system. Note that "TRANSPORT" refers to EXTRAN in this case. The figure shows all pipes and channels to be simulated in the study, the location and type of all diversion structures and all system outlets and overflow points. It may be of interest to note here that the 6000-series channels at the Columbus Park Headworks represent the four-channel grit chambers in the headworks that determine the stage-discharge relationship at Junction 60101 in the sytem.

Note that conduits are distinguished on Figure 4 between those that will be simulated in RUNOFF and those to be simulated in EXTRAN. As a general rule, the upstream portions of the drainage system should be represented in RUNOFF as much as possible because the data preparation is more simple and the flow routing takes less computer time. The dividing point for the two systems is the point where backwater effects, surcharge, and/or diversion facilities affect the flow and head computation. Pipes and channels downstream of this point should be included in EXTRAN.

Junction Points should be identified at each:

- Upstream terminal point in the system,
- Outfall and discharge point,
- Pump station, storage point, orifice and weir diversion,
- Junction where inflow hydrographs will be input (either by card input or from RUNOFF),
- Pipe junction,
- Point where pipe size/shape changes significantly,
- Point where pipe slope changes significantly, and
- Point where pipe inverts are significantly different.

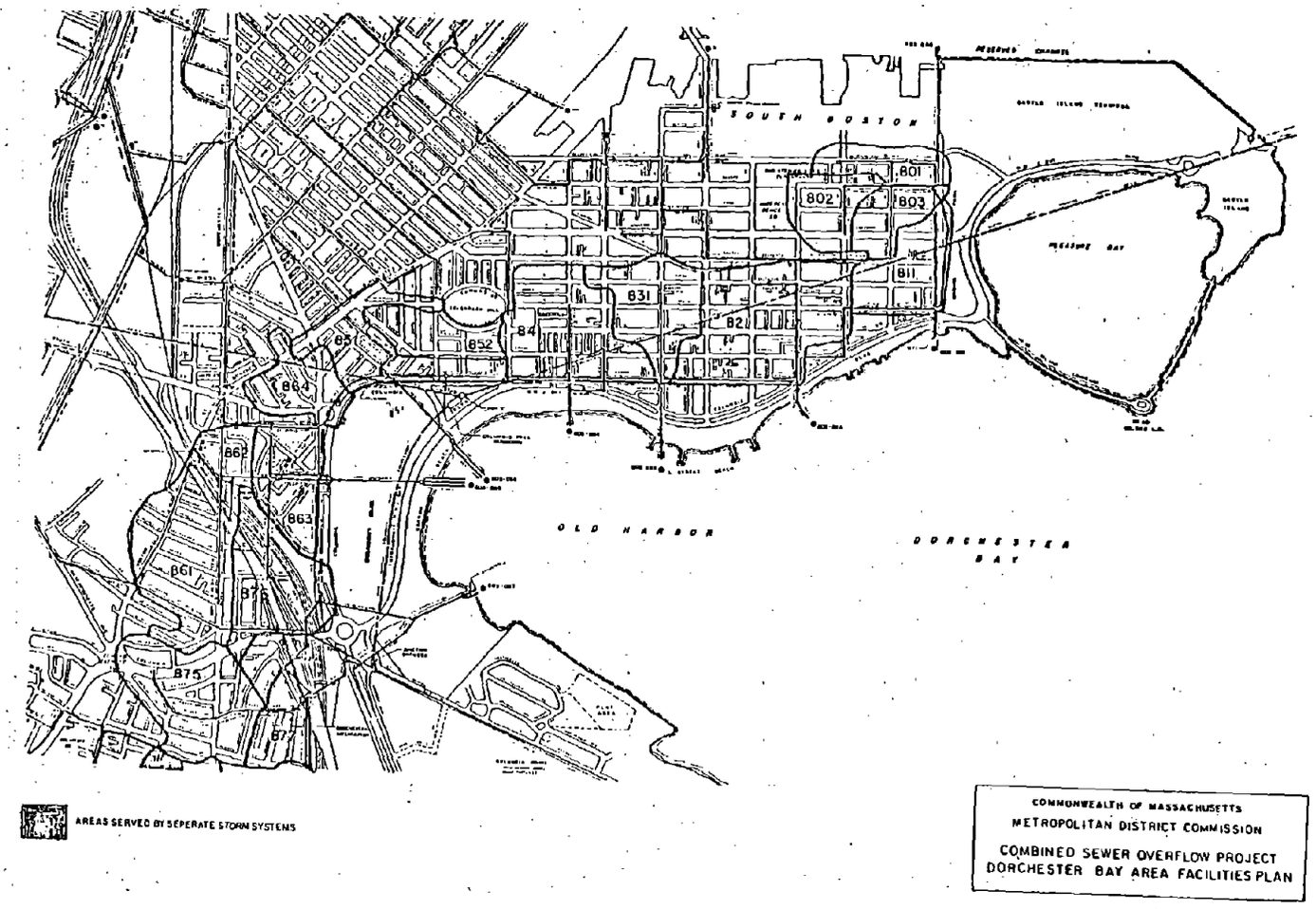

Figure 3. Runoff Subbasins Tributary to South Boston Interceptor.

Reproduced from best available copy.

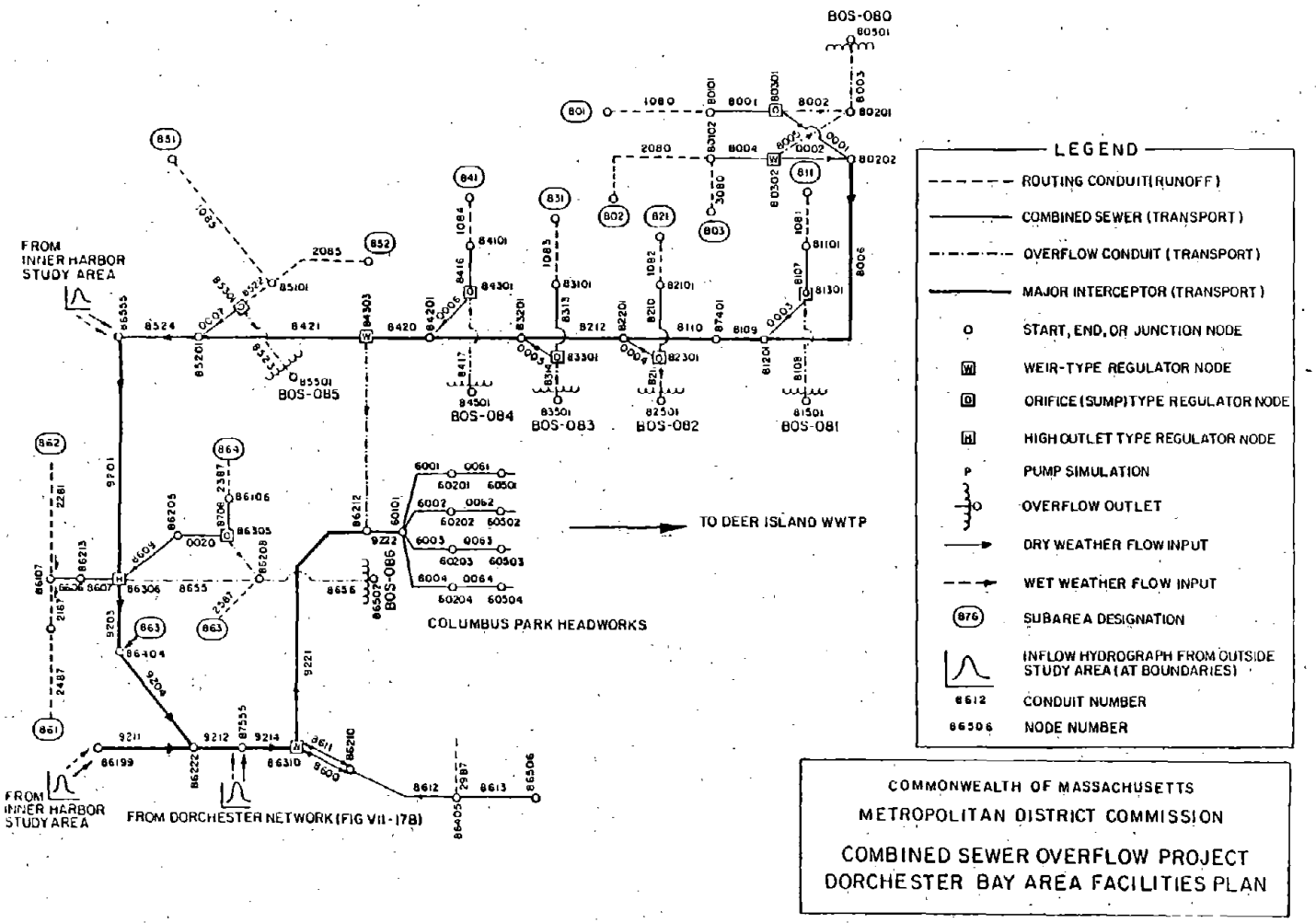

Figure 4. Schematic Representation of the South Boston Sewerage System for Use in the EXTRAN Model.

Reproduced from best available copy.

Following the preliminary identification of junction points, a check should be made to eliminate extremely long or short distances between junctions. As a rule of thumb, the longest conduit should not exceed four or five times the length of the shortest conduit. If this occurs, short conduits can be increased in length by use of equivalent pipes and long conduits can be shortened by adding intermediate junction points.

Keep in mind when setting conduits lengths (placing junctions) that the time-step is generally controlled by the wave celerity in the system. To estimate the time-step, first compute:

$$\Delta t_c = \frac{L}{\sqrt{gD}} \tag{1}$$

where:

Δt_c = time for a surface wave to travel from one end of a conduit to the other in seconds,
L = conduit length in feet,
g = 32.2 ft/sec,
D = channel depth or pipe diameter in feet.

The time-step can usually exceed Δt_c by a factor of 1.5 to 2.0 for a few widely separated conduits. For most problems, conduit lengths can be of such length that a 15 to 30 second time-step can be used. Occasionally, a 5 to 10 second time-step is required. A time-step of 60 to 90 seconds should not be exeeded even in large open channel systems where the celerity criteria is not violated with a larger time-step.

If an extremely short pipe is included in the system, as indicated by a small Δt_c, an equivalent longer pipe can be developed using the following steps. First, set the Manning equation for the pipe and its proposed equivalent equal:

$$\frac{1.49}{n_p} A_p R_p^{2/3} S_p^{1/2} = \frac{1.49}{n_e} A_e R_e^{2/3} S_e^{1/2} \tag{2}$$

where:

p = actual pipe,
e = equivalent pipe,
n = Manning's roughness coefficient,
A = cross-sectional area,
R = hydraulic radius, and
S = slope of the hydraulic grade line.

If we assume that the equivalent pipe will have the same cross-sectional area and hydraulic radius as the pipe it replaces, we can say:

$$S_p^{1/2}/n_p = S_e^{1/2}/n_e \tag{3}$$

Now, since

$$S = {}^{h}L/L \tag{4}$$

where:

h_L = the total head loss over the conduit length, and
L = conduit length,

and since the head losses are to be equal in both pipes, equation (2) can be simplified to:

$$n_e = n_p L_p^{1/2} / L_e^{1/2} \qquad (5)$$

where L_e is the desired equivalent pipe length, either no smaller than four to five times smaller than the longest pipe in the system, or large enough to give a t_c within the range indicated above. The user, through experience, will be able to determine the pipe length changes required to achieve stability and an acceptable time-step for the simulation.

At this point, the system schematic should be in pretty good shape for developing model input data. The remaining sections of this chapter describe, step-by-step, how to develop the input data file for EXTRAN.

INPUT DATA DESCRIPTION

Specifications for input data preparation are contained in Table 1. The table defines input format column location and variable description and name. Table A-1 in the Appendix is a set of input data forms which can be used to facilitate encoding the data for EXTRAN. Perusal of Table 1 reveals that the input data is divided into 22 card groups. Card Groups 1-7 are control cards that identify the simulation, set the time-step and start time, and identify junctions for card input hydrograph, and junction and conduits for printing and plotting of heads and flows. The identification of conduits and junctions is done in Card Groups 8 and 9, respectively. Card Groups 10-13 identify storage and diversion junctions, while Groups 14-18 identify system outfalls and backwater conditions at the outfalls. Initial conditions for heads and flows are defined in Card Groups 19-20. Card Groups 21 and 22 define card input hydrographs. Further descriptions of the data to be entered in each card group are given below.

Card Group 1: Tape Numbers

Card Group 1 is a single card which specifies the identifying numbers of tapes used for input and output hydrograph storage, if used. A zero should be entered if a particular tape is not used. Card Group 1 should be included only if EXTRAN is to be run on its own, i.e., outside the SWMM Executive Block.

Card Group 2: Run Identification

Card Group 2 consists of 2 cards, each having 80 columns or less, which typically describe the system and the particular storm being simulated.

Card Group 3: Run Control

Card Group 3 is a single card defining the number of integration steps in the simulation period, the length of each time-step, output control data, the number of hydrograph input points to be supplied by cards (in addition to, or rather than, tape input generated by the Runoff Block), and control parameters for iterations on computations for surcharged areas.

The time-step, DELT, is most critical to the cost and stability of the EXTRAN model run and must be selected carefully. The time-step should be selected according to the guideline described in the Introduction to this chapter (see Equation 1). The computer program will check each conduit for violation of the surface wave criteria and will print the message:

**** WARNING **** (C*DELT/LEN) IN CONDUIT IS rrr AT FULL DEPTH

where rrr is the ratio

$$rrr = \frac{\Delta t\sqrt{gD}}{L} \qquad (6)$$

where

Δt = the time-step
g = gravity
D = conduit height or pipe diameter
L = conduit length

As already noted, if rrr is greater than 1.5 or 2.0 for any conduit, or if several conduits have rrr over 1.5, the time-step should be reduced. rrr should never exceed 1.0 in a terminal conduit (i.e., an upstream terminal conduit or outfall).

Another constraint to be observed carefully is the length of the total simulation period defined as the product of NTCYC and DELT. This period must not extend in time beyond the simulation period of any preceding block. Otherwise, an improper attempt to read beyond the end-of-file of the input hydrograph tape is made and execution of EXTRAN stops.

The printing interval, INTER, also must be specified carefully to insure proper output of heads, velocities, and flows. The present output capacity of EXTRAN provides for 100 values each of nodal water depth, elevation, conduit flow, and velocity to be printed as detailed output for any given simulation run. When this number is exceeded, the printing arrays are filled with extraneous results taken from other core storage locations which bear no resemblance to the desired output. As an example, if NTCYC = 1600 and we start printing in cycle 1(NSTART=1), then INTER must = 16 or more to maintain correct printing control. Alternatively, if NSTART = 801 then INTER can be 8. Also, the output looks better if NSTART and INTER are selected so that the first (and subsequent) output(s) occurs at an even minute(s) or half minute(s).

The variables ITMAX and SURTOL control the accuracy of the solution in surcharged areas. In reality, the inflow to a surcharged area should equal the outflow from it. Therefore, the flows and heads in surcharged areas are

recalculated until either the difference in inflows and outflows is less than a tolerance, defined as SURTOL times the average flow in the surcharged area, or the number of iterations exceeds ITMAX. It has been found that good starting values for ITMAX and SURTOL are 30 and 0.05, respectively. The user should be careful to check the intermediate printout, which indicates whether the iteration is converging. Also, if there is more than one surcharged section of the drainage system, special rules apply. More details on checking convergence of the surcharge iterations are found in Tips For Troubleshooting (Chapter 4).

Card Groups 4 and 5: Detailed Printing for Junctions and Conduits

Card Group 4 contains the list of individual junctions (up to 20) for which water depth and water surface elevations are to be printed continuously throughout the course of the simulation period. Card Group 5 contains the list of individual conduits (up to 20) for which flows and velocities are to be printed.

Card Groups 6 and 7: Detailed Plotting for Junctions and Conduits

Card Groups 6 and 7 contain, respectively, the lists of junctions and conduits for which time histories and water surface elevation and flows are to be plotted.

Card Group 8: Conduit Data

Card Group 8 contains data input specification for conduits including shape, size, length, hydraulic roughness, connecting junctions, and invert distances referenced from the junction invert. The input data instructions, as presented in Table 1, are self-explanatory with the exception of junction/conduit invert elevations.

Basic definitions of conduit invert distances ZP(N,1) and ZP(N,2) are illustrated in Figure 5. The junction invert elevation is specified in Card Group 9. The distance ZP is height of the invert of connecting conduits above the junction floor. Note, however, that the lowest pipe connected to the junction (pipe N in Figure 5) must have a ZP of zero. If it does not, the junction will behave like a mass sink in the system. Water will flow into the junction but none will flow out.

Card Group 9: Junction Data

The explanation of ground and invert elevations is also shown in Figure 5. One junction card is required for every junction in the network including: regular junctions, storage and diversion junctions, pump junctions, and outfall junctions. It is emphasized again that the junction invert elevation is defined as the invert elevation of the lowest pipe connected to the junction. The program execution will terminate with an error message:

```
**** ERROR **** ALL CONDUITS CONNECTING TO JUNCTION ___
LIE ABOVE THE JUNCTION INVERT
```

unless there is at least one pipe having a zero ZP at the junction.

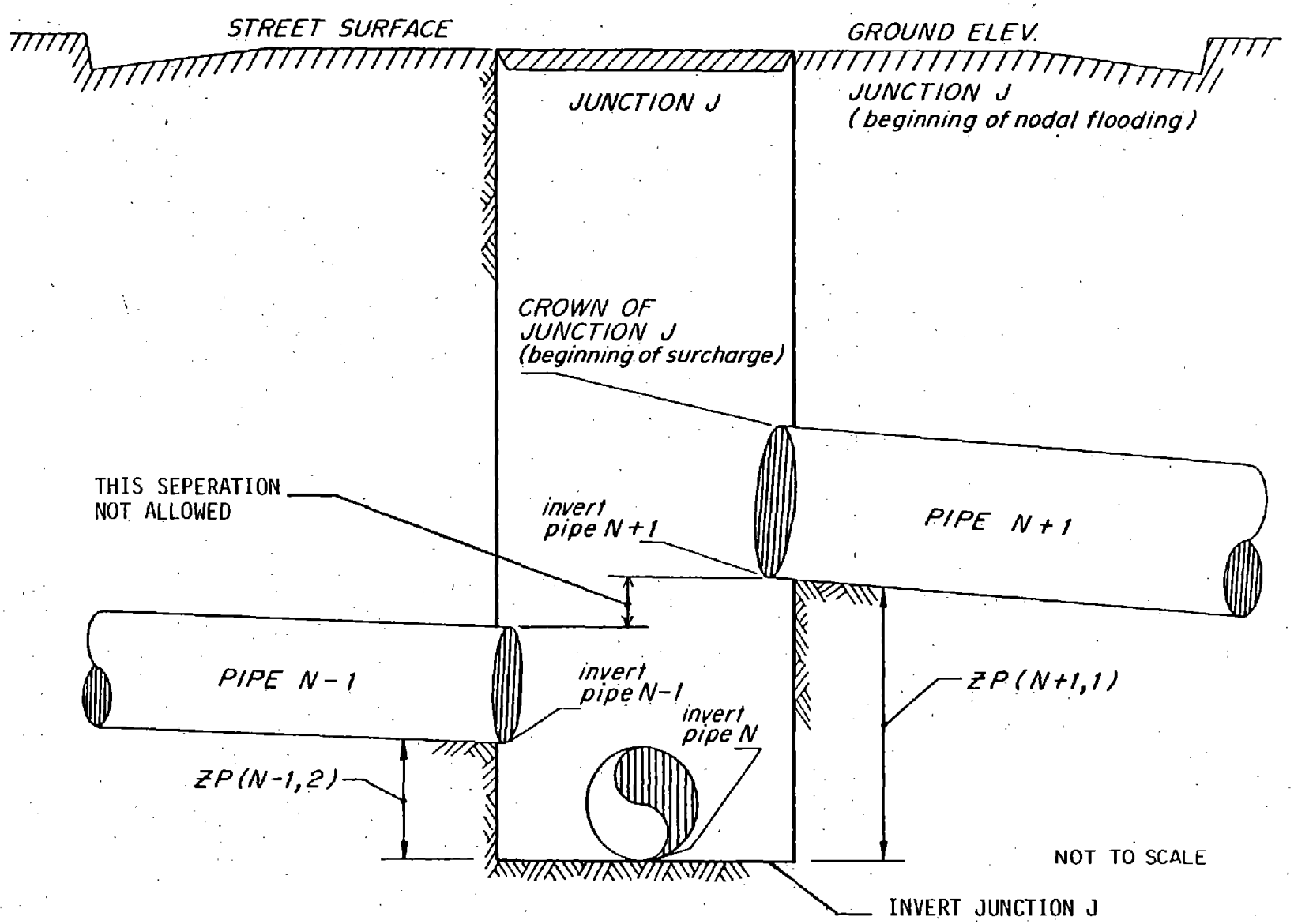

Figure 5. Definition of elevation terms for three-pipe junction.

The surcharge level or junction crown elevation is defined as the crown elevation of the highest connecting pipe and is computed automatically by EXTRAN. Note that the junction must not surcharge except when the water surface elevation exceeds the crown of the highest pipe connected to the junction. Pipe N+1 in Figure 5 is too high. This junction would go into surcharge during the period when the water surface is between the crown of pipe N-1 and the invert of pipe N+1. If a junction is specified as shown in Figure 5 and the water surface rises above the crown of pipe N-1, the program will print an error message:

```
**** ERROR **** SURFACE AREA AT JUNCTION ___ IS ZERO,
CHECK FOR HIGH PIPE
```

and will then stop. To correct this situation, a new junction should be specified that connects to pipe N+1. A "dummy conduit" is specified which connects the old junction with pipes N-1 and N to the new junction which connects to pipe N+1. The pipe diameter should be that of N+1 and the length selected to meet the stability criteria given by Equation 6. The Manning n for the "dummy pipe" is computed to reflect the energy loss that occurs during surcharge as water moves up through the manhole and into pipe N+1.

The "ground elevation", GRELEV(J), is the elevation at which the assumption of pressure flow is no longer valid. Normally, this will be the street or ground elevation; however, if the manholes are bolted down, the GRELEV(J) should be set sufficiently high so that the simulated water surface elevation does not exceed it. When the hydraulic head must exceed GRELEV(J) to maintain continuity at the junction, the program allows the excess junction inflow to "overflow onto the ground" and become lost from the system for the remainder of the simulation period.

QINST(J) is the net constant flow entering (positive) or leaving (negative) the junction.

Card Group 10: Storage Junctions

Conceptually, storage junctions are tanks of constant surface area, over their depth. A storage "tank" may be placed at any junction in the sytem, either in-line or off-line. The elevation of the top of the tank is specified in the storage junction data and must be at least as high as the highest pipe crown at the junction. If this condition is violated, the system will go into simulated surcharge before the highest pipe is flowing full.

Card Group 11: Orifice Cards

EXTRAN simulates orifices as equivalent pipes (see Chapter 5). Data entry is straightforward. For sump orifices, the program automatically sets the invert of the orifice one diameter below the junction invert so that the orifice is flowing full before there is any discharge (overflow) to conduits downstream of the junction containing the orifice.

Card Group 12: Weir Cards

The definition sketch for weirs is illustrated in Figure 6. The following types of weirs can be simulated:

- Internal diversions (from one junction to another via a transverse or sideflow weir.
- Outfall weirs which discharge to the receiving waters. These weirs may be transverse or sideflow types, and may be equipped with flap gates that prevent backflow.

Transverse weir and sideflow weirs are distinguished in EXTRAN by the value of the exponent to which the head on the weir is taken. For transverse weirs, head is taken to the 3/2 power (i.e., $Q_w \sim H^{3/2}$) while for sideflow weirs the exponent is 5/3 (i.e., $Q_w \sim H^{5/3}$).

When the water depth at the weir junction exceeds YTOP (see Figure 6) the weir functions as an orifice ($Q_w \sim H^{1/2}$). The discharge coefficient for the orifice flow condition is computed internally in EXTRAN (see Chapter 5).

Stability problems can be encountered at weir junctions if the junction surcharges during the simulation. If this happens or is suspected of happening, the weir may be represented as an equivalent pipe. To do this, equate the pipe and weir discharge equations, e.g.:

$$\frac{1.49}{n} AR^{2/3}S^{1/2} = C_w WH^{3/2} \qquad (7)$$

where:

n = Manning n for the pipe,
A = cross-sectional area,
R = hydraulic radius,
S = hydraulic grade line for the pipe,
H = head across the weir,
C_w = weir discharge coefficient,
W = weir length.

In this equation, $S = H/L$ where L is the pipe length, and $A = WH$. If R is set at the value of the hydraulic radius where the head is half way between YCREST and YTOP, and L is set in accordance with Equation 6, then n can be computed as:

$$n = \frac{R^{2/3}}{C_w L^{1/2}} \qquad (8)$$

for the equivalent pipe.

Card Group 13: Pump Cards

Pumps may be of two types:

1. An off-line pump station with a wet well; the rate of pumping depends upon the volume (level) of water in the wet well.

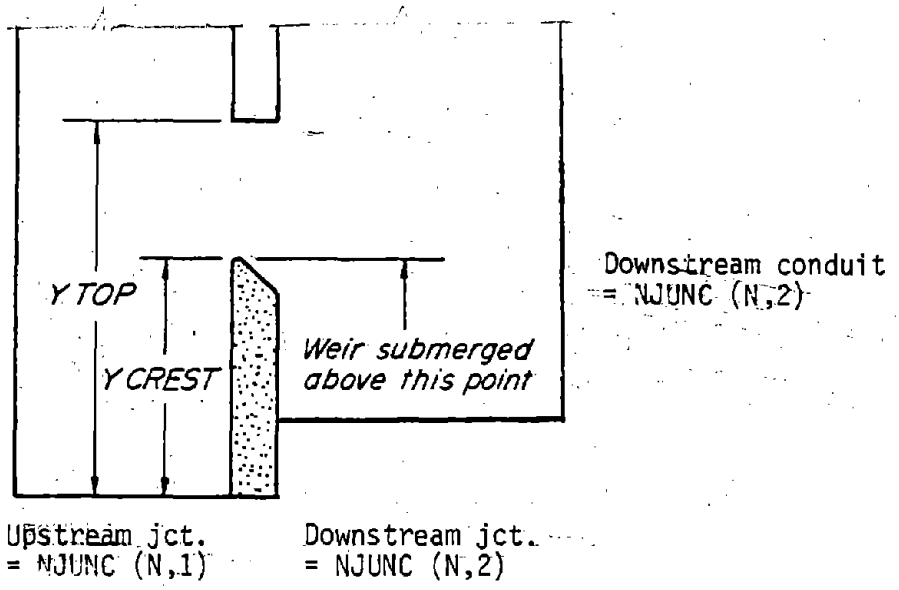

Figure 6. Definition sketch of weir input data.

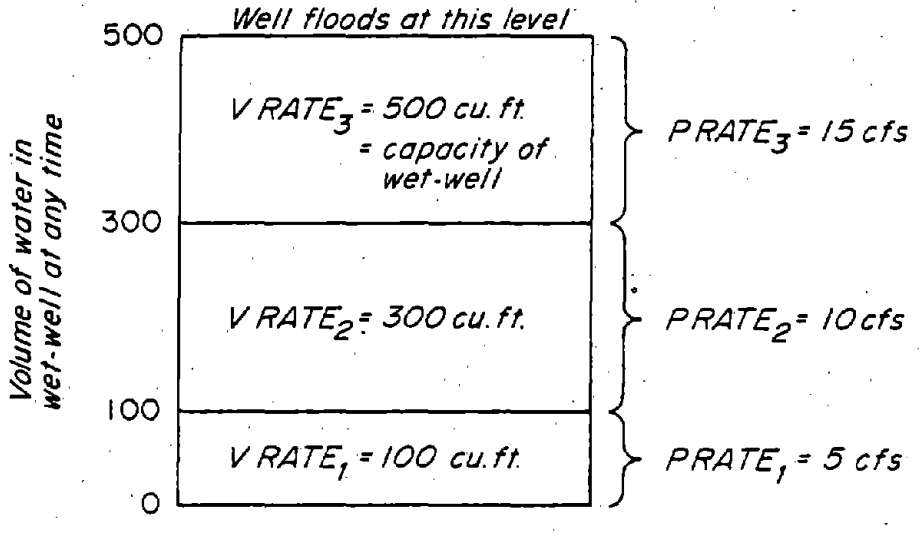

Figure 7. Definition sketch of pump input data.

2. An on-line lift station that pumps according to the level of the water surface at the junction being pumped.

The definition sketch in Figure 7 defines the input variable for Type 1 pump.

For a Type 2 pump station, the following operating rule is used:

$Y \leq VRATE(I,1)$	Q_p = Junction inflow or PRATE(I,1), whichever is less
$VRATE(I,1) < Y \leq VRATE(I,2)$	$Q_p = PRATE(I,2)$
$VRATE(I,2) < Y$	$Q_p = PRATE(I,3)$

Note that for a Type 2 pump station VRATE is the water depth at the pump junction, while for a Type 1 station it is the volume of water in the wet well.

Note also that only one conduit may be connected to a Type 1 pump station junction.

Card Group 14: Free Outfall Pipes

Three types of outfalls can be simulated in EXTRAN:

1. A weir outfall with or without a flap (tide) gate (Card Group 12),
2. A conduit outfall without a flap gate (Card Group 14), or
3. A conduit outfall with a flap (tide) gate (Card Group 15).

Under Card Group 14, enter the outfall junction number for outfall conduits without flap gates.

Card Group 15: Outfall Pipes With Flap Gates

Enter the outfall junction number for conduits with flap gates.

Card Groups 16, 17, and 18: Tidal Backwater Control Cards

Card Groups 16, 17, and 18 describe the single tidal backwater condition which is applied at all outfalls in the drainage system. The tidal index, NTIDE, is specified according to whether there is: (1) no water surface at any outfall; (2) a water surface at constant elevation; (3) a tide whose period and amplitude are described by user supplied tide coefficients; or (4) a tide which will be computed by EXTRAN using Equation 37 which is based on a specified number of stage-time points describing a single tidal cycle.

Card Groups 19 and 20: Initial Flows, Velocities, and Heads

Frequently, it is desired to initialize the drainage network with starting values of flow, velocity, and water surface elevation which represent either the dry weather or antecedent flow conditions just prior to the storm to be simulated. Card Groups 19 and 20 are designed for the purpose of supplying these initial conditions throughout the drainage system at the beginning of the simulation. Card Group 19 contains discharge for each conduit in the same order as it is specified in Card Group 9. Note that initial

discharge must be specified for all real conduits plus all internal links. (There is one internal link for each orifice, weir, pump, and outfall in the system. In a complex network, the total number of real plus internal conduits is best determined from the conduit connectivity summary in a trial run with EXTRAN.) As an example, in a system of 25 real conduits, 28 junctions, 2 orifices, 3 weirs, and 1 free outfall, we have a total of 31 links. The specification of initial discharges in Card Group 19 requires a total of 8 cards with 4 conduits on each. For the case where all flows and heads are zero at the start of the simulation, enter 99999. in columns 6 thru 10 of Card Group 19.

Similarly, initial depths of flow (not elevations) are keypunched according to the instruction in Card Group 20. Again the initial heads are supplied for all real and internal junctions. The latter are specified automatically by the EXTRAN program for each weir in the system. Thus in the example above, we would have a total of 31 junctions and the initial dry-weather heads would be punched on four cards in the order the junctions appear in Card Group 10.

Card Groups 21 and 22: Hydrograph Input Cards

EXTRAN provides for input of up to 20 inflow hydrographs by cards in cases where it is desirable to run EXTRAN alone without prior use of the Runoff Block or to add additional input hydrographs, either at the same or different nodes, to those computed by the Runoff Block. The specification of individual junctions receiving hydrograph input by cards is given in Card Group 21. Note that multiple hydrographs coming into a given junction can be indicated by repeating the junction number in Group 21 for each inflow hydrograph. The order of hydrograph time discharge points in Card Group 22 now must correspond exactly with the order specified by Card Group 21. The time, TEO, of each discharge point is given in decimal clock hours; i.e., 10:45 a.m. is punched as 10.75. Hydrograph time input points can be specified at any convenient time as long as a point is included for each junction specified in Card Group 21. The hydrographs are then formed by interpolating between consecutive time input points for each time step.

TABLE 1. EXTRAN DATA REQUIREMENTS

Card Group	Format	Card Columns	Description	Variable Name
			TAPE UNIT NUMBERS	
			NOTE: ONLY INCLUDE CARD GROUP 1 IF EXTRAN IS RUN STANDING ALONE. SKIP IF EXTRAN IS CALLED FROM THE EXECUTIVE BLOCK OF SWMM.	
1	2I5	1-5	Hydrograph input tape from Runoff Block	N21
		6-10	Outfall hydrograph tape for input to receive block	N22
			RUN TITLE	
2	20A4	1-60	Description of computer run (2 cards.) Will be printed on output (2 lines).	ALPHA
			RUN CONTROL PARAMETERS	
3	I5,2F5.0, 8I5,F5.0	1-5	Number of integration steps or time cycles desired	NTCYC
		6-10	Length of integration step, seconds	DELT
		11-15	Start time of simulation, decimal hours	TZERO
		16-20	Number of junctions for detailed printing of head output (20 nodes max.)	NHPRT
		21-25	Number of conduits for detailed printing of discharge output (20 pipes max.)	NQPRT
		26-30	Number of junctions to be plotted (20 max.)	NPLT
		31-35	Number of conduit flows to be plotted (20 max.)	LPLT
		36-40	First time-step to begin print cycle	NSTART

TABLE 1. EXTRAN DATA REQUIREMENTS
(Continued)

Card Group	Format	Card Columns	Description	Variable Name
3 (Continued)		41-45	Interval between print cycles (max. number of cycles printed is $\frac{NTCYC - NSTART}{INTER}$	INTER
		46-50	Number of input junctions, if card input hydrographs are used (65 max.)	NJSW
		51-55	Maximum number of iterations to adjust head and flow of surcharged junctions	ITMAX
		56-60	Segment of flow in surcharged areas to be used as the tolerance for ending surcharge iterations	SURTOL
			PRINTED HEADS	
4	8I10	1-10	First junction number for detailed printing	JPRT(1)
		11-20	Second junction number, up to number of nodes defined by NHPRT	JPRT(2)
			PRINTED FLOWS	
5	8I10	1-10	First conduit number for detailed printing	CPRT(1)
		11-20	Second conduit number up to number of nodes defined by NQPRT	CPRT(2)
			PLOTTED HEADS	
		NOTE:	IF NPLT = 0, SKIP THIS CARD GROUP	
6	8I10	1-10	First junction number for plotting	JPLT(1)
		11-20	Second junction number, up to number of nodes defined by NPLT	JPLT(2)
			PLOTTED FLOWS	
		NOTE:	IF LPLT = 0, SKIP THIS CARD GROUP	
7	8I10	1-10	First conduit number for plotting	KPLT(1)

TABLE 1. EXTRAN DATA REQUIREMENTS
(Continued)

Card Group	Format	Card Columns	Description	Variable Name
7 (Continued)		11-20	Second conduit number for plotting, up to number of nodes defined by LPLT (This option is for conduit flow rate)	KPLT(2)
			CONDUIT CARDS(1 CARD/CONDUIT, 187 MAX.)	
8	415, 9F5.0	1-5	Conduit number (none greater than 90000)	NCOND(N)
		6-10	Junction number at upstream end of conduit	NJUNC(N,1)
		11-15	Junction number at downstream end of conduit	NJUNC(N,2)
		16-20	Type of conduit shape 1 = circular 2 = rectangular 3 = horseshoe 4 = egge 5 = baskethandle 6 = trapezoid	NKLASS(N)
		21-25	Cross sectional area of conduit, sq. ft. (necessary only for types 3, 4, and 5)	AFULL(N)
		26-30	Vertical depth of conduit, ft.	DEEP(N)
		31-35	Maximum width of conduit, ft. Bottom width for trapezoid, ft.	WIDE(N)
		36-40	Length of conduit, ft.	LEN(N)
		41-45	Distance of conduit invert above junction invert at NJUNC(N,1)	ZP(N,1)
		46-50	Distance of conduit invert above junction invert at NJUNC(N,2)	ZP(N,2)
		51-55	Mannings coefficient (includes entrance and exit losses)	ROUGH(N)
		56-60	Slope of one side of trapezoid, (horizontal/vertical; 0=vertical)	STHETA(N)

TABLE 1. EXTRAN DATA REQUIREMENTS
(Continued)

Card Group	Format	Card Columns	Description	Variable Name
8 (Continued)		61-65	Slope on other side of trapezoid, (horizontal/vertical; 0=vertical)	SPHI(N)
			(Last card must have 99999 in columns 1 to 5)	
			JUNCTION CARDS (1 CARD/JUNCTION, 187 MAX.)	
9	I5, 3F5.0	1-5	Junction number (none greater than 90000)	JUN(J)
		6-10	Ground elevation, ft.	GRELEV(J)
		11-15	Invert elevation, ft.	Z(J)
		16-20	Net constant flow into junction, cfs (may be a negative number)	QINST(J)
			(Last card must have a 99999 in columns 1 to 5)	
			STORAGE JUNCTIONS (1 CARD/JUNCTION, 20 MAX.)	
		NOTE:	JUNCTION MUST BE IDENTIFIED IN JUNCTION DATA	
10	I5, 2F5.0	1-5	Junction containing storage facility	JSTORE(I)
		6-10	Junction crown elevation (must be higher than crown of highest pipe connected to storage facility)	ZCROWN(J)
		11-15	Storage volume per foot of depth (surface area), cu. ft/ft.	ASTORE(I)
			(Last card must have a 99999 in columns 1 to 5)	
			ORIFICE CARDS (1 CARD/ORIFICE, 60 MAX.)	
11	3I5, 3F5.0	1-5	Junction containing orifice	NJUNC(N,1)
		6-10	Junction to which orifice discharges	NJUNC(N,2)
		11-15	Type of orifice 1 = side outlet 2 = bottom outlet	NKLASS(N)

TABLE 1. EXTRAN DATA REQUIREMENTS
(Continued)

Card Group	Format	Card Columns	Description	Variable Name
11 (Continued)		16-20	Orifice area in sq. ft.	AORIF(I)
		21-25	Orifice discharge coefficient	CORIF(I)
		26-30	Distance of orifice invert above junction floor (define only for side outlet orifices)	ZP(I)
			(Last card must have 99999 in columns 1 to 5)	
			WEIR CARDS (1 CARD/WEIR, 60 MAX.)	
12	3I5, 4F5.0	1-5	Junction at which weir is located	NJUNC(N,1)
		6-10	Junction to which weir discharges NOTE: To designate outfall weir, set NJUNC(N,2) equal to zero	NJUNC(N,2)
		11-15	Type of weir 1 = transverse 2 = transverse with tide gates 3 = side flow 4 = side flow with tide gates	KWEIR(I)
		16-20	Height of weir crest above invert, ft.	YCREST(I)
		21-25	Height to top of weir opening above invert (surcharge level) ft.	YTOP(I)
		26-30	Weir length, ft.	WLEN(I)
		31-35	Coefficient of discharge for weir	COEF(I)
			(Last card must have 99999 in columns 1 to 5)	
			PUMP CARDS (1 CARD/PUMP, 20 MAX.)	
		NOTE:	ONLY ONE PIPE CAN BE CONNECTED TO A PUMP NODE	
13	3I5, 7F5.0	1-5	Junction being pumped	NJUNC(N,1)
		6-10	Pump discharge goes to this junction	NJUNC(N,2)

TABLE 1. EXTRAN DATA REQUIREMENTS
(Continued)

Card Group	Format	Card Columns	Description	Variable Name
13 (Continued)		11-15	Type of pump 1 = off-line pump with wet well 2 = on-line lift pump	IPTYP(I)
		16-20	Initial wet well volume, cu. ft. (enter 0 for type 2 pump)	VWELL(I)
		21-25	Lower pumping rate, cfs.	PRATE(I,1)
		26-30	Mid-pumping rate, cfs.	PRATE(I,2)
		31-35	High pumping rate, cfs.	PRATE(I,3)
		36-40	Wet well volume (or junction depth) for mid rate pumps to start, cu. ft. (or ft.)	VRATE(I,1)
		41-45	Wet well volume (or junction depth) for high rate pumps to start, cu. ft. (or ft.)	VRATE(I,2)
		46-50	Total wet well capacity, cu. ft. (enter 0 for type 2 pump)	VRATE(I,3)
		(Last card must have 99999 in columns 1 to 5)		
			OUTFALL PIPES W/O TIDE GATES (1 CARD OUTFALL, 25 MAX.)	
		NOTE:	ONLY ONE CONNECTING CONDUIT IS PERMITTED TO A FREE OUTFALL NODE	
14	I5	1-5	Junction for free outfall	JFREE(I)
		(Last card must have 99999 in columns 1 to 5)		
		OUTFALL PIPES WITH TIDE GATES (1 CARD OUTFALL, 25 MAX.)		
		NOTE:	ONLY ONE CONNECTING CONDUIT IS PERMITTED TO OUTFALL NODE	
15	I5	1-5	Junction at which gate is located	JGATE(1)
		(Last card must have 99999 in columns 1 to 5)		

TABLE 1. EXTRAN DATA REQUIREMENTS
(Continued)

Card Group	Format	Card Columns	Description	Variable Name
			1 CARD FOR TIDAL CONTROL	
16	I5, 8F5.0	1-5	Tide index: 1 = no water surface at outfalls 2 = outfall control water surface at constant elevation, A1 3 = tide coefficients provided 4 = program will compute tide coefficients	NTIDE
		6-10	First tide coefficient	A1
		NOTE:	COLUMNS 11-45 NOT REQUIRED UNLESS NTIDE = 3	
		11-15	Second tide coefficient	A2
		16-20	Third tide coefficient	A3
		21-25	Fourth tide coefficient	A4
		26-30	Fifth tide coefficient	A5
		31-35	Sixth tide coefficient	A6
		36-40	Seventh tide coefficient	A7
		41-45	Tidal period in hours	W
			REQUIRED IF NTIDE = 4	
17	3I5	1-5	If one, there are four information points, program will develop the coefficients	KO
		6-10	Number of information points (4 if KO above equals 1)	NI
		11-15	If one, will print information on tide coefficient development	NCHTID

TABLE 1. EXTRAN DATA REQUIREMENTS
(Continued)

Card Group	Format	Card Columns	Description	Variable Name
			REQUIRED IF NTIDE = 4	
18	8F10.0	1-10	Time, first information points	TT(1)
		11-20	Tidal stage, at time above	YY(1)
		21-30	Time, second information points	TT(2)
		31-40	Tidal stage, at time above, up to number of points as defined by NI	YY(2)
			INITIAL FLOWS	
19	8F10.0	1-10	Initial flows (cfs)	Q(1)
		11-20	Initial velocities (fps)	V(1)
		21-30	NOTE: IF ALL INITIAL FLOWS, VELOCITIES AND HEADS ARE ZERO, PUNCH	Q(2)
		31-40	99999. IN COLS. 1-10 OF FIRST CARD FOR Q(1). NO OTHER CARDS REQUIRED	V(2)
		41-50		
			(4 conduits per card, up to NTL conduits. Includes internal links.)	
			INITIAL DEPTHS	
20	8F10.0	1-10	Initial junction depth (ft.)	Y(1)
		11-20	NOTE: SKIP IF A 99999. HAS BEEN PUNCHED FOR Q(1) ABOVE.	Y(2)
			(8 junctions per card up to NJ junctions. Includes internal junctions.)	Y(NJ)

TABLE 1. EXTRAN DATA REQUIREMENTS
(Continued)

Card Group	Format	Card Columns	Description	Variable Name
			CARD HYDROGRAPHS	
			IF NJSW = 0, SKIP CARD GROUPS 20 and 21	
21	I6I5	1-5	First input node for card hydrograph	JSW(1)
		6-10	Second input node for card hydrograph	JSW(2)
		.		.
		.		.
		.		.
			REQUIRED IF NJSW $\geq$ 1	
22	8F10.0	1-10	Clock time, in decimal hours	TEO
		11-20	Flow rate, cfs., first input node, JSW(1)	QCARD(1,1)
		21-30	Flow rate, cfs., second input node, JSW(2), up to NJSW nodes	QCARD(2,1)
		.		.
		.		.
		.	(If more than one card is needed for each time, the next QCARD(N,1) should begin in Columns 1-10 of each subsequent card, 8 QCARD(N,1) per card up to QCARD(NJSW,1). Repeat with the same number of cards for each TEO with the final TEO greater than the end time of the run.)	.

CHAPTER 3

EXAMPLE PROBLEMS

INTRODUCTION

Seven test runs of EXTRAN have been made and are included in this report. They will demonstrate how to set up the input data sets for each of the flow diversions included in the model. The complete or partial results of these runs have also been included as an example of typical output and an aid in interpreting EXTRAN results.

EXAMPLE 1: BASIC PIPE SYSTEM

Figure 8 shows a typical system of conduits and channels conveying stormwater flow. In this system, which is used in all the example problems below, conduits are designated with four-digit numbers while junctions have been given five-digit numbers. There are three inflow hydrographs, which are read from cards, and one free outfall. Table 2 is the input data set for Example 1.

The complete output for Example 1 is found in Table 3. The first section is an echo of the input data and a listing of conduits created internally by EXTRAN to represent outfalls and diversion caused by weirs, orifices, and pumps.

The next section of the output is the intermediate printout. This lists system inflows as they are read by EXTRAN and gives the depth at each junction and flow in each conduit in the system at a user-input time interval. A junction in surcharge is indicated by printing an asterisk beside its depth. Also, if surcharge iterations are occurring at the time of the intermediate printout, EXTRAN prints the flow differential over all surcharged junctions and the number of iterations required. An asterisk beside a conduit flow indicates that the flow is the normal flow for the conduit. The intermediate print out ends with the printing of a continuity balance of the water passing through the system during the simulation. Printed outflows from junctions not designated as outfalls in the input data set are junctions which have flooded.

The final section of the output gives the time history of depths and flows for those junctions and conduits input by the user, as well as a summary for all junctions and conduits in the system. The output ends with the user-requested plots of junction heads and conduit flows.

EXAMPLE 2: TIDE GATE

Figure 9 shows the system simulated in Example 2, which is the basic pipe system with a tide gate at the outfall and a constant receiving water depth of 94.4 feet Two changes to the input data set, shown in Table 4, are required for this situation. These, shown in Table 4, are:

1. Placing the outfall junction number (10208) in Card Group 14; and
2. Changing NTIDE in Card Group 15 to 2 and inputing A1 = 94.4.

The summary statistics for this run are in Table 5.

EXAMPLE 3: SUMP ORIFICE DIVERSION

Example 3 uses a two foot diameter sump orifice to divert flow to junction 15009 in order to relieve the flooding upstream of junction 82309. A free outfall is also used in this example. Table 6 indicates that the sump orifice is inserted simply by changing Card Group 10 as shown. A summary of the results from this example is found in Table 7.

EXAMPLE 4: WEIR DIVERSION

A weir can also be used as a diversion structure to relieve the flooding upstream of junction 82309, a shown in Figure 11. Card Group 11 has been revised as shown in Table 8 in order to input the specifications for this weir. Summary results are shown in Table 9.

EXAMPLE 5: STORAGE FACILITY WITH SIDE OUTLET ORIFICE

Inclusion of a storage facility requires several changes to the basic pipe system. Figure 12 shows that a new junction, 82308, has been inserted to receive the outflow from the orifice in the storage facility. Table 10 shows that this requires a new junction in Card Group 8, the invert of which is set to that of conduit 1602. This change, however, also requires that the invert of junction 82309 be raised to that of conduit 8060. Table 2 shows that, for the basic pipe system, conduit 8060 is 2.2 feet (ZP(N,2) above the invert of junction 82309. Thus, the invert of 82308 is set at 112.3 feet (the original elevation of 82309), the invert of 82309 is 114.5 feet, and ZP(N,2) for 8060 is 0.0. Card Group 9 is revised to show the size of the storage facility, and Card Group 10 is changed to show the specifications of the two foot diameter size orifice. Table 11 gives the results of this example.

EXAMPLE 6: OFF-LINE PUMP STATION

Inclusion of an off-line pump station requires the addition of a junction to represent the wet-well and a conduit to divert the flow to it, as Figure 13 demonstrates. Examination of Card Groups 7 and 8 in Table 12 shows the specifications for junction 82310 and conduit 8061. The length and Manning's n of conduit 8061 shown here, though, have been altered for stability purposes to those of an equivalent pipe to the actual 8061, which is 20 feet long with an n of .015. Chapter 2 gives the details of the equivalent pipe transformation. Also, Card Group 12 now includes a card giving the pump specifications. Results from this example are found in Table 13.

EXAMPLE 7: IN-LINE PUMP STATION

The pump in Example 6 can be moved to junction 82309 to simulate an inline pump station. Figure 14 shows that this requires no alteration to the basic pipe system of Example 1. The only change to the input data set, shown in Table 14, is the pump card in Group 12. It should be noted, though, that the VWELL variables are now water elevations at junction 82309 rather than the volume of a wet-well. Results are found in Table 15.

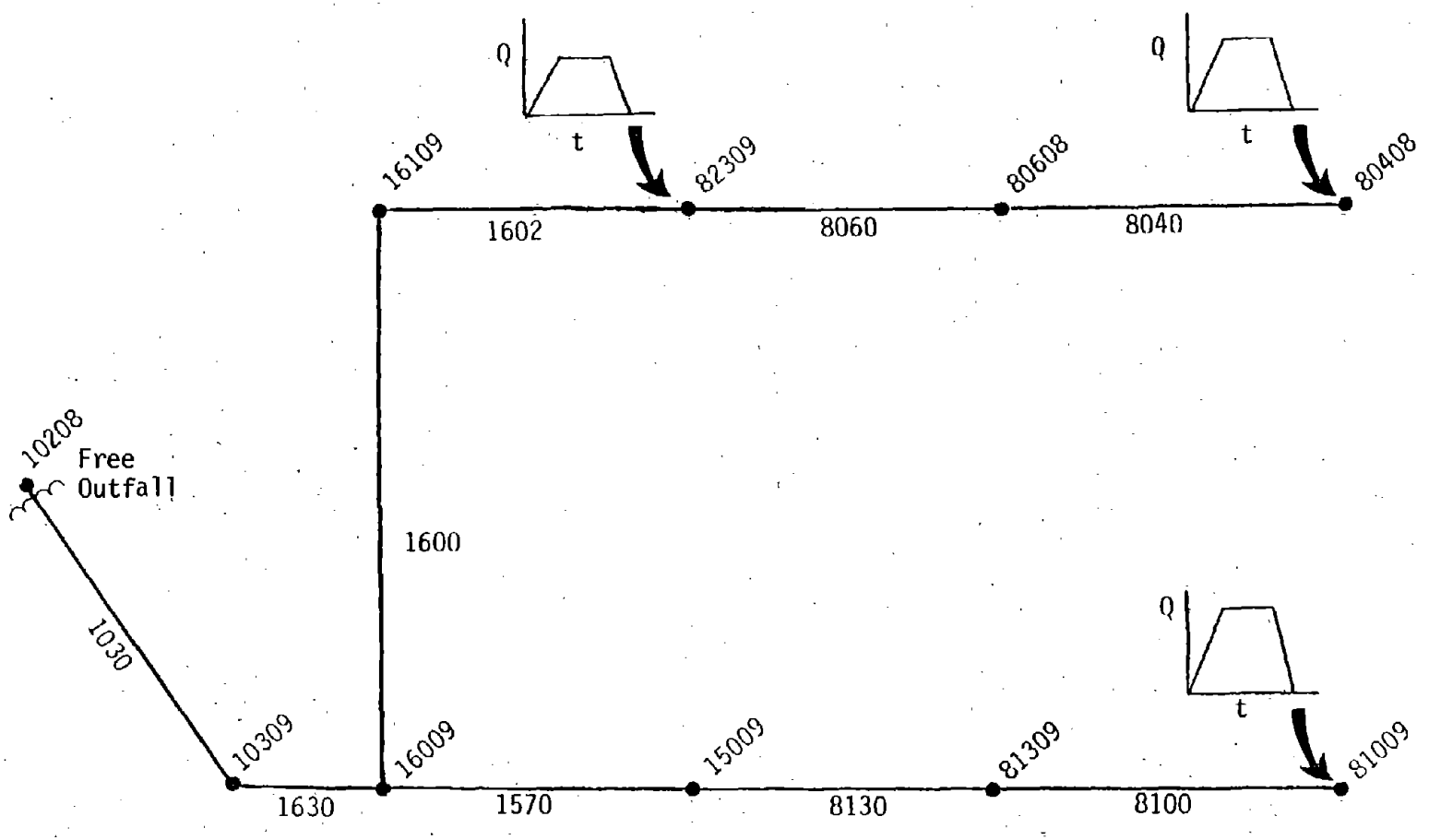

Figure 8. Basic system with free outfall.

TABLE 2

INPUT DATA SET FOR EXAMPLE 1

```
    0     0
EXTRAN USER'S MANUAL EXAMPLE PROBLEM 1
BASIC PIPE SYSTEM FROM FIGURE 8
 1440  20.    .0     6     6     6     6    45    45     3    30 0.05
      80608      16009      16109      15009      82309      80408
       1030       1630       1600       1602       1570       8130
      80608      16009      16109      15009      82309      80408
       1030       1630       1600       1602       1570       8130
 80408040880608     1       4.00      1800.            .015
 80608060882309     1       4.00      2075.      2.2   .015
 81008100981309     1       4.50      5100.            .015
 81308130915009     1       4.50      3500.            .015
 10301030910208     6       9.0       4500.            .016   3.    3.
 15701500916009     1       5.5       5000.           .0154
 16001600916109     1       6.0        500.            .015
 16301600910309     6       9.0        300.            .015   3.    3.
 16028230916109     1         5.      5000.            .034
99999
80408138.0124.6 0.0
80608135.0118.3  0.0
81009137.0128.2  0.0
81309130.0117.5  0.0
82309155.0112.3  0.0
10208100.0 89.9  0.0
10309111.0101.6  0.0
15009125.0111.5  0.0
16009120.0102.0  0.0
16109125.0102.8  0.0
99999
99999
99999
99999
99999
10208
99999
99999
    1
99999
823098040881009
0.0          0.0          0.0          0.0
0.25         40.0         45.0         50.0
3.0          40.0         45.0         50.0
3.25         0.0          0.0          0.0
12.0         0.0          0.0          0.0
```

TABLE 3

OUTPUT FROM EXAMPLE 1

```
ENVIRONMENTAL PROTECTION AGENCY          ****  EXTENDED TRANSPORT PROGRAM  ****      WATER RESOURCES DIVISION
WASHINGTON, D.C.                         ****                              ****      CAMP DRESSER & MCKEE INC.
                                         ****        ANALYSIS MODULE       ****      ANNANDALE, VIRGINIA
EXTRAN USER'S MANUAL EXAMPLE PROBLEM 1
BASIC PIPE SYSTEM FROM FIGURE 8


INTEGRATION CYCLES 1440

LENGTH OF INTEGRATION STEP IS   20. SECONDS

PRINTING STARTS IN CYCLE   45 AND PRINTS AT INTERVALS OF  45 CYCLES

INITIAL TIME. 0.00 HOURS

PRINTED OUTPUT AT THE FOLLOWING  6 JUNCTIONS

            80608     16009     16109     15009     82309     80408

         AND FOR THE FOLLOWING  6 CONDUITS

             1030      1630      1600      1602      1570      8130

WATER SURFACE ELEVATIONS WILL BE PLOTTED FOR THE FOLLOWING    6 JUNCTIONS

            80608     16009     16109     15009     82309     80408

FLOW RATE WILL BE PLOTTED FOR THE FOLLOWING    6 CONDUITS

             1030      1630      1600      1602      1570      8130
```

ENVIRONMENTAL PROTECTION AGENCY **** EXTENDED TRANSPORT PROGRAM **** WATER RESOURCES DIVISION
WASHINGTON, D.C. **** **** CAMP DRESSER & MCKEE INC.
**** ANALYSIS MODULE **** ANNANDALE, VIRGINIA

EXTRAN USER'S MANUAL EXAMPLE PROBLEM 1
BASIC PIPE SYSTEM FROM FIGURE 8

	CONDUIT NUMBER	LENGTH (FT)	CLASS	AREA (SQ FT)	MANNING COEF.	MAX WIDTH (FT)	DEPTH (FT)	JUNCTIONS AT ENDS	INVERT HEIGHT ABOVE JUNCTIONS	TRAPEZOID SIDE SLOPE
1	8040	1800.	1	12.57	0.015	4.00	4.00	80408 80608		
2	8060	2075.	1	12.57	0.015	4.00	4.00	80608 82309	0.00 2.20	
3	8100	5100.	1	15.90	0.015	4.50	4.50	81009 81309		
4	8130	3500.	1	15.90	0.015	4.50	4.50	81309 15009		
5	1030	4500.	6	243.00	0.016	0.01	9.00	10309 10208		3.00 3.00
6	1570	5000.	1	23.76	0.015	5.50	5.50	15009 16009		
7	1600	500.	1	28.27	0.015	6.00	6.00	16009 16109		
8	1630	300.	6	243.00	0.015	0.01	9.00	16009 10309		3.00 3.00
9	1602	5000.	1	19.63	0.034	5.00	5.00	82309 16109		

**** WARNING **** (C*DELT/LEN) IN CONDUIT 1630 IS 1.1 AT FULL DEPTH.

ENVIRONMENTAL PROTECTION AGENCY
WASHINGTON, D.C.

**** EXTENDED TRANSPORT PROGRAM ****
**** ANALYSIS MODULE ****

WATER RESOURCES DIVISION
CAMP DRESSER & MCKEE INC.
ANNANDALE, VIRGINIA

EXTRAN USER'S MANUAL EXAMPLE PROBLEM 1
BASIC PIPE SYSTEM FROM FIGURE 8

	JUNCTION NUMBER	GROUND ELEV.	CROWN ELEV.	INVERT ELEV.	QINST (CFS)	CONNECTING CONDUITS		
1	80408	138.00	128.60	124.60	0.00	8040		
2	80608	135.00	122.30	118.30	0.00	8040	8060	
3	81009	137.00	132.70	128.20	0.00	8100		
4	81309	130.00	122.00	117.50	0.00	8100	8130	
5	82309	155.00	118.50	112.30	0.00	8060	1602	
6	10208	100.00	98.90	89.90	0.00	1030		
7	10309	111.00	110.60	101.60	0.00	1030	1630	
8	15009	125.00	117.00	111.50	0.00	8130	1570	
9	16009	120.00	111.00	102.00	0.00	1570	1600	1630
10	16109	125.00	108.80	102.80	0.00	1600	1602	

---------- FREE OUTFALL DATA ----------

FREE OUTFLOW AT JUNCTIONS 10208

```
ENVIRONMENTAL PROTECTION AGENCY          ****  EXTENDED TRANSPORT PROGRAM  ****      WATER RESOURCES DIVISION
WASHINGTON, D.C.                         ****                              ****      CAMP DRESSER & MCKEE INC.
                                         ****        ANALYSIS MODULE       ****      ANNANDALE, VIRGINIA
EXTRAN USER'S MANUAL EXAMPLE PROBLEM 1
BASIC PIPE SYSTEM FROM FIGURE 8
```

- INTERNAL CONNECTIVITY INFORMATION -

CONDUIT	JUNCTION	JUNCTION
90010	10208	0

```
ENVIRONMENTAL PROTECTION AGENCY          ****  EXTENDED TRANSPORT PROGRAM   ****      WATER RESOURCES DIVISION
WASHINGTON, D.C.                         ****                               ****      CAMP DRESSER & MCKEE INC.
                                         ****        ANALYSIS MODULE        ****      ANNANDALE, VIRGINIA
EXTRAN USER'S MANUAL EXAMPLE PROBLEM 1
BASIC PIPE SYSTEM FROM FIGURE 8

--------------------- SUMMARY OF INITIAL HEADS, FLOWS AND VELOCITIES ---------------------


INITIAL HEADS, FLOWS AND VELOCITIES ARE ZERO
```

```
ENVIRONMENTAL PROTECTION AGENCY          ****  EXTENDED TRANSPORT PROGRAM  ****      WATER RESOURCES DIVISION
WASHINGTON, D.C.                         ****                              ****      CAMP DRESSER & MCKEE INC.
                                         ****        ANALYSIS MODULE       ****      ANNANDALE, VIRGINIA
EXTRAN USER'S MANUAL EXAMPLE PROBLEM 1
BASIC PIPE SYSTEM FROM FIGURE 8


****** SYSTEM INFLOWS (CARDS) AT    0.00 HOURS FOR    3 JUNCTIONS

82309/   0.00   80408/   0.00   81009/   0.00

****** SYSTEM INFLOWS (CARDS) AT    0.25 HOURS    ( JUNCTION / INFLOW,CFS )

82309/  40.00   80408/  45.00   81009/  50.00
- - - -
```

16009/ 0.55 16109/ 2.05

CONDUITS / FLOWS

8040/ 45.01% 8060/ 8.34 8100/ 54.64 8130/ 13.33 1030/ 0.00 1570/ 1.08% 1600/ 20.74 1630/ 0.51

1602/ 47.72 90010/ 0.00

- - - -

CONDUITS / FLOWS

8040/ 45.00 8060/ 29.32 8100/ 50.02% 8130/ 53.80 1030/ 97.16 1570/ 52.17% 1600/ 67.35 1630/ 113.23

1602/ 69.33 90010/ 97.16

- - - -

8040/ 45.00 8060/ 30.56 8100/ 50.00% 8130/ 50.09 1030/ 120.08 1570/ 50.43% 1600/ 70.48 1630/ 120.69
1602/ 70.56 90010/ 120.08

CYCLE 405 TIME 2 HRS - 15.00 MIN

JUNCTIONS / DEPTHS

80408/ 12.75% 80608/ 16.70% 81009/ 2.62 81309/ 3.05 82309/ 21.45% 10208/ 0.53 10309/ 4.22 15009/ 2.44
16009/ 3.87 16109/ 3.39

CONDUITS / FLOWS

8040/ 45.00 8060/ 30.58 8100/ 50.00% 8130/ 49.97 1030/ 120.51 1570/ 50.09% 1600/ 70.57 1630/ 120.62
1602/ 70.58 90010/ 120.51

CYCLE 450 TIME 2 HRS - 30.00 MIN

JUNCTIONS / DEPTHS

80408/ 12.75% 80608/ 16.70% 81009/ 2.62 81309/ 3.05 82309/ 21.45% 10208/ 0.53 10309/ 4.22 15009/ 2.44
16009/ 3.87 16109/ 3.39

CONDUITS / FLOWS

8040/ 45.00 8060/ 30.59 8100/ 50.00% 8130/ 49.97 1030/ 120.57 1570/ 49.99% 1600/ 70.59 1630/ 120.58
1602/ 70.59 90010/ 120.57

CYCLE 495 TIME 2 HRS - 45.00 MIN

JUNCTIONS / DEPTHS

80408/ 12.75% 80608/ 16.70% 81009/ 2.62 81309/ 3.05 82309/ 21.45% 10208/ 0.53 10309/ 4.22 15009/ 2.44
16009/ 3.87 16109/ 3.39

CONDUITS / FLOWS

8040/ 45.00 8060/ 30.59 8100/ 50.00% 8130/ 49.98 1030/ 120.57 1570/ 49.98% 1600/ 70.59 1630/ 120.57

1602/ 70.59 90010/ 120.57

****** SYSTEM INFLOWS (CARDS) AT 3.25 HOURS (JUNCTION / INFLOW,CFS)

82309/ 0.00 80408/ 0.00 81009/ 0.00

CYCLE 540 TIME 3 HRS - 0.00 MIN

JUNCTIONS / DEPTHS

80408/ 12.75* 80608/ 16.70* 81009/ 2.62 81309/ 3.05 82309/ 21.45* 10208/ 0.53 10309/ 4.22 15009/ 2.44

16009/ 3.87 16109/ 3.39

CONDUITS / FLOWS

8040/ 45.00 8060/ 30.59 8100/ 50.00* 8130/ 49.99 1030/ 120.57 1570/ 49.99* 1600/ 70.59 1630/ 120.58

1602/ 70.59 90010/ 120.57

****** SYSTEM INFLOWS (CARDS) AT 12.00 HOURS (JUNCTION / INFLOW,CFS)

82309/ 0.00 80408/ 0.00 81009/ 0.00

CYCLE 585 TIME 3 HRS - 15.00 MIN

JUNCTIONS / DEPTHS

80408/ 0.89 80608/ 2.59 81009/ 1.56 81309/ 2.61 82309/ 5.89 10208/ 0.52 10309/ 4.11 15009/ 2.36

16009/ 3.75 16109/ 3.12

CONDUITS / FLOWS

8040/ 8.38* 8060/ 41.03* 8100/ 20.51* 8130/ 41.93 1030/ 111.64 1570/ 47.45* 1600/ 48.45 1630/ 99.70

1602/ 47.22 90010/ 111.64

CYCLE 630 TIME 3 HRS - 30.00 MIN

JUNCTIONS / DEPTHS

80408/ 0.21 80608/ 0.83 81009/ 0.71 81309/ 1.61 82309/ 3.80 10208/ 0.49 10309/ 3.87 15009/ 1.93
16009/ 3.50 16109/ 2.85

CONDUITS / FLOWS

8040/ 0.43% 8060/ 5.11% 8100/ 4.32% 8130/ 19.60% 1030/ 95.20 1570/ 32.78% 1600/ 40.76 1630/ 79.89
1602/ 35.03 90010/ 95.20

CYCLE 675 TIME 3 HRS - 45.00 MIN

JUNCTIONS / DEPTHS

80408/ 0.10 80608/ 0.44 81009/ 0.43 81309/ 1.06 82309/ 2.32 10208/ 0.45 10309/ 3.49 15009/ 1.42
16009/ 3.12 16109/ 2.41

CONDUITS / FLOWS

8040/ 0.11% 8060/ 0.88 8100/ 1.55% 8130/ 8.62% 1030/ 72.33 1570/ 18.17% 1600/ 27.00 1630/ 53.68
1602/ 19.29% 90010/ 72.33

CYCLE 720 TIME 4 HRS - 0.00 MIN

JUNCTIONS / DEPTHS

80408/ 0.06 80608/ 0.33 81009/ 0.30 81309/ 0.75 82309/ 1.44 10208/ 0.41 10309/ 3.05 15009/ 1.07
16009/ 2.67 16109/ 1.93

CONDUITS / FLOWS

8040/ 0.05% 8060/ 0.45 8100/ 0.72% 8130/ 4.33% 1030/ 50.49 1570/ 10.21% 1600/ 14.68 1630/ 33.37
1602/ 7.90% 90010/ 50.49

- - - -

CYCLE 900 TIME 5 HRS - 0.00 MIN

JUNCTIONS / DEPTHS

80408/ 0.01 80608/ 0.16 81009/ 0.12 81309/ 0.30 82309/ 0.49 10208/ 0.19 10309/ 1.81 15009/ 0.46
16009/ 1.44 16109/ 0.68

CONDUITS / FLOWS

8040/ 0.01% 8060/ 0.07 8100/ 0.11% 8130/ 0.66% 1030/ 11.96 1570/ 1.77% 1600/ 2.85 1630/ 7.57
1602/ 0.87% 90010/ 11.96

CYCLE 945 TIME 5 HRS - 15.00 MIN

JUNCTIONS / DEPTHS

80408/ 0.01 80608/ 0.14 81009/ 0.10 81309/ 0.26 82309/ 0.41 10208/ 0.14 10309/ 1.63 15009/ 0.39
16009/ 1.26 16109/ 0.51

CONDUITS / FLOWS

8040/ 0.00% 8060/ 0.06 8100/ 0.09% 8130/ 0.47% 1030/ 8.87 1570/ 1.29% 1600/ 2.02 1630/ 5.61
1602/ 0.59% 90010/ 8.87

CYCLE 990 TIME 5 HRS - 30.00 MIN

JUNCTIONS / DEPTHS

80408/ 0.01 80608/ 0.12 81009/ 0.08 81309/ 0.22 82309/ 0.35 10208/ 0.11 10309/ 1.48 15009/ 0.34
16009/ 1.11 16109/ 0.38

CONDUITS / FLOWS

8040/ 0.00% 8060/ 0.05 8100/ 0.07% 8130/ 0.34% 1030/ 6.73 1570/ 0.97% 1600/ 1.22% 1630/ 4.12
1602/ 0.43% 90010/ 6.73

CYCLE 1035 TIME 5 HRS - 45.00 MIN

JUNCTIONS / DEPTHS

80408/ 0.01 80608/ 0.11 81009/ 0.07 81309/ 0.20 82309/ 0.30 10208/ 0.08 10309/ 1.35 15009/ 0.30
16009/ 0.98 16109/ 0.30

CONDUITS / FLOWS

8040/ 0.00% 8060/ 0.04 8100/ 0.05% 8130/ 0.26% 1030/ 5.16 1570/ 0.73% 1600/ 0.76% 1630/ 3.08
1602/ 0.32% 90010/ 5.16

CYCLE 1080 TIME 6 HRS - 0.00 MIN

JUNCTIONS / DEPTHS

80408/ 0.01 80608/ 0.10 81009/ 0.06 81309/ 0.18 82309/ 0.26 10208/ 0.06 10309/ 1.24 15009/ 0.26
16009/ 0.87 16109/ 0.26

CONDUITS / FLOWS

8040/ 0.00% 8060/ 0.03 8100/ 0.04% 8130/ 0.20% 1030/ 4.01 1570/ 0.56% 1600/ 0.51% 1630/ 2.37
1602/ 0.23 90010/ 4.01

CYCLE 1125 TIME 6 HRS - 15.00 MIN

JUNCTIONS / DEPTHS

80408/ 0.00 80608/ 0.09 81009/ 0.05 81309/ 0.16 82309/ 0.23 10208/ 0.05 10309/ 1.14 15009/ 0.24
16009/ 0.77 16109/ 0.22

CONDUITS / FLOWS

8040/ 0.00% 8060/ 0.03 8100/ 0.03% 8130/ 0.17% 1030/ 3.17 1570/ 0.44% 1600/ 0.38% 1630/ 1.86
1602/ 0.17 90010/ 3.17

CYCLE 1170 TIME 6 HRS - 30.00 MIN

JUNCTIONS / DEPTHS

80408/ 0.00 80608/ 0.08 81009/ 0.05 81309/ 0.14 82309/ 0.21 10208/ 0.04 10309/ 1.05 15009/ 0.21
16009/ 0.68 16109/ 0.19

CONDUITS / FLOWS

8040/ 0.00% 8060/ 0.03 8100/ 0.03% 8130/ 0.15% 1030/ 2.54 1570/ 0.35% 1600/ 0.30% 1630/ 1.50
1602/ 0.13 90010/ 2.54

CYCLE 1215 TIME 6 HRS - 45.00 MIN

JUNCTIONS / DEPTHS

80408/ 0.00 80608/ 0.08 81009/ 0.04 81309/ 0.13 82309/ 0.19 10208/ 0.03 10309/ 0.98 15009/ 0.20
16009/ 0.61 16109/ 0.17

CONDUITS / FLOWS

8040/ 0.00% 8060/ 0.02 8100/ 0.02% 8130/ 0.13% 1030/ 2.07 1570/ 0.31% 1600/ 0.24% 1630/ 1.24
1602/ 0.11 90010/ 2.07

CYCLE 1260 TIME 7 HRS - 0.00 MIN

JUNCTIONS / DEPTHS

80408/ 0.00 80608/ 0.07 81009/ 0.04 81309/ 0.12 82309/ 0.18 10208/ 0.03 10309/ 0.91 15009/ 0.18
16009/ 0.53 16109/ 0.15

CONDUITS / FLOWS

8040/ 0.00% 8060/ 0.02 8100/ 0.02% 8130/ 0.11% 1030/ 1.72 1570/ 0.27% 1600/ 0.20% 1630/ 1.03
1602/ 0.09 90010/ 1.72

CYCLE 1305 TIME 7 HRS - 15.00 MIN

JUNCTIONS / DEPTHS

80408/ 0.00 80608/ 0.07 81009/ 0.03 81309/ 0.11 82309/ 0.17 10208/ 0.02 10309/ 0.85 15009/ 0.17

16009/ 0.50 16109/ 0.13

CONDUITS / FLOWS

8040/ 0.00% 8060/ 0.02 8100/ 0.02% 8130/ 0.09% 1030/ 1.44 1570/ 0.23% 1600/ 0.17% 1630/ 0.87

1602/ 0.08 90010/ 1.44

CYCLE 1350 TIME 7 HRS - 30.00 MIN

JUNCTIONS / DEPTHS

80408/ 0.00 80608/ 0.06 81009/ 0.03 81309/ 0.10 82309/ 0.16 10208/ 0.02 10309/ 0.80 15009/ 0.15

16009/ 0.45 16109/ 0.12

CONDUITS / FLOWS

8040/ 0.00% 8060/ 0.02 8100/ 0.01% 8130/ 0.08% 1030/ 1.21 1570/ 0.20% 1600/ 0.14% 1630/ 0.74

1602/ 0.07 90010/ 1.21

CYCLE 1395 TIME 7 HRS - 45.00 MIN

JUNCTIONS / DEPTHS

80408/ 0.00 80608/ 0.06 81009/ 0.03 81309/ 0.09 82309/ 0.15 10208/ 0.02 10309/ 0.76 15009/ 0.14

16009/ 0.41 16109/ 0.11

CONDUITS / FLOWS

8040/ 0.00% 8060/ 0.01 8100/ 0.01% 8130/ 0.07% 1030/ 1.03 1570/ 0.18% 1600/ 0.12% 1630/ 0.61%

1602/ 0.06 90010/ 1.03

CYCLE 1440 TIME 8 HRS - 0.00 MIN

JUNCTIONS / DEPTHS

80408/ 0.00 80608/ 0.05 81009/ 0.02 81309/ 0.09 82309/ 0.14 10208/ 0.01 10309/ 0.71 15009/ 0.13

16009/ 0.38 16109/ 0.10

CONDUITS / FLOWS

8040/ 0.00% 8060/ 0.01 8100/ 0.01% 8130/ 0.07% 1030/ 0.88 1570/ 0.16% 1600/ 0.11% 1630/ 0.49%

1602/ 0.06 90010/ 0.88

---------- CONTINUITY BALANCE AT END OF RUN ----------

TOTAL SYSTEM INFLOW VOLUME = 1458000. CU FT

JUNCTION OUTFLOWS AND
STREET FLOODING

JUNCTION	OUTFLOW, FT3
80408	585.
80608	136037.
10208	1328008.
TOTAL	1464631. CU FT

VOLUME LEFT IN SYSTEM = 7902. CU FT

ERROR IN CONTINUITY, PERCENT = -1.00

ENVIRONMENTAL PROTECTION AGENCY
WASHINGTON, D.C.

EXTENDED TRANSPORT PROGRAM
ANALYSIS MODULE

WATER RESOURCES DIVISION
CAMP DRESSER & MCKEE INC.
ANNANDALE, VIRGINIA

EXTRAN USER'S MANUAL EXAMPLE PROBLEM 1
BASIC PIPE SYSTEM FROM FIGURE 8

TIME HISTORY OF H. G. L.
(VALUES IN FEET)

TIME	JUNCTION80608 GRND 135.00		JUNCTION16009 GRND 120.00		JUNCTION16109 GRND 125.00		JUNCTION15009 GRND 125.00		JUNCTION82309 GRND 155.00		JUNCTION80408 GRND 138.00	
HR . MIN	ELEV	DEPTH	ELEV	DEPTH	ELEV	DEPTH	ELEV	DEPTH	ELEV	DEPTH	ELEV	DEPTH
0.15	120.00	1.70	102.00	0.00	102.97	0.17	111.50	0.00	114.53	2.23	127.20	2.60
0.30	122.12	3.82	102.55	0.55	104.85	2.05	111.87	0.37	121.87	6.20	126.86	2.26
0.45	135.00	4.00	104.68	2.68	105.68	2.88	112.97	1.47	133.75	6.20	137.35	4.00
1. 0	135.00	4.00	105.10	3.10	105.67	2.87	113.77	2.27	133.95	6.20	137.35	4.00
1.15	135.00	4.00	105.55	3.55	105.93	3.13	114.00	2.50	133.84	6.20	137.35	4.00
1.30	135.00	4.00	105.76	3.76	106.10	3.30	114.00	2.50	133.78	6.20	137.35	4.00
1.45	135.00	4.00	105.84	3.84	106.17	3.37	113.97	2.47	133.76	6.20	137.35	4.00
2. 0	135.00	4.00	105.86	3.86	106.19	3.39	113.95	2.45	133.75	6.20	137.35	4.00
2.15	135.00	4.00	105.87	3.87	106.19	3.39	113.94	2.44	133.75	6.20	137.35	4.00
2.30	135.00	4.00	105.87	3.87	106.19	3.39	113.94	2.44	133.75	6.20	137.35	4.00
2.45	135.00	4.00	105.87	3.87	106.19	3.39	113.94	2.44	133.75	6.20	137.35	4.00
3. 0	135.00	4.00	105.87	3.87	106.19	3.39	113.94	2.44	133.75	6.20	137.35	4.00
3.15	120.89	2.59	105.75	3.75	105.92	3.12	113.36	2.36	118.19	5.89	125.49	0.89
3.30	119.13	0.83	105.50	3.50	105.65	2.85	113.43	1.93	116.10	3.80	124.81	0.21
3.45	118.74	0.44	105.12	3.12	105.21	2.41	112.92	1.42	114.62	2.32	124.70	0.10
4. 0	118.63	0.33	104.67	2.67	104.73	1.93	112.57	1.07	113.74	1.44	124.66	0.06
4.15	118.55	0.25	104.26	2.26	104.31	1.51	112.33	0.83	113.31	1.01	124.64	0.04
4.30	118.51	0.21	103.92	1.92	103.97	1.17	112.16	0.66	113.06	0.76	124.63	0.03
4.45	118.48	0.18	103.65	1.65	103.69	0.89	112.05	0.55	112.90	0.60	124.62	0.02
5. 0	118.46	0.16	103.44	1.44	103.48	0.68	111.96	0.46	112.79	0.49	124.61	0.01
5.15	118.44	0.14	103.26	1.26	103.31	0.51	111.89	0.39	112.71	0.41	124.61	0.01
5.30	118.42	0.12	103.11	1.11	103.18	0.38	111.84	0.34	112.65	0.35	124.61	0.01
5.45	118.41	0.11	102.98	0.98	103.10	0.30	111.80	0.30	112.60	0.30	124.61	0.01
6. 0	118.40	0.10	102.87	0.87	103.06	0.26	111.76	0.26	112.56	0.26	124.61	0.01
6.15	118.39	0.09	102.77	0.77	103.02	0.22	111.74	0.24	112.53	0.23	124.60	0.00
6.30	118.38	0.08	102.68	0.68	102.99	0.19	111.71	0.21	112.51	0.21	124.60	0.00
6.45	118.38	0.08	102.61	0.61	102.97	0.17	111.70	0.20	112.49	0.19	124.60	0.00
7. 0	118.37	0.07	102.55	0.55	102.95	0.15	111.68	0.18	112.48	0.18	124.60	0.00
7.15	118.37	0.07	102.50	0.50	102.93	0.13	111.67	0.17	112.47	0.17	124.60	0.00
7.30	118.36	0.06	102.45	0.45	102.92	0.12	111.65	0.15	112.46	0.16	124.60	0.00
7.45	118.36	0.06	102.41	0.41	102.91	0.11	111.64	0.14	112.45	0.15	124.60	0.00
8. 0	118.35	0.05	102.38	0.38	102.90	0.10	111.63	0.13	112.44	0.14	124.60	0.00

ENVIRONMENTAL PROTECTION AGENCY
WASHINGTON, D.C.

**** EXTENDED TRANSPORT PROGRAM ****
**** ANALYSIS MODULE ****

WATER RESOURCES DIVISION
CAMP DRESSER & MCKEE INC.
ANNANDALE, VIRGINIA

EXTRAN USER'S MANUAL EXAMPLE PROBLEM 1
BASIC PIPE SYSTEM FROM FIGURE 8

SUMMARY STATISTICS FOR JUNCTIONS

JUNCTION NUMBER	GROUND ELEVATION (FT)	UPPERMOST PIPE CROWN ELEVATION (FT)	MAXIMUM COMPUTED DEPTH (FT)	TIME OF OCCURENCE HR.	TIME OF OCCURENCE MIN.	FEET OF SURCHARGE AT MAX. DEPTH	FEET MAX. DEPTH IS BELOW GROUND ELEVATION	LENGTH OF SURCHARGE (MIN)
80408	138.00	128.60	13.40	0	32	9.40	0.00	153.0
80608	135.00	122.30	16.70	0	30	12.70	0.00	159.3
81009	137.00	132.70	3.36	0	27	0.00	5.44	0.0
81309	130.00	122.00	3.56	0	51	0.00	8.94	0.0
82309	155.00	118.50	21.68	0	33	15.48	21.02	165.3
10208	100.00	98.90	0.53	3	1	0.00	9.57	0.0
10309	111.00	110.60	4.22	3	1	0.00	5.18	0.0
15009	125.00	117.00	2.51	1	22	0.00	10.99	0.0
16009	120.00	111.00	3.87	3	0	0.00	14.13	0.0
16109	125.00	108.80	3.39	3	0	0.00	18.81	0.0

ENVIRONMENTAL PROTECTION AGENCY
WASHINGTON, D.C.

EXTRAN USER'S MANUAL EXAMPLE PROBLEM 1
BASIC PIPE SYSTEM FROM FIGURE 8

**** EXTENDED TRANSPORT PROGRAM ****
**** ANALYSIS MODULE ****

WATER RESOURCES DIVISION
CAMP DRESSER & MCKEE INC.
ANNANDALE, VIRGINIA

********** TIME HISTORY OF FLOW AND VELOCITY **********

Q(CFS), VEL(FPS)

TIME	CONDUIT 1030		CONDUIT 1630		CONDUIT 1600		CONDUIT 1602		CONDUIT 1570		CONDUIT 8130	
HR : MIN	FLOW	VEL	FLOW	VEL	FLOW	VEL	FLOW	VEL	FLOW	VEL	FLOW	VEL
0.15	0.00	0.2	0.00	0.2	0.09	0.6	6.33	1.6	0.00	0.3	0.25	1.0
0.30	0.00	0.3	0.51	1.3	20.74	4.3	47.72	2.9	1.08	1.1	13.33	3.5
0.45	21.08	3.5	88.59	5.0	69.12	5.4	68.02	3.9	18.93	2.2	44.19	5.0
1. 0	68.44	4.7	98.88	3.1	66.70	4.8	67.98	3.9	43.73	3.8	54.64	5.1
1.15	97.16	5.2	113.23	2.7	67.35	4.2	69.33	3.9	52.17	3.9	53.80	5.0
1.30	112.26	5.4	119.11	2.6	69.26	4.0	70.14	3.9	52.40	3.8	51.72	5.0
1.45	118.23	5.4	120.54	2.5	70.16	4.0	70.46	3.9	51.23	3.6	50.54	4.9
2. 0	120.08	5.4	120.69	2.5	70.48	3.9	70.56	3.9	50.43	3.6	50.09	4.9
2.15	120.51	5.5	120.62	2.5	70.57	3.9	70.58	3.9	50.09	3.6	49.97	4.9
2.30	120.57	5.5	120.58	2.5	70.59	3.9	70.59	3.9	49.99	3.6	49.97	4.9
2.45	120.57	5.5	120.57	2.4	70.59	3.9	70.59	3.9	49.98	3.6	49.98	4.9
3. 0	120.57	5.5	120.58	2.4	70.59	3.9	70.59	3.9	49.99	3.6	49.99	4.9
3.15	111.64	5.3	99.70	2.1	48.45	2.9	47.22	2.7	47.45	3.5	41.93	4.7
3.30	95.20	5.1	79.89	2.0	40.76	2.7	35.03	2.5	32.78	2.8	19.60	3.4
3.45	72.33	4.8	53.68	1.6	27.00	2.1	19.29	2.1	18.17	2.0	8.62	2.4
4. 0	50.49	4.4	33.37	1.4	14.68	1.5	7.90	1.4	10.21	1.4	4.33	1.9
4.15	34.73	4.0	22.09	1.2	9.14	1.2	3.90	1.0	6.10	1.1	2.42	1.5
4.30	24.37	3.6	15.25	1.1	6.09	1.0	2.19	0.8	3.84	0.9	1.47	1.3
4.45	16.76	3.3	10.60	1.0	4.12	0.9	1.33	0.7	2.58	0.7	0.94	1.1
5. 0	11.96	3.0	7.57	1.0	2.85	0.8	0.87	0.7	1.77	0.6	0.66	1.0
5.15	8.87	2.8	5.61	0.9	2.02	0.8	0.59	0.7	1.29	0.6	0.47	0.9
5.30	6.73	2.6	4.12	0.8	1.22	0.6	0.43	0.7	0.97	0.5	0.34	0.8
5.45	5.16	2.4	3.08	0.7	0.76	0.4	0.32	0.6	0.73	0.5	0.26	0.7
6. 0	4.01	2.2	2.37	0.7	0.51	0.4	0.23	0.6	0.56	0.4	0.20	0.7
6.15	3.17	2.1	1.86	0.7	0.38	0.3	0.17	0.5	0.44	0.4	0.17	0.7
6.30	2.54	2.0	1.50	0.7	0.30	0.3	0.13	0.5	0.35	0.4	0.15	0.7
6.45	2.07	1.9	1.24	0.6	0.24	0.3	0.11	0.5	0.31	0.4	0.13	0.6
7. 0	1.72	1.8	1.03	0.6	0.20	0.3	0.09	0.4	0.27	0.4	0.11	0.6
7.15	1.44	1.7	0.87	0.6	0.17	0.3	0.08	0.4	0.23	0.4	0.09	0.6
7.30	1.21	1.6	0.74	0.6	0.14	0.3	0.07	0.4	0.20	0.4	0.08	0.6
7.45	1.03	1.6	0.61	0.6	0.12	0.3	0.06	0.4	0.18	0.4	0.07	0.5
8. 0	0.88	1.5	0.49	0.5	0.11	0.3	0.06	0.4	0.16	0.4	0.07	0.5

ENVIRONMENTAL PROTECTION AGENCY
WASHINGTON, D.C.

EXTRAN USER'S MANUAL EXAMPLE PROBLEM 1
BASIC PIPE SYSTEM FROM FIGURE 8

**** EXTENDED TRANSPORT PROGRAM ****
**** ANALYSIS MODULE ****

WATER RESOURCES DIVISION
CAMP DRESSER & MCKEE INC.
ANNANDALE, VIRGINIA

SUMMARY STATISTICS FOR CONDUITS

CONDUIT NUMBER	DESIGN FLOW (CFS)	DESIGN VELOCITY (FPS)	CONDUIT VERTICAL DEPTH (IN)	MAXIMUM COMPUTED FLOW (CFS)	TIME OF OCCURENCE HR.	TIME OF OCCURENCE MIN.	MAXIMUM COMPUTED VELOCITY (FPS)	TIME OF OCCURENCE HR.	TIME OF OCCURENCE MIN.	RATIO OF MAX. TO DESIGN FLOW	MAXIMUM DEPTH ABOVE INVERT AT CONDUIT ENDS UPSTREAM (FT)	MAXIMUM DEPTH ABOVE INVERT AT CONDUIT ENDS DOWNSTREAM (FT)
8040	73.6	5.9	48.0	50.8	0	19	6.4	0	18	0.7	13.40	16.70
8060	53.3	4.2	48.0	47.5	0	25	5.0	0	24	0.9	16.70	19.48
8100	78.1	4.9	54.0	61.0	0	37	5.5	0	34	0.8	3.36	3.56
8130	70.6	4.4	54.0	54.9	1	4	5.1	0	57	0.8	3.56	2.51
1030	3028.3	12.5	108.0	120.6	3	1	5.5	3	2	0.0	4.22	0.53
1570	123.6	5.2	66.0	52.7	1	22	3.9	1	10	0.4	2.51	3.87
1600	146.8	5.2	72.0	73.7	0	40	6.1	0	38	0.5	3.39	3.87
1630	2313.2	9.5	108.0	120.7	1	57	5.0	0	44	0.1	3.87	4.22
1602	43.4	2.2	60.0	70.6	2	60	4.0	0	28	1.6	21.68	3.39

```
ENVIRONMENTAL PROTECTION AGENCY          ****  EXTENDED TRANSPORT PROGRAM  ****      WATER RESOURCES DIVISION
WASHINGTON, D.C.                         ****                              ****      CAMP DRESSER & MCKEE INC.
                                         ****        ANALYSIS MODULE       ****      ANNANDALE, VIRGINIA

EXTRAN USER'S MANUAL EXAMPLE PROBLEM 1
BASIC PIPE SYSTEM FROM FIGURE 8.
```

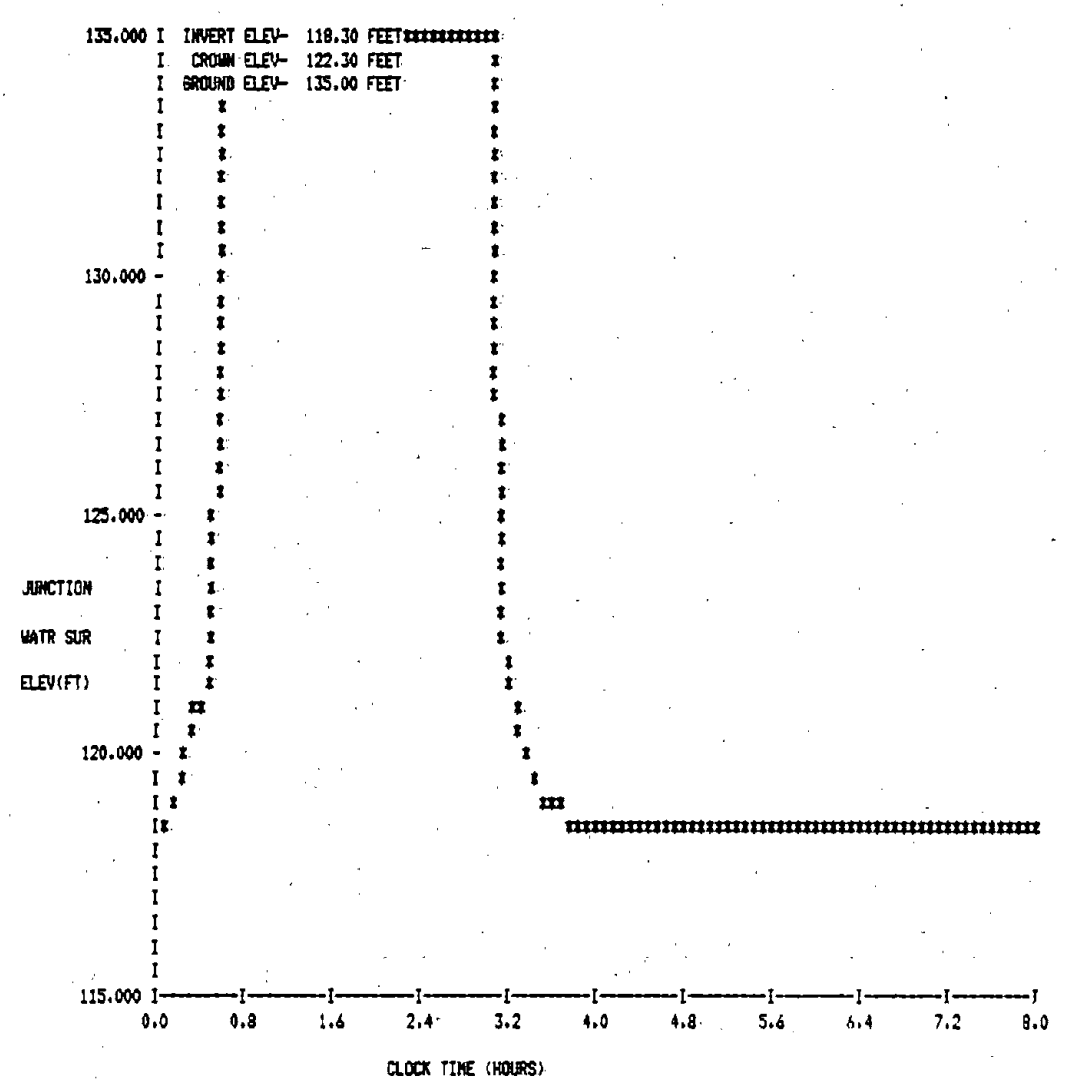

ENVIRONMENTAL PROTECTION AGENCY
WASHINGTON, D.C.

EXTENDED TRANSPORT PROGRAM
ANALYSIS MODULE

WATER RESOURCES DIVISION
CAMP DRESSER & MCKEE INC.
ANNANDALE, VIRGINIA

EXTRAN USER'S MANUAL EXAMPLE PROBLEM 1
BASIC PIPE SYSTEM FROM FIGURE 8

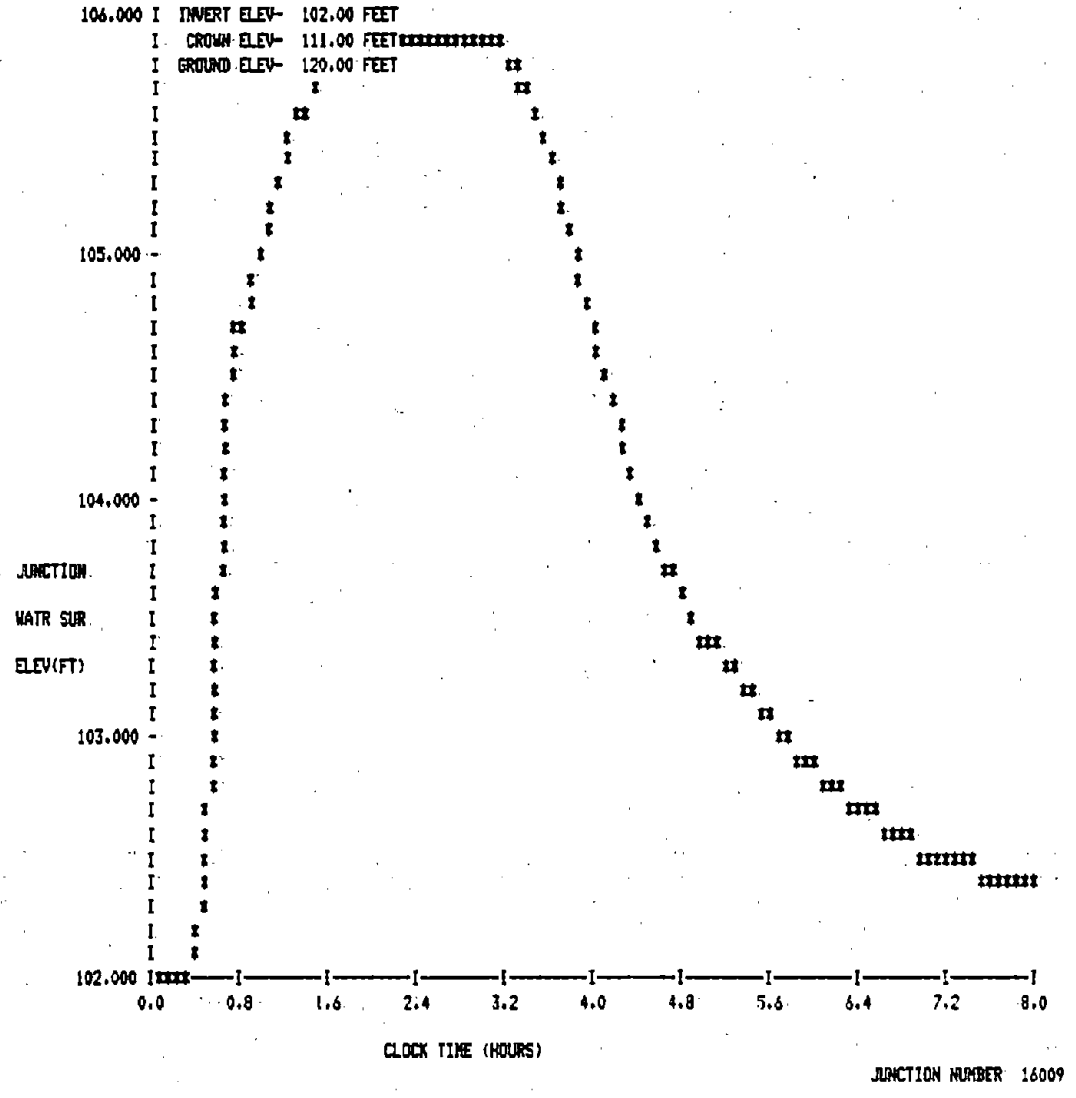

JUNCTION NUMBER 16009

ENVIRONMENTAL PROTECTION AGENCY
WASHINGTON, D.C.

EXTENDED TRANSPORT PROGRAM
ANALYSIS MODULE

WATER RESOURCES DIVISION
CAMP DRESSER & MCKEE INC.
ANNANDALE, VIRGINIA

EXTRAN USER'S MANUAL EXAMPLE PROBLEM 1
BASIC PIPE SYSTEM FROM FIGURE 8

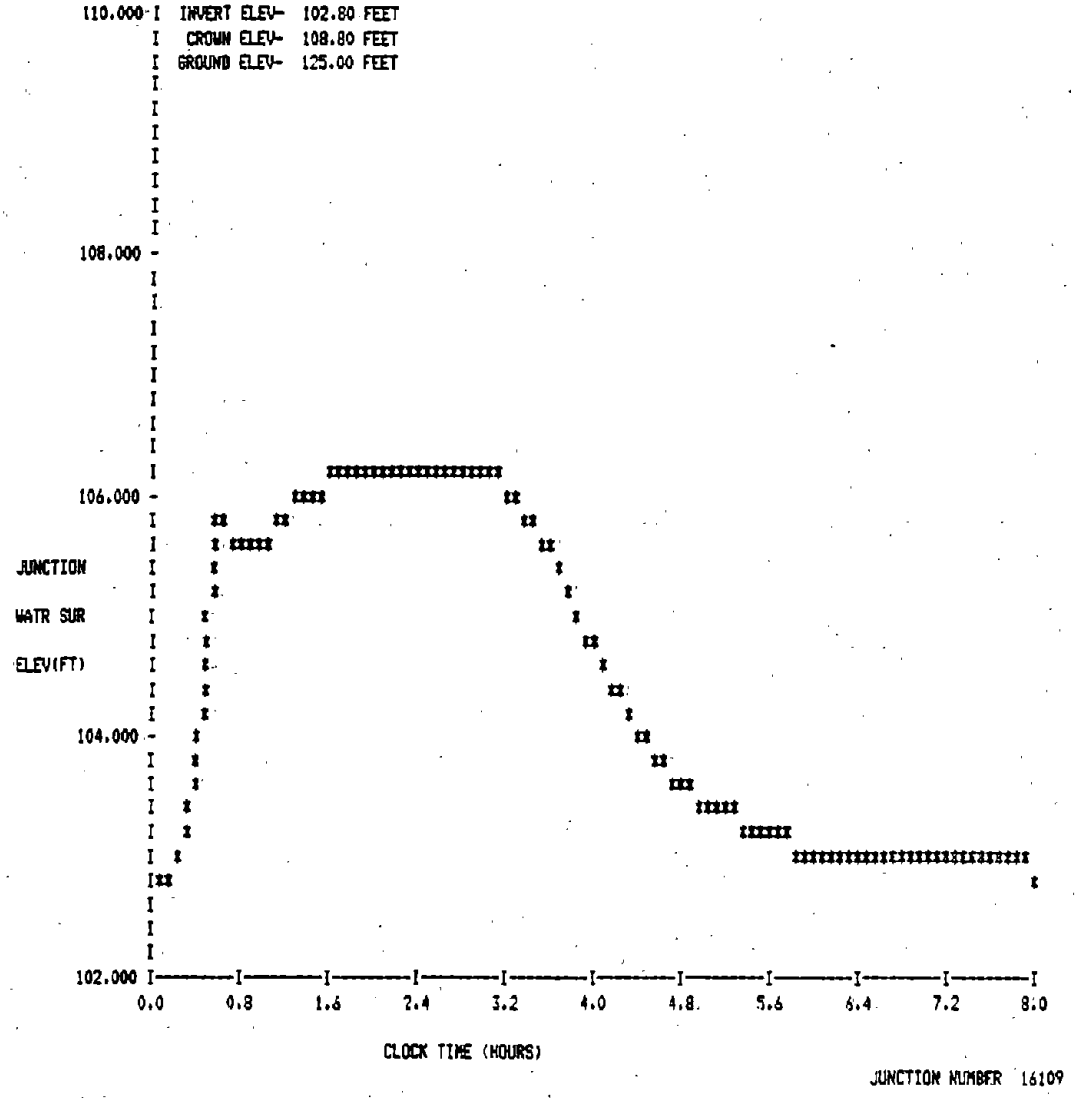

JUNCTION NUMBER 16109

ENVIRONMENTAL PROTECTION AGENCY
WASHINGTON, D.C.

EXTENDED TRANSPORT PROGRAM
ANALYSIS MODULE

WATER RESOURCES DIVISION
CAMP DRESSER & MCKEE INC.
ANNANDALE, VIRGINIA

EXTRAN USER'S MANUAL EXAMPLE PROBLEM 1
BASIC PIPE SYSTEM FROM FIGURE 8

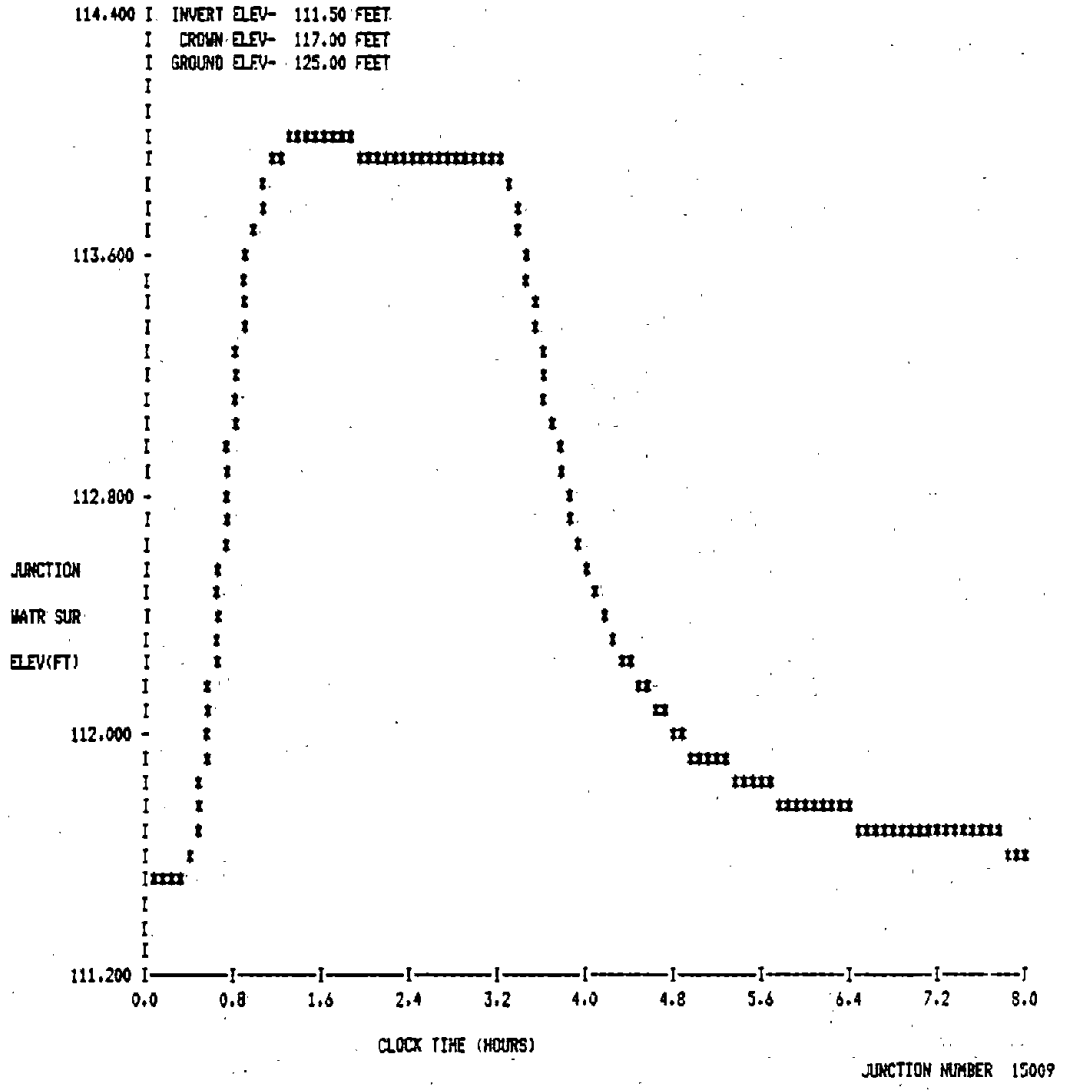

JUNCTION NUMBER 15009

ENVIRONMENTAL PROTECTION AGENCY
WASHINGTON, D.C.

EXTENDED TRANSPORT PROGRAM
ANALYSIS MODULE

WATER RESOURCES DIVISION
CAMP DRESSER & MCKEE INC.
ANNANDALE, VIRGINIA

EXTRAN USER'S MANUAL EXAMPLE PROBLEM 1
BASIC PIPE SYSTEM FROM FIGURE 8

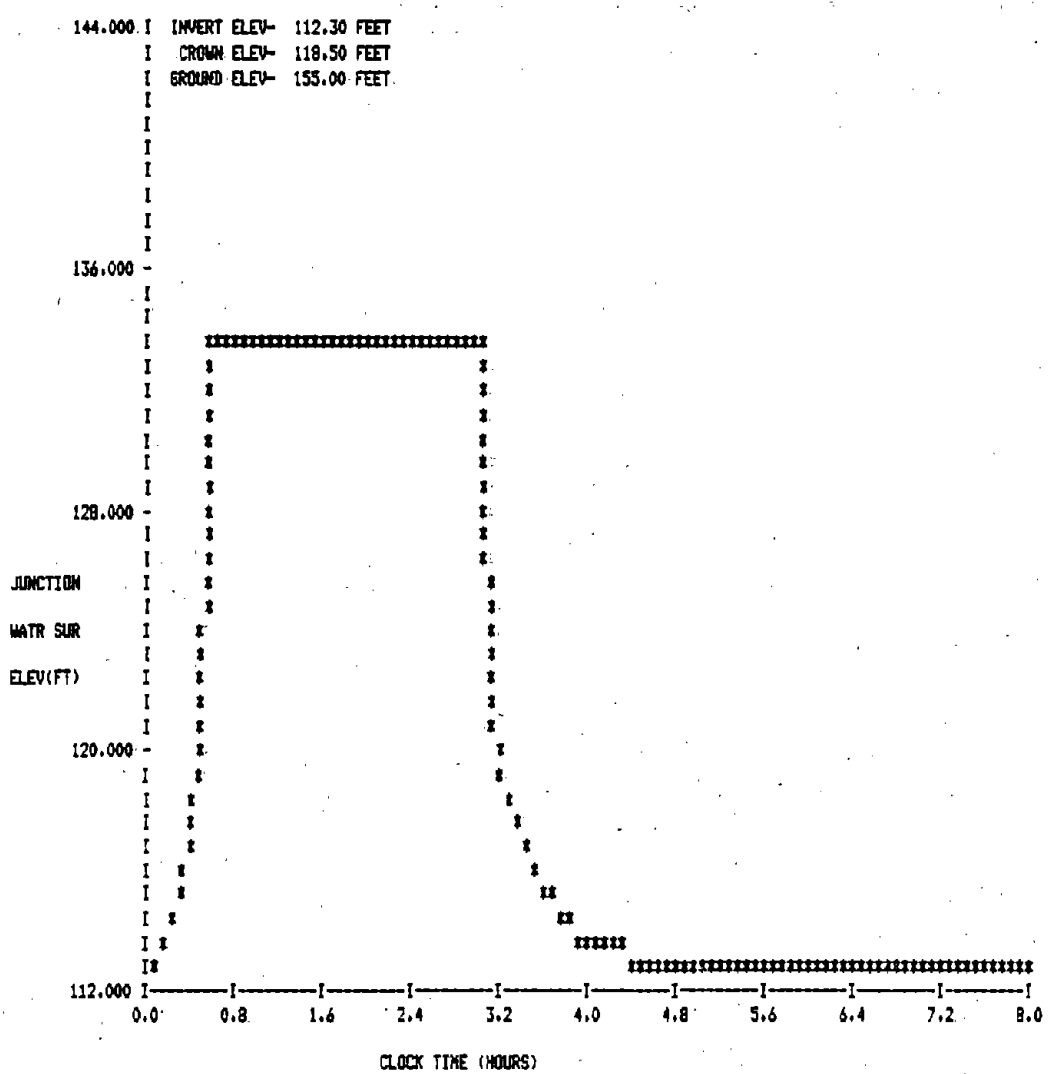

JUNCTION NUMBER 82309

```
ENVIRONMENTAL PROTECTION AGENCY          ****  EXTENDED TRANSPORT PROGRAM  ****      WATER RESOURCES DIVISION
WASHINGTON, D.C.                         ****                              ****      CAMP DRESSER & MCKEE INC.
                                         ****        ANALYSIS MODULE       ****      ANNANDALE, VIRGINIA
EXTRAN USER'S MANUAL EXAMPLE PROBLEM 1
BASIC PIPE SYSTEM FROM FIGURE 8
```

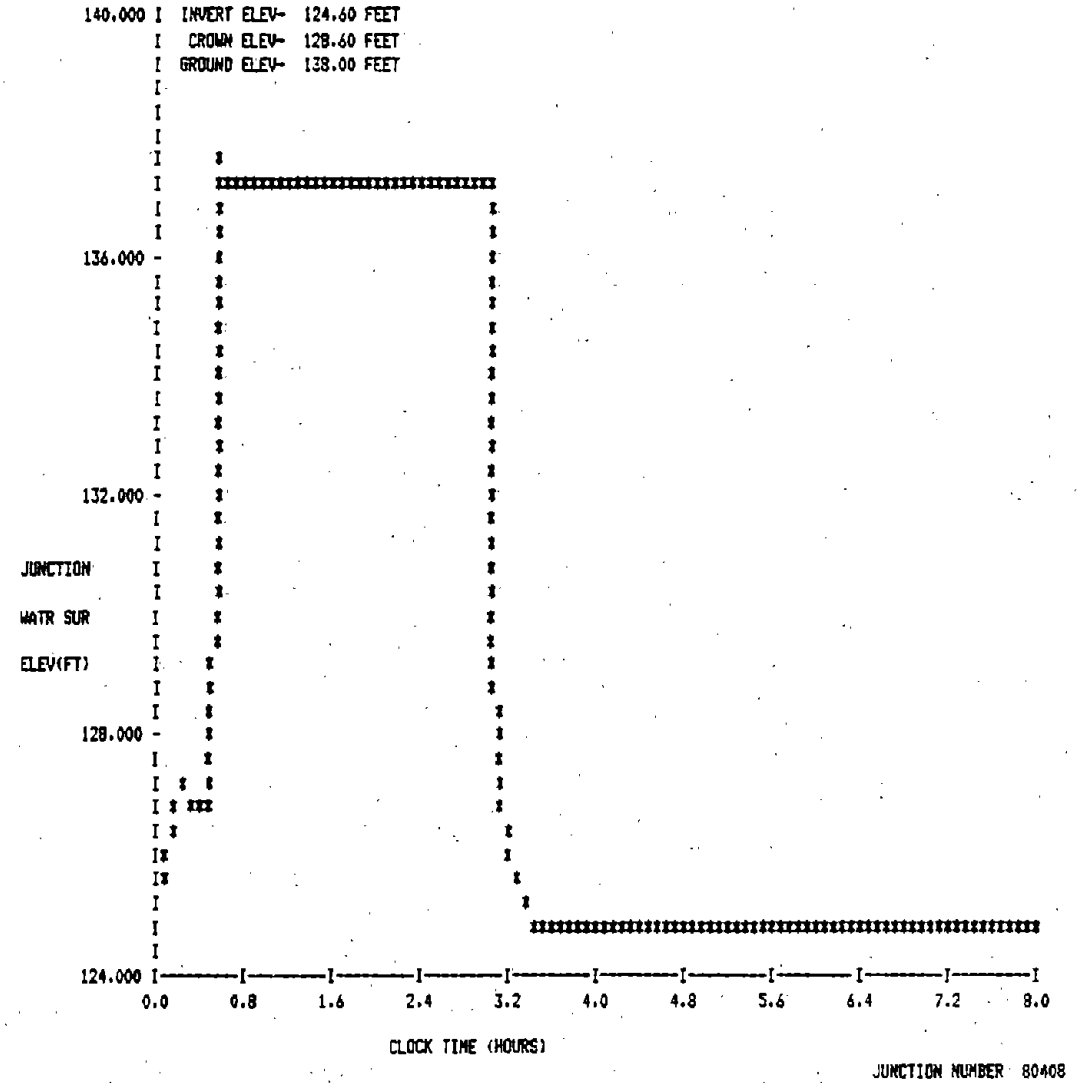

JUNCTION NUMBER 80408

ENVIRONMENTAL PROTECTION AGENCY
WASHINGTON, D.C.

EXTENDED TRANSPORT PROGRAM

ANALYSIS MODULE

WATER RESOURCES DIVISION
CAMP DRESSER & MCKEE INC.
ANNANDALE, VIRGINIA

EXTRAN USER'S MANUAL EXAMPLE PROBLEM 1
BASIC PIPE SYSTEM FROM FIGURE 8

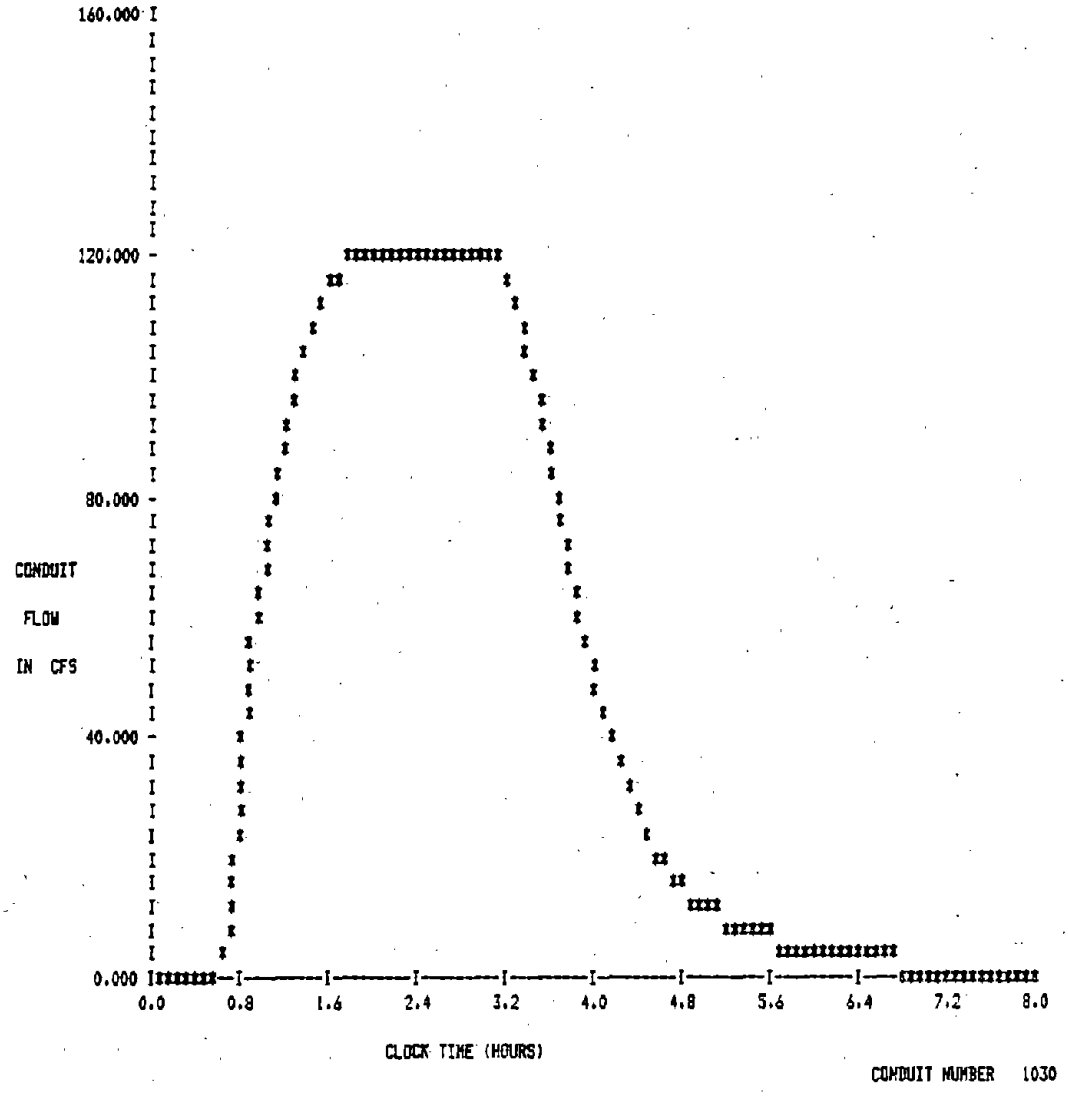

CONDUIT NUMBER 1030

ENVIRONMENTAL PROTECTION AGENCY
WASHINGTON, D.C.

EXTENDED TRANSPORT PROGRAM
ANALYSIS MODULE

WATER RESOURCES DIVISION
CAMP DRESSER & MCKEE INC.
ANNANDALE, VIRGINIA

EXTRAN USER'S MANUAL EXAMPLE PROBLEM 1
BASIC PIPE SYSTEM FROM FIGURE 8

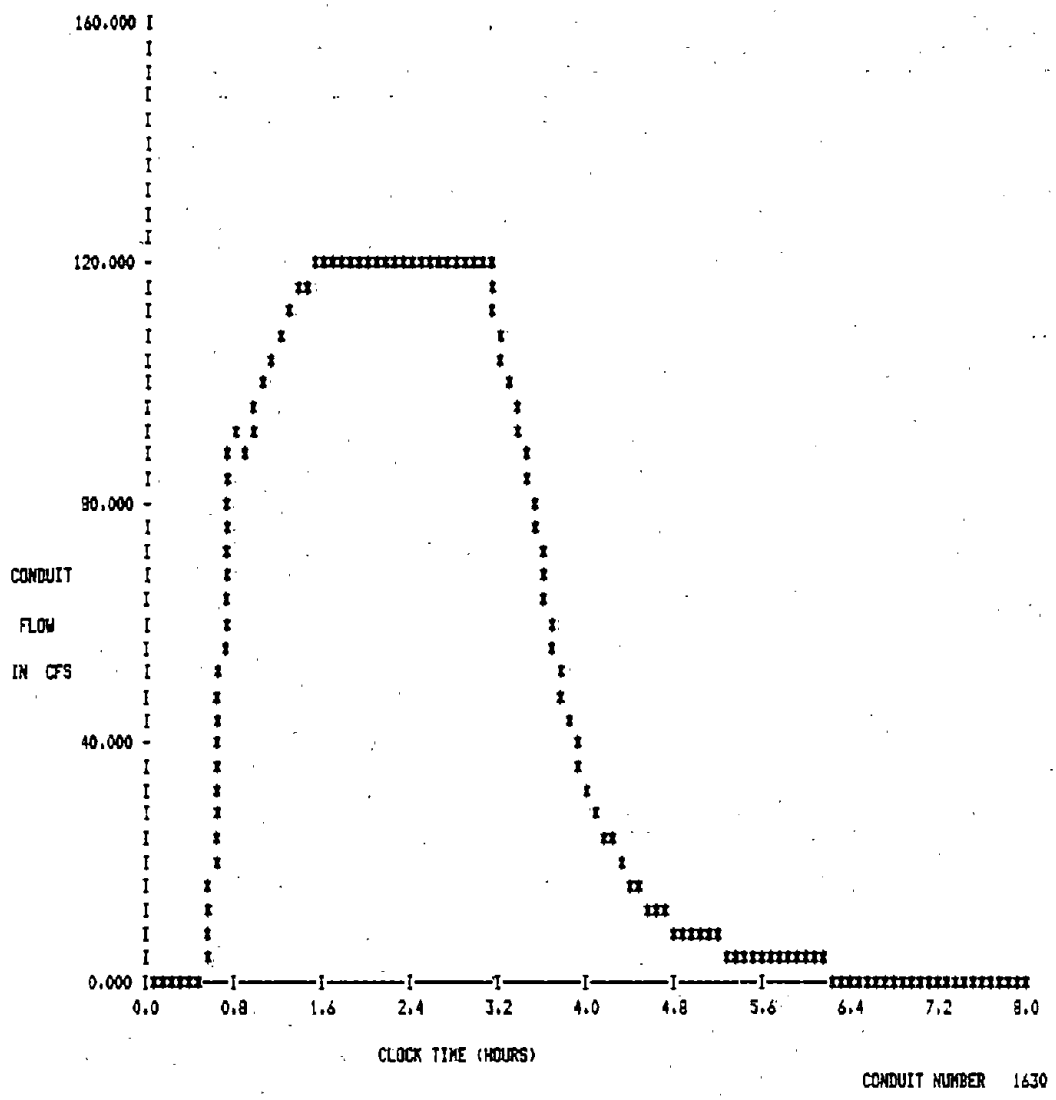

CONDUIT NUMBER 1630

ENVIRONMENTAL PROTECTION AGENCY
WASHINGTON, D.C.

EXTENDED TRANSPORT PROGRAM

ANALYSIS MODULE

WATER RESOURCES DIVISION
CAMP DRESSER & MCKEE INC.
ANNANDALE, VIRGINIA

EXTRAN USER'S MANUAL EXAMPLE PROBLEM 1
BASIC PIPE SYSTEM FROM FIGURE 8

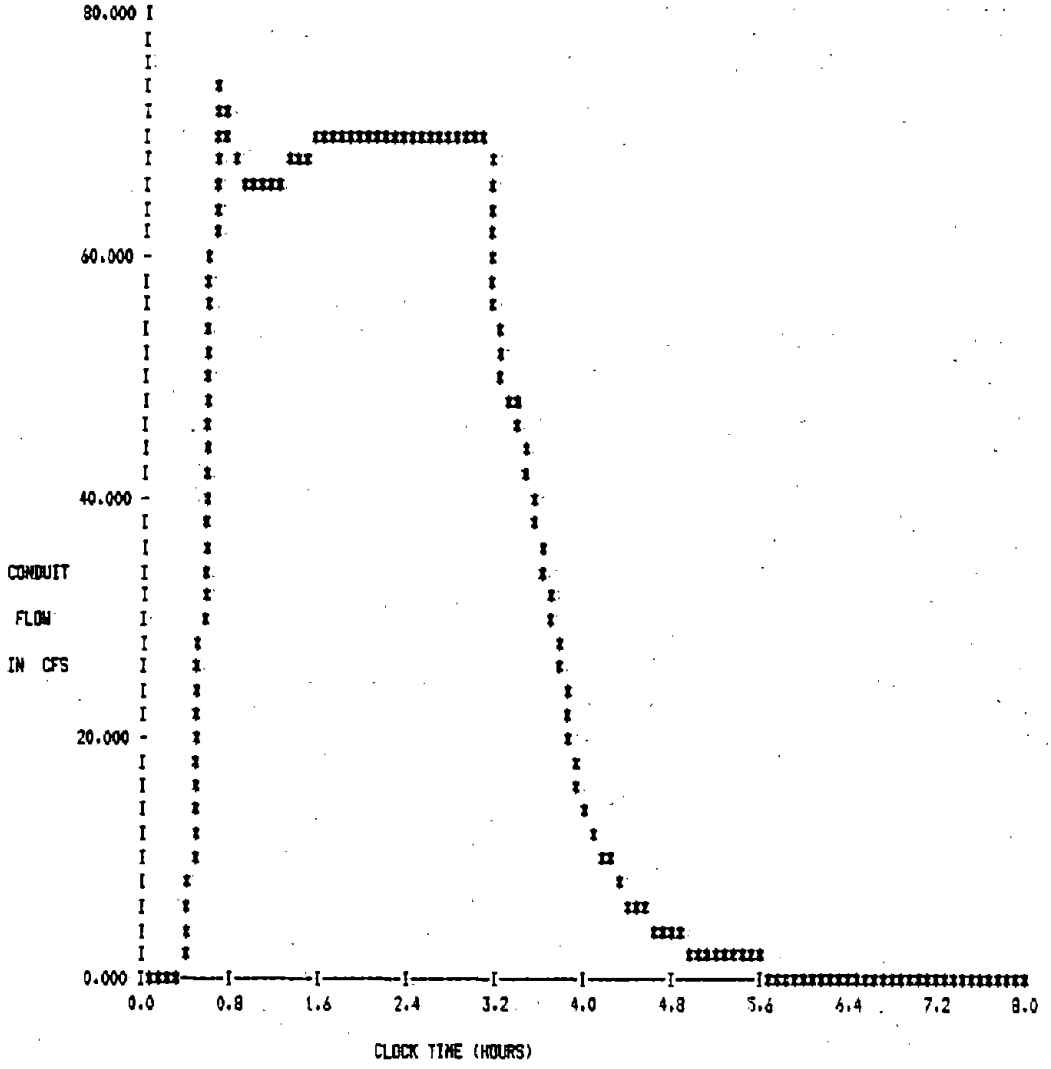

CONDUIT NUMBER 1600

ENVIRONMENTAL PROTECTION AGENCY
WASHINGTON, D.C.

EXTRAN USER'S MANUAL EXAMPLE PROBLEM 1
BASIC PIPE SYSTEM FROM FIGURE 8

EXTENDED TRANSPORT PROGRAM
ANALYSIS MODULE

WATER RESOURCES DIVISION
CAMP DRESSER & MCKEE INC.
ANNANDALE, VIRGINIA

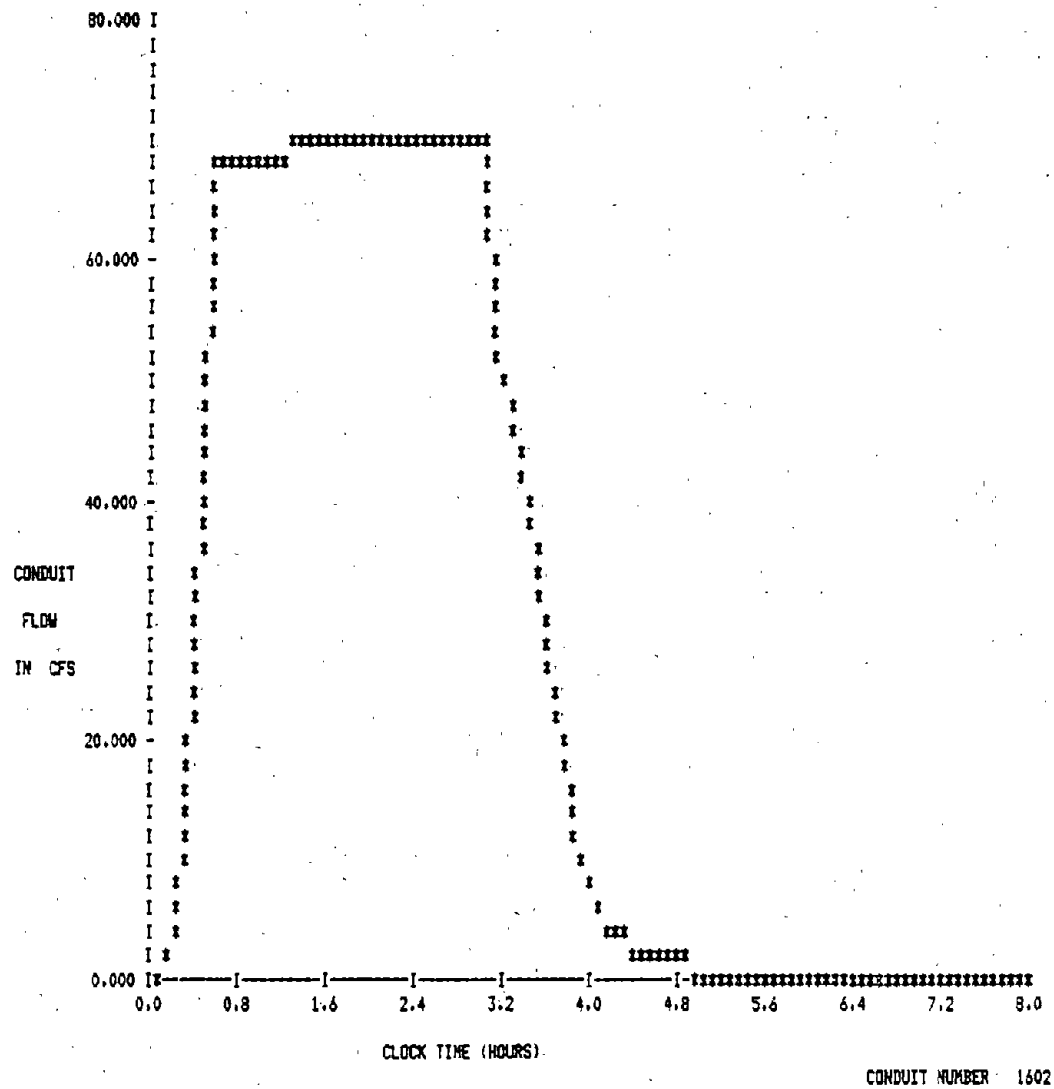

CONDUIT NUMBER 1602

ENVIRONMENTAL PROTECTION AGENCY
WASHINGTON, D.C.

EXTRAN USER'S MANUAL EXAMPLE PROBLEM 1
BASIC PIPE SYSTEM FROM FIGURE 8

EXTENDED TRANSPORT PROGRAM
ANALYSIS MODULE

WATER RESOURCES DIVISION
CAMP DRESSER & MCKEE INC.
ANNANDALE, VIRGINIA

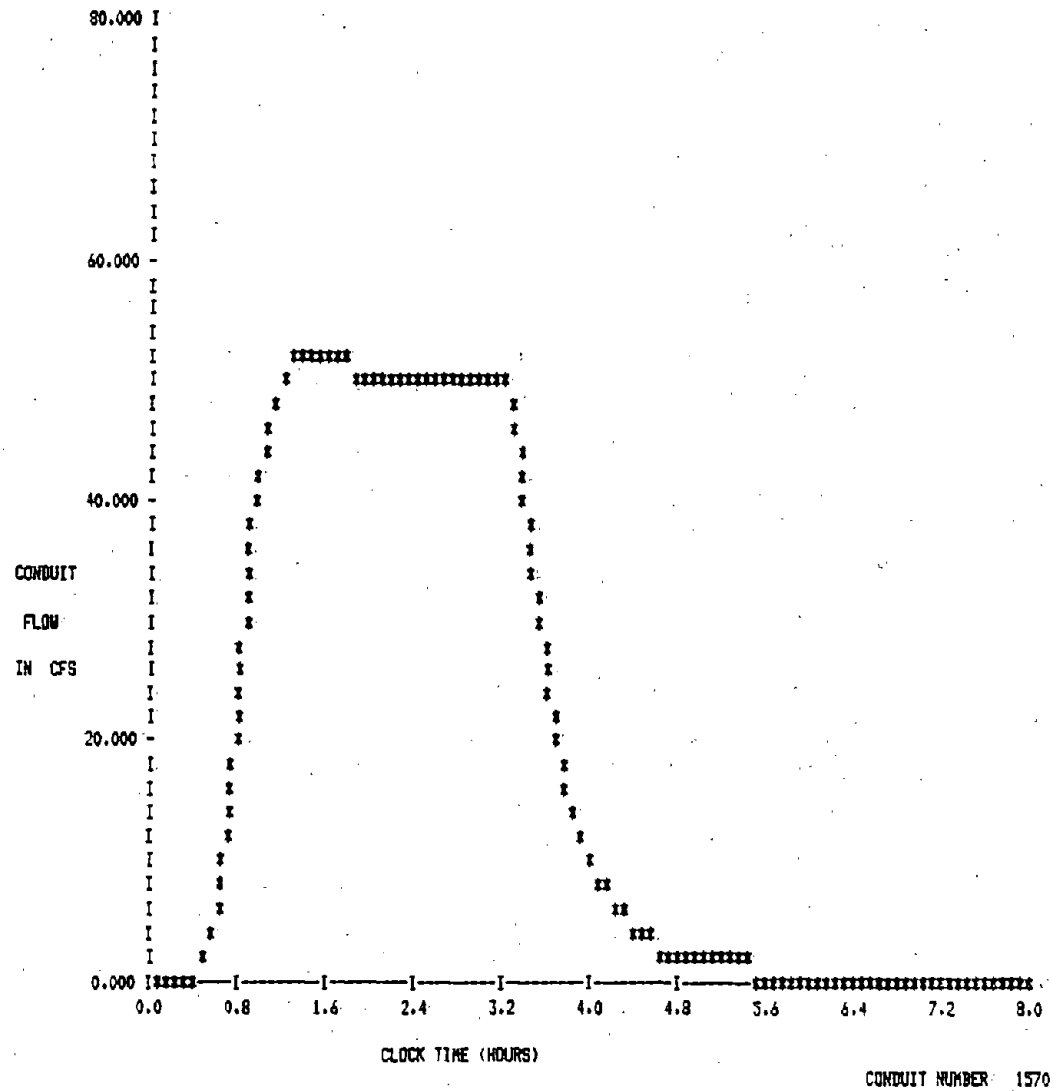

CONDUIT NUMBER 1570

ENVIRONMENTAL PROTECTION AGENCY
WASHINGTON, D.C.

EXTENDED TRANSPORT PROGRAM
ANALYSIS MODULE

WATER RESOURCES DIVISION
CAMP DRESSER & MCKEE INC.
ANNANDALE, VIRGINIA

EXTRAN USER'S MANUAL EXAMPLE PROBLEM 1
BASIC PIPE SYSTEM FROM FIGURE 8

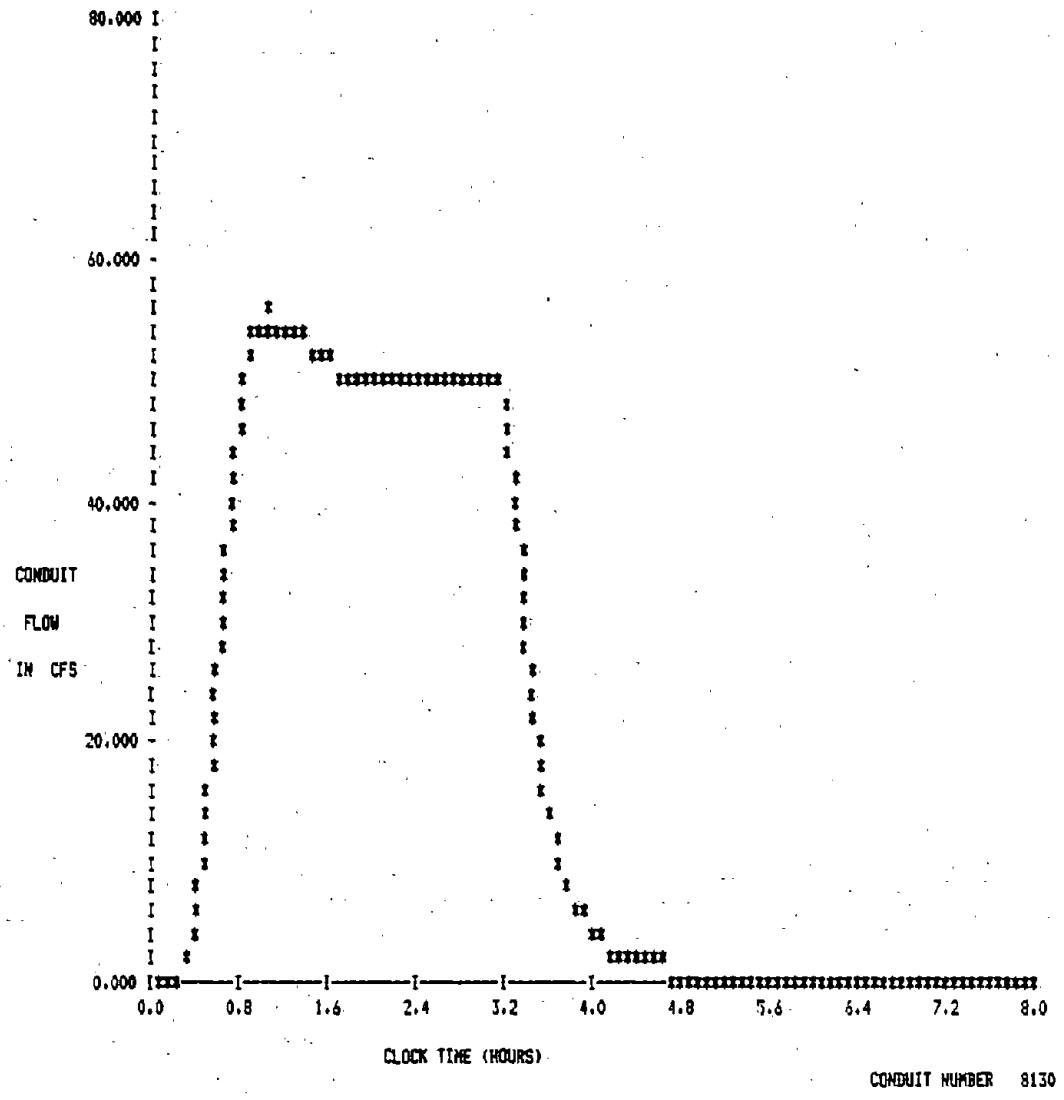

CONDUIT NUMBER 8130

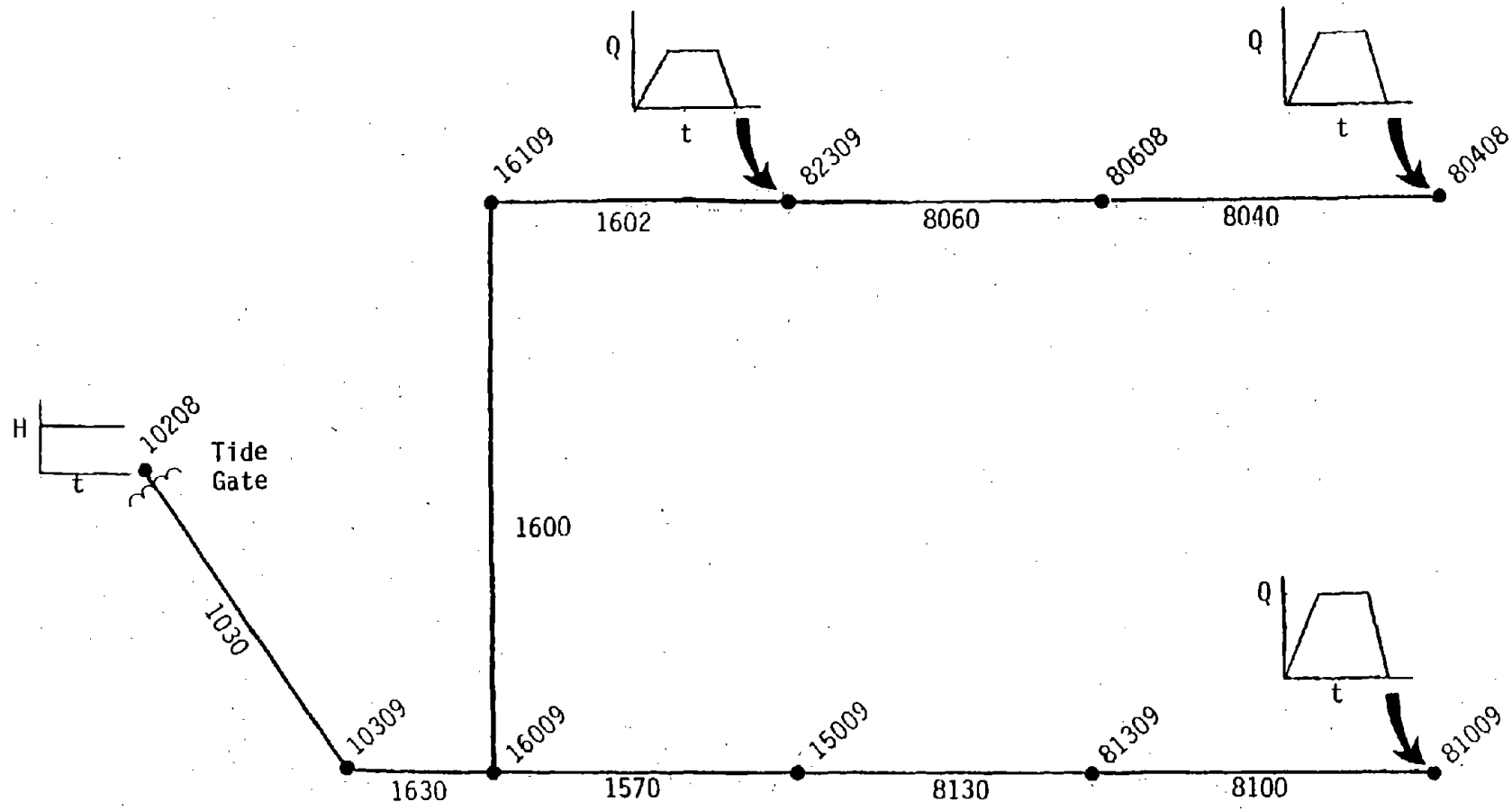

Figure 9. Basic system with tide gate.

TABLE 4

INPUT DATA SET FOR EXAMPLE 2

```
    0    0
EXTRAN USER'S MANUAL EXAMPLE PROBLEM 2
BASIC PIPE SYSTEM WITH TIDE GATE FROM FIGURE 9
 1440  20.    .0    6    6    6    6   45   45    3   30 0.05
     80608     16009     16109     15009     82309     80408
      1030      1630      1600      1602      1570      8130
     80608     16009     16109     15009     82309     80408
      1030      1630      1600      1602      1570      8130
 80408040880608    1      4.00     1800.          .015
 80608060882309    1      4.00     2075.     2.2  .015
 81008100981309    1      4.50     5100.          .015
 81308130915009    1      4.50     3500.          .015
 10301030910208    6      9.0      4500.          .016  3.    3.
 15701500916009    1      5.5      5000.         .0154
 16001600916109    1      6.0       500.          .015
 16301600910309    6      9.0       300.          .015  3.    3.
 16028230916109    1        5.     5000.          .034
99999
80408138.0124.6 0.0
80608135.0118.3  0.0
81009137.0128.2  0.0
81309130.0117.5  0.0
82309155.0112.3  0.0
10208100.0 89.9  0.0
10309111.0101.6  0.0
15009123.0111.5  0.0
16009120.0102.0  0.0
16109125.0102.8  0.0
99999
99999
99999
99999
99999
99999
10208
99999
    2 94.4
99999
823098040881009
0.0          0.0        0.0        0.0
0.25         40.0       45.0       50.0
3.0          40.0       45.0       50.0
3.25         0.0        0.0        0.0
12.0         0.0        0.0        0.0
```

TABLE 5

OUTPUT FROM EXAMPLE 2

```
ENVIRONMENTAL PROTECTION AGENCY        ****  EXTENDED TRANSPORT PROGRAM  ****   WATER RESOURCES DIVISION
WASHINGTON, D.C.                       ****                              ****   CAMP DRESSER & MCKEE INC.
                                       ****        ANALYSIS MODULE       ****   ANNANDALE, VIRGINIA

EXTRAN USER'S MANUAL EXAMPLE PROBLEM 2
BASIC PIPE SYSTEM WITH TIDE GATE FROM FIGURE 9
```

SUMMARY STATISTICS FOR JUNCTIONS

JUNCTION NUMBER	GROUND ELEVATION (FT)	UPPERMOST PIPE CROWN ELEVATION (FT)	MAXIMUM COMPUTED DEPTH (FT)	TIME OF OCCURENCE HR.	TIME OF OCCURENCE MIN.	FEET OF SURCHARGE AT MAX. DEPTH	FEET MAX. DEPTH IS BELOW GROUND ELEVATION	LENGTH OF SURCHARGE (MIN)
80408	138.00	128.60	13.40	0	32	9.40	0.00	153.3
80608	135.00	122.30	16.70	0	30	12.70	0.00	159.7
81009	137.00	132.70	3.36	0	27	0.00	5.44	0.0
81309	130.00	122.00	3.56	0	51	0.00	8.94	0.0
82309	155.00	118.50	21.68	0	33	15.48	21.02	166.3
10208	100.00	98.90	4.50	0	10	0.00	5.60	0.0
10309	111.00	110.60	2.68	1	35	0.00	6.72	0.0
15009	125.00	117.00	2.51	1	22	0.00	10.99	0.0
16009	120.00	111.00	3.09	0	48	0.00	14.91	0.0
16109	125.00	108.80	3.07	0	37	0.00	19.13	0.0

TABLE 5

OUTPUT FROM EXAMPLE 2
(Continued)

```
ENVIRONMENTAL PROTECTION AGENCY          ****  EXTENDED TRANSPORT PROGRAM  ****     WATER RESOURCES DIVISION
WASHINGTON, D.C.                         ****                              ****     CAMP DRESSER & MCKEE INC.
                                         ****        ANALYSIS MODULE       ****     ANNANDALE, VIRGINIA
EXTRAN USER'S MANUAL EXAMPLE PROBLEM 2
BASIC PIPE SYSTEM WITH TIDE GATE FROM FIGURE 9
```

SUMMARY STATISTICS FOR CONDUITS

CONDUIT NUMBER	DESIGN FLOW (CFS)	DESIGN VELOCITY (FPS)	CONDUIT VERTICAL DEPTH (IN)	MAXIMUM COMPUTED FLOW (CFS)	TIME OF OCCURENCE HR.	TIME OF OCCURENCE MIN.	MAXIMUM COMPUTED VELOCITY (FPS)	TIME OF OCCURENCE HR.	TIME OF OCCURENCE MIN.	RATIO OF MAX. TO DESIGN FLOW	MAXIMUM DEPTH ABOVE INVERT AT CONDUIT ENDS UPSTREAM (FT)	MAXIMUM DEPTH ABOVE INVERT AT CONDUIT ENDS DOWNSTREAM (FT)
8040	73.6	5.9	48.0	50.8	0	19	6.4	0	18	0.7	13.40	16.70
8060	53.3	4.2	48.0	47.5	0	25	5.0	0	24	0.9	16.70	19.48
8100	78.1	4.9	54.0	61.0	0	37	5.5	0	34	0.8	3.36	3.56
8130	70.6	4.4	54.0	54.9	1	4	5.1	0	57	0.8	3.56	2.51
1030	3028.3	12.5	108.0	120.4	1	35	3.0	1	35	0.0	2.68	4.50
1570	123.6	5.2	66.0	52.7	1	22	4.5	1	23	0.4	2.51	3.09
1600	146.8	5.2	72.0	74.6	0	40	6.1	0	38	0.5	3.07	3.09
1630	2313.2	9.5	108.0	120.8	1	25	5.5	0	51	0.1	3.09	2.68
1602	43.4	2.2	60.0	69.0	0	37	4.0	0	28	1.6	21.68	3.07

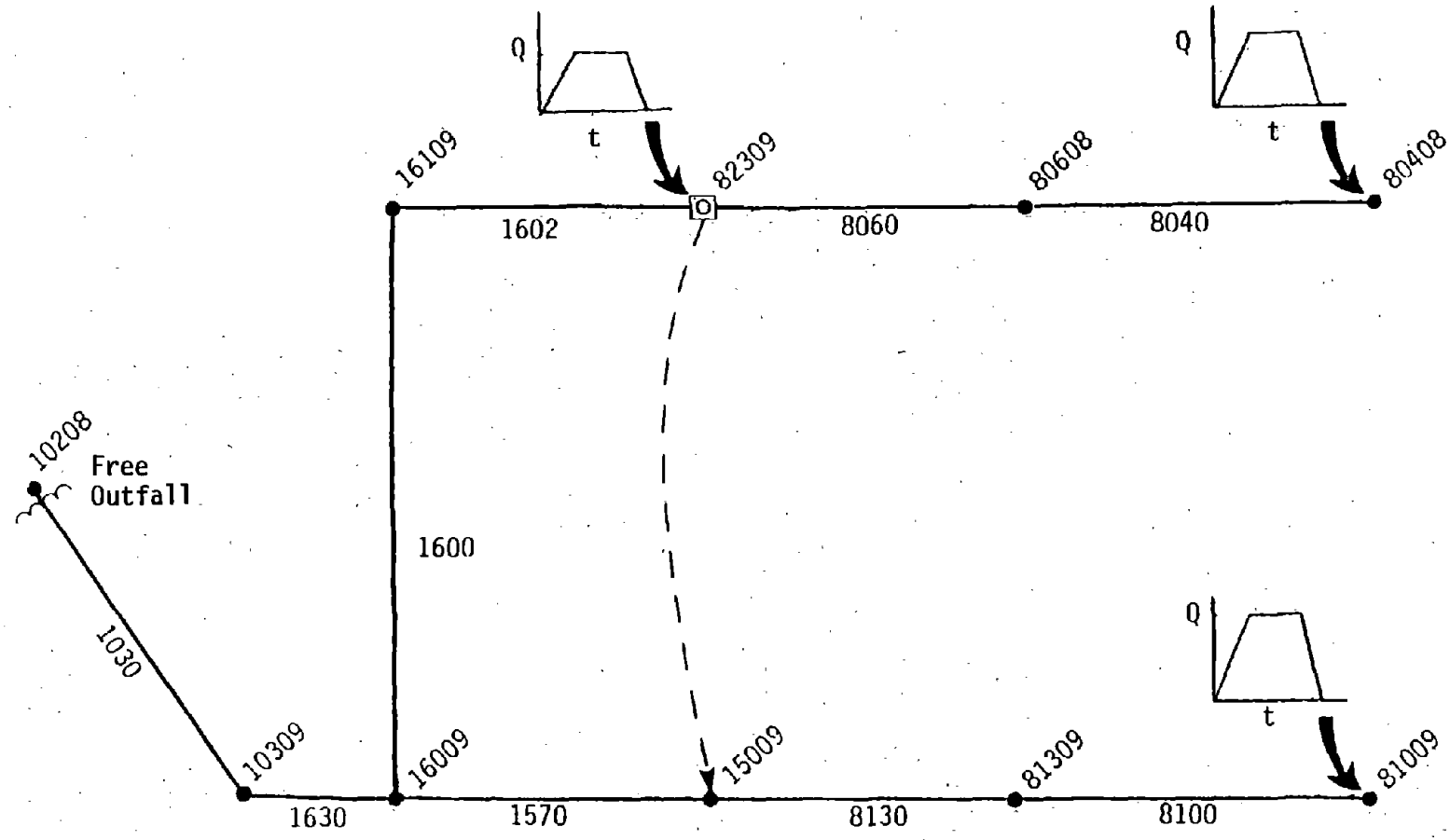

Figure 10. Sump orifice at Junction 82309..

TABLE 6

INPUT DATA SET FOR EXAMPLE 3

```
    0     0
EXTRAN USER'S MANUAL EXAMPLE PROBLEM 3
BASIC PIPE SYSTEM WITH SUMP ORIFICE AT JUNCTION 82309 FROM FIG. 10
 1440  20.    .0    6     6     6     6    45    45     3    30 0.05
     80608      16009      16109      15009      82309      80408
      1030       1630       1600       1602       1570       8130
     80608      16009      16109      15009      82309      80408
      1030       1630       1600       1602       1570       8130
 80408040880608     1       4.00      1800.            .015
 80608060882309     1       4.00      2075.      2.2   .015
 81008100981309     1       4.50      5100.            .015
 81308130915009     1       4.50      3500.            .015
 10301030910208     6       9.0       4500.            .016   3.    3.
 15701500916009     1       5.5       5000.           .0134
 16001600916109     1       6.0        500.            .015
 16301600910309     6       9.0        300.            .015   3.    3.
 16028230916109     1         5.      5000.            .034
99999
80408138.0124.6 0.0
80608135.0118.3  0.0
81009137.0128.2  0.0
81309130.0117.5  0.0
82309155.0112.3  0.0
10208100.0 89.9  0.0
10309111.0101.6  0.0
15009125.0111.5  0.0
16009120.0102.0  0.0
16109125.0102.8  0.0
99999
99999
8230915009     2 3.14   .85
99999
99999
99999
10208
99999
99999
    1
99999
823098040881009
0.0          0.0          0.0          0.0
0.25         40.0         45.0         50.0
3.0          40.0         45.0         50.0
3.25         0.0          0.0          0.0
12.0         0.0          0.0          0.0
```

TABLE 7

OUTPUT FROM EXAMPLE 3

ENVIRONMENTAL PROTECTION AGENCY ‡‡‡‡ EXTENDED TRANSPORT PROGRAM ‡‡‡‡ WATER RESOURCES DIVISION
WASHINGTON, D.C. ‡‡‡‡ ‡‡‡‡ CAMP DRESSER & MCKEE INC.
‡‡‡‡ ANALYSIS MODULE ‡‡‡‡ ANNANDALE, VIRGINIA

EXTRAN USER'S MANUAL EXAMPLE PROBLEM 3
BASIC PIPE SYSTEM WITH SUMP ORIFICE AT JUNCTION 82309 FROM FIG. 10

SUMMARY STATISTICS FOR JUNCTIONS

JUNCTION NUMBER	GROUND ELEVATION (FT)	UPPERMOST PIPE CROWN ELEVATION (FT)	MAXIMUM COMPUTED DEPTH (FT)	TIME OF OCCURENCE HR.	TIME OF OCCURENCE MIN.	FEET OF SURCHARGE AT MAX. DEPTH	FEET MAX. DEPTH IS BELOW GROUND ELEVATION	LENGTH OF SURCHARGE (MIN)
80408	138.00	128.60	2.61	0	16	0.00	10.79	0.0
80608	135.00	122.30	3.21	0	32	0.00	13.49	0.0
81009	137.00	132.70	3.48	0	29	0.00	5.32	0.0
81309	130.00	122.00	2.86	0	58	0.00	9.64	0.0
82309	155.00	118.50	6.16	0	59	0.00	36.54	0.0
10208	100.00	98.90	0.56	2	40	0.00	9.54	0.0
10309	111.00	110.60	4.40	2	41	0.00	5.00	0.0
15009	125.00	117.00	3.60	1	2	0.00	9.90	0.0
16009	120.00	111.00	4.05	2	41	0.00	13.95	0.0
16109	125.00	108.80	3.37	2	40	0.00	18.83	0.0

TABLE 7

OUTPUT FROM EXAMPLE 3
(Continued)

```
ENVIRONMENTAL PROTECTION AGENCY          ****  EXTENDED TRANSPORT PROGRAM  ****    WATER RESOURCES DIVISION
WASHINGTON, D.C.                         ****                              ****    CAMP DRESSER & MCKEE INC.
                                         ****        ANALYSIS MODULE       ****    ANNANDALE, VIRGINIA
EXTRAN USER'S MANUAL EXAMPLE PROBLEM 3
BASIC PIPE SYSTEM WITH SUMP ORIFICE AT JUNCTION 82309 FROM FIG. 10
```

S U M M A R Y S T A T I S T I C S F O R C O N D U I T S

CONDUIT NUMBER	DESIGN FLOW (CFS)	DESIGN VELOCITY (FPS)	CONDUIT VERTICAL DEPTH (IN)	MAXIMUM COMPUTED FLOW (CFS)	TIME OF OCCURENCE HR.	TIME OF OCCURENCE MIN.	MAXIMUM COMPUTED VELOCITY (FPS)	TIME OF OCCURENCE HR.	TIME OF OCCURENCE MIN.	RATIO OF MAX. TO DESIGN FLOW	MAXIMUM DEPTH ABOVE INVERT AT CONDUIT ENDS UPSTREAM (FT)	DOWNSTREAM (FT)
8040	73.6	5.9	48.0	50.8	0	19	6.4	0	18	0.7	2.61	3.21
8060	53.3	4.2	48.0	49.5	0	40	5.1	0	34	0.9	3.21	3.96
8100	78.1	4.9	54.0	57.2	0	41	5.5	0	37	0.7	3.48	2.86
8130	70.6	4.4	54.0	51.6	0	58	4.3	0	52	0.7	2.86	3.60
1030	3028.3	12.5	108.0	135.0	2	40	5.6	2	40	0.0	4.40	0.56
1570	123.6	5.2	66.0	93.3	1	7	5.7	1	3	0.8	3.60	4.05
1600	146.8	5.2	72.0	47.6	2	31	3.3	0	50	0.3	3.37	4.05
1630	2313.2	9.5	108.0	135.1	2	13	4.8	0	44	0.1	4.05	4.40
1602	43.4	2.2	60.0	47.7	1	31	2.8	0	55	1.1	6.16	3.37

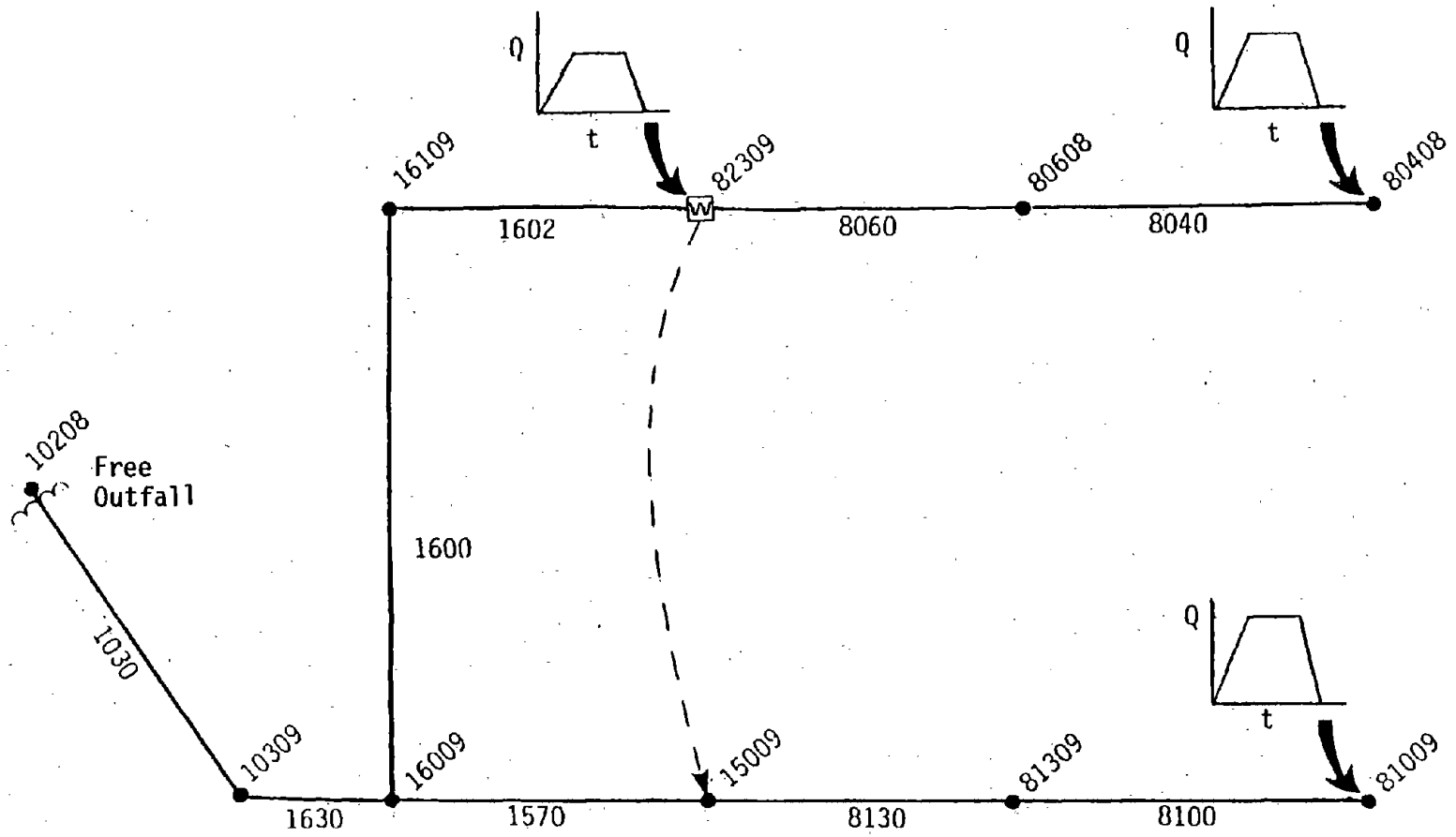

Figure 11. Weir at Junction 82309.

TABLE 8

INPUT DATA SET FOR EXAMPLE 4

```
    0     0
EXTRAN USER'S MANUAL EXAMPLE PROBLEM 4
BASIC PIPE SYSTEM WITH A WEIR AT JUNCTION 82309 FROM FIGURE 11
 1440  20.    .0     6     6     6     6    45    45     3    30 0.05
      80608     16009     16109     15009     82309     80408
       1030      1630      1600      1602      1570      8130
      80608     16009     16109     15009     82309     80408
       1030      1630      1600      1602      1570      8130
 80408040880608     1      4.00     1800.            .015
 80608060882309     1      4.00     2075.      2.2   .015
 81008100981309     1      4.50     5100.            .015
 81308130915009     1      4.50     3500.            .015
 10301030910208     6      9.0      4500.            .016   3.    3.
 15701500916009     1      5.5      5000.           .0154
 16001600916109     1      6.0       500.            .015
 16301600910309     6      9.0       300.            .015   3.    3.
 16028230916109     1        5.     5000.            .034
99999
80408138.0124.6 0.0
80608135.0118.3  0.0
81009137.0128.2  0.0
81309130.0117.5  0.0
82309155.0112.3  0.0
10208100.0 89.9  0.0
10309111.0101.6  0.0
15009125.0111.5  0.0
16009120.0102.0  0.0
16109125.0102.8  0.0
99999
99999
99999
8230915009     1  3.0  6.0  3.0  .80
99999
99999
10208
99999
99999
    1
99999
82309804088100 9
0.0          0.0          0.0          0.0
0.25         40.0         45.0         50.0
3.0          40.0         45.0         50.0
3.25         0.0          0.0          0.0
12.0         0.0          0.0          0.0
```

TABLE 9

OUTPUT FROM EXAMPLE 4

```
ENVIRONMENTAL PROTECTION AGENCY          ****  EXTENDED TRANSPORT PROGRAM  ****     WATER RESOURCES DIVISION
WASHINGTON, D.C.                         ****                              ****     CAMP DRESSER & MCKEE INC.
                                         ****        ANALYSIS MODULE       ****     ANNANDALE, VIRGINIA
EXTRAN USER'S MANUAL EXAMPLE PROBLEM 4
BASIC PIPE SYSTEM WITH A WEIR AT JUNCTION 82309 FROM FIGURE 11
```

SUMMARY STATISTICS FOR JUNCTIONS

JUNCTION NUMBER	GROUND ELEVATION (FT)	UPPERMOST PIPE CROWN ELEVATION (FT)	MAXIMUM COMPUTED DEPTH (FT)	TIME OF OCCURENCE HR.	TIME OF OCCURENCE MIN.	FEET OF SURCHARGE AT MAX. DEPTH	FEET MAX. DEPTH IS BELOW GROUND ELEVATION	LENGTH OF SURCHARGE (MIN)
80408	138.00	128.60	10.12	0	37	6.12	3.28	144.3
80608	135.00	122.30	13.32	0	38	9.32	3.38	153.3
81009	137.00	132.70	3.36	0	28	0.00	5.44	0.0
81309	130.00	122.00	3.14	0	47	0.00	9.36	0.0
82309	155.00	118.50	16.46	0	38	10.26	26.24	160.7
10208	100.00	98.90	0.56	3	1	0.00	9.54	0.0
10309	111.00	110.60	4.40	3	1	0.00	5.00	0.0
15009	125.00	117.00	3.13	1	11	0.00	10.37	0.0
16009	120.00	111.00	4.05	3	0	0.00	13.95	0.0
16109	125.00	108.80	3.46	3	0	0.00	18.74	0.0

TABLE 9

OUTPUT FROM EXAMPLE 4
(Continued)

```
ENVIRONMENTAL PROTECTION AGENCY          ****  EXTENDED TRANSPORT PROGRAM  ****      WATER RESOURCES DIVISION
WASHINGTON, D.C.                         ****                              ****      CAMP DRESSER & MCKEE INC.
                                         ****        ANALYSIS MODULE       ****      ANNANDALE, VIRGINIA
EXTRAN USER'S MANUAL EXAMPLE PROBLEM 4
BASIC PIPE SYSTEM WITH A WEIR AT JUNCTION 82309 FROM FIGURE 11
```

SUMMARY STATISTICS FOR CONDUITS

CONDUIT NUMBER	DESIGN FLOW (CFS)	DESIGN VELOCITY (FPS)	CONDUIT VERTICAL DEPTH (IN)	MAXIMUM COMPUTED FLOW (CFS)	TIME OF OCCURENCE HR.	TIME OF OCCURENCE MIN.	MAXIMUM COMPUTED VELOCITY (FPS)	TIME OF OCCURENCE HR.	TIME OF OCCURENCE MIN.	RATIO OF MAX. TO DESIGN FLOW	MAXIMUM DEPTH ABOVE INVERT AT CONDUIT ENDS UPSTREAM (FT)	MAXIMUM DEPTH ABOVE INVERT AT CONDUIT ENDS DOWNSTREAM (FT)
8040	73.6	5.9	48.0	50.8	0	19	6.4	0	18	0.7	10.12	13.32
8060	53.3	4.2	48.0	47.4	0	25	5.0	0	24	0.9	13.32	14.26
8100	78.1	4.9	54.0	59.5	0	38	5.5	0	34	0.8	3.36	3.14
8130	70.6	4.4	54.0	55.7	0	56	5.0	0	48	0.8	3.14	3.13
1030	3028.3	12.5	108.0	135.0	3	1	5.6	3	1	0.0	4.40	0.56
1570	123.6	5.2	66.0	76.3	1	11	5.2	0	55	0.6	3.13	4.05
1600	146.8	5.2	72.0	62.3	0	41	5.6	0	38	0.4	3.46	4.05
1630	2313.2	9.5	108.0	135.0	3	0	5.2	0	45	0.1	4.05	4.40
1602	43.4	2.2	60.0	61.2	3	0	3.6	0	29	1.4	16.46	3.46

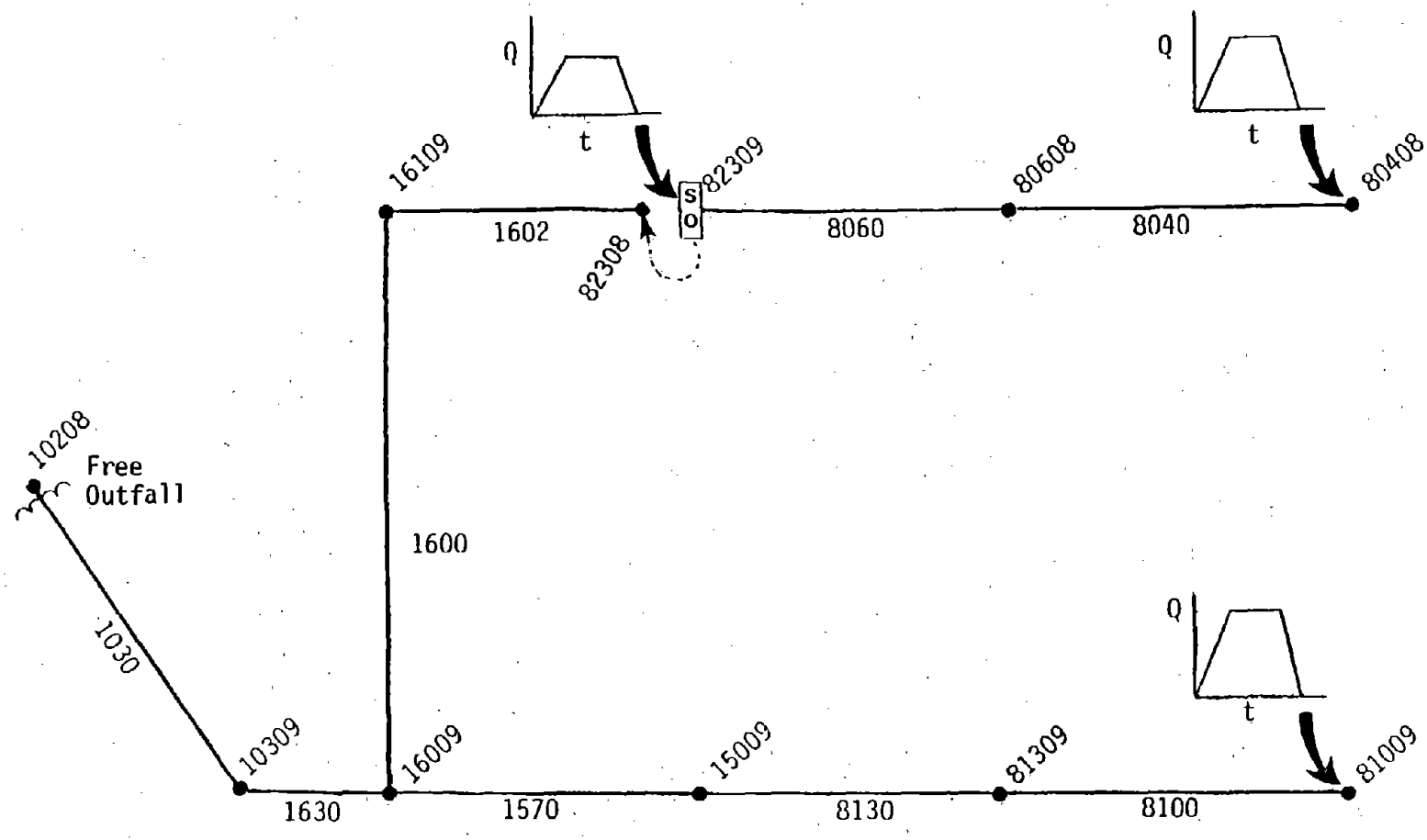

Figure 12. Storage facility and side outlet orifice at Junction 82309.

TABLE 10

INPUT DATA SET FOR EXAMPLE 5

```
    0     0
EXTRAN USER'S MANUAL EXAMPLE PROBLEM 5
STORAGE FACILITY AND SIDE OUTLET ORIFICE AT JUNC. 82309 (FIG. 12)
 1440  20.    .0    6     6     6     6    45    45     3    30 0.05
     80608      16009      16109      15009      82309      80408
      1030       1630       1600       1602       1570       8130
     80608      16009      16109      15009      82309      80408
      1030       1630       1600       1602       1570       8130
 80408040880608     1       4.00      1800.            .015
 80608060882309     1       4.00      2075.            .015
 81008100981309     1       4.50      5100.            .015
 81308130915009     1       4.50      3500.            .015
 10301030910208     6       9.0       4500.            .016   3.    3.
 15701500916009     1       5.5       5000.           .0154
 16001600916109     1       6.0        500.            .015
 16301600910309     6       9.0        300.            .015   3.    3.
 16028230816109     1         5.      5000.            .034
99999
80408138.0124.6 0.0
80608135.0118.3  0.0
81009137.0128.2  0.0
81309130.0117.5  0.0
82309155.0114.5  0.0
82308155.0112.3  0.0
10208100.0 89.9  0.0
10309111.0101.6  0.0
15009125.0111.5  0.0
16009120.0102.0  0.0
16109125.0102.8  0.0
99999
82309     155.0     800.0
99999
8230982308     1 3.14   .85   0.0
99999
99999
99999
10208
99999
99999
    1
99999
823098040881009
0.0          0.0          0.0          0.0
0.25         40.0         45.0         50.0
3.0          40.0         45.0         50.0
3.25         0.0          0.0          0.0
12.0         0.0          0.0          0.0
```

TABLE 11

OUTPUT FROM EXAMPLE 5

```
ENVIRONMENTAL PROTECTION AGENCY          ****  EXTENDED TRANSPORT PROGRAM  ****     WATER RESOURCES DIVISION
WASHINGTON, D.C.                         ****                              ****     CAMP DRESSER & MCKEE INC.
                                         ****        ANALYSIS MODULE       ****     ANNANDALE, VIRGINIA
EXTRAN USER'S MANUAL EXAMPLE PROBLEM 5
STORAGE FACILITY AND SIDE OUTLET ORIFICE AT JUNC. 82309 (FIG. 12)
```

SUMMARY STATISTICS FOR JUNCTIONS

JUNCTION NUMBER	GROUND ELEVATION (FT)	UPPERMOST PIPE CROWN ELEVATION (FT)	MAXIMUM COMPUTED DEPTH (FT)	TIME OF OCCURENCE HR.	TIME OF OCCURENCE MIN.	FEET OF SURCHARGE AT MAX. DEPTH	FEET MAX. DEPTH IS BELOW GROUND ELEVATION	LENGTH OF SURCHARGE (MIN)
80408	138.00	128.60	13.01	0	33	9.01	0.39	164.0
80608	135.00	122.30	16.70	0	33	12.70	0.00	172.3
81009	137.00	132.70	3.36	0	27	0.00	5.44	0.0
81309	130.00	122.00	3.53	0	51	0.00	8.97	0.0
82309	155.00	155.00	21.03	0	35	0.00	19.47	0.0
82308	155.00	117.30	16.01	0	35	11.01	26.69	165.0
10208	100.00	98.90	0.51	3	2	0.00	9.59	0.0
10309	111.00	110.60	4.08	3	2	0.00	5.32	0.0
15009	125.00	117.00	2.51	1	22	0.00	10.99	0.0
16009	120.00	111.00	3.73	3	1	0.00	14.27	0.0
16109	125.00	108.80	3.19	3	0	0.00	19.01	0.0

TABLE 11

OUTPUT FROM EXAMPLE 5
(Continued)

```
ENVIRONMENTAL PROTECTION AGENCY          ****  EXTENDED TRANSPORT PROGRAM  ****     WATER RESOURCES DIVISION
WASHINGTON, D.C.                         ****                              ****     CAMP DRESSER & MCKEE INC.
                                         ****        ANALYSIS MODULE       ****     ANNANDALE, VIRGINIA
EXTRAN USER'S MANUAL EXAMPLE PROBLEM 5
STORAGE FACILITY AND SIDE OUTLET ORIFICE AT JUNC. 82309 (FIG. 12)
```

' ' ' ' ' ' ' ' ' ' ' ' ' ' ' ' ' ' S U M M A R Y S T A T I S T I C S F O R C O N D U I T S ' ' ' ' ' ' ' ' ' ' ' ' ' ' ' ' ' '

CONDUIT NUMBER	DESIGN FLOW (CFS)	DESIGN VELOCITY (FPS)	CONDUIT VERTICAL DEPTH (IN)	MAXIMUM COMPUTED FLOW (CFS)	TIME OF OCCURENCE HR.	TIME OF OCCURENCE MIN.	MAXIMUM COMPUTED VELOCITY (FPS)	TIME OF OCCURENCE HR.	TIME OF OCCURENCE MIN.	RATIO OF MAX. TO DESIGN FLOW	MAXIMUM DEPTH ABOVE INVERT AT CONDUIT ENDS UPSTREAM (FT)	DOWNSTREAM (FT)
8040	73.6	5.9	48.0	52.6	0	19	6.4	0	20	0.7	13.01	16.70
8060	53.3	4.2	48.0	47.2	0	27	3.8	0	28	0.9	16.70	21.03
8100	78.1	4.9	54.0	61.0	0	37	5.5	0	34	0.8	3.36	3.53
8130	70.6	4.4	54.0	54.6	1	4	5.1	0	57	0.8	3.53	2.51
1030	3028.3	12.5	108.0	109.9	3	2	5.3	3	3	0.0	4.08	0.51
1570	123.6	5.2	66.0	52.6	1	22	4.1	1	7	0.4	2.51	3.73
1600	146.8	5.2	72.0	65.2	0	43	5.9	0	41	0.4	3.19	3.73
1630	2313.2	9.5	108.0	109.9	3	1	5.0	0	48	0.0	3.73	4.08
1602	43.4	2.2	60.0	61.0	0	31	3.9	0	32	1.4	16.01	3.19

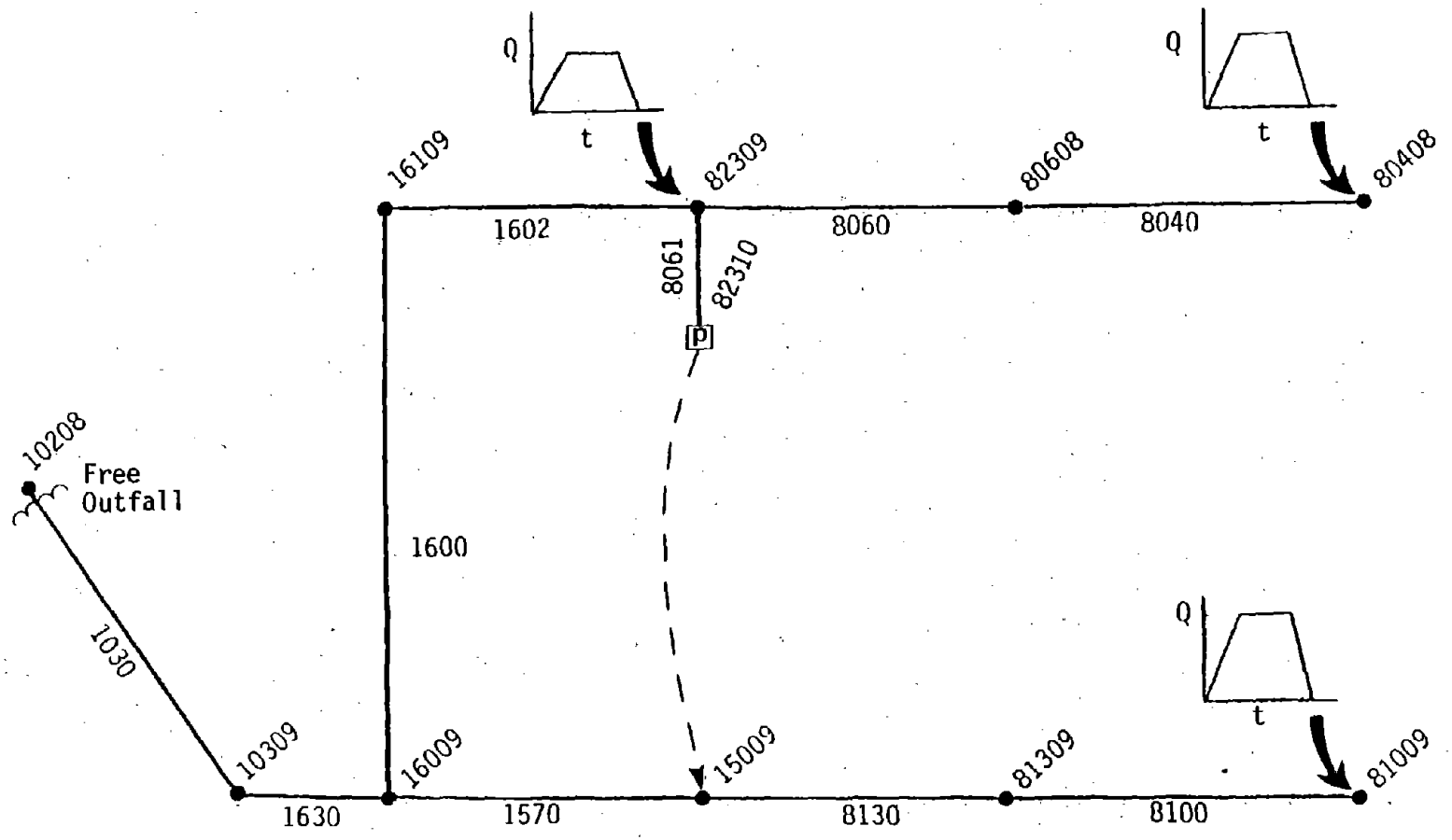

Figure 13. Off-line pump station (activitated by wet well volume) at Junction 82310.

TABLE 12

INPUT DATA SET FOR EXAMPLE 6

```
    0    0
EXTRAN USER'S MANUAL EXAMPLE PROBLEM 6
OFF LINE PUMP STATION AT JUNCTION 82310 FROM FIGURE 13
 1440  20.    .0     6     6     6     6    45    45     3    30 0.05
     80608      16009      16109      15009      82309      80408
      1030       1630       1600       1602       1570       8130
     80608      16009      16109      15009      82309      80408
      1030       1630       1600       1602       1570       8130
 80408040880608     1       4.00      1800.            .015
 80608060882309     1       4.00      2075.      2.2   .015
 81008100981309     1       4.50      5100.            .015
 80618230982310     1      4.0        300.0            .004
 81308130915009     1       4.50      3500.            .015
 10301030910208     6       9.0       4500.            .016   3.    3.
 15701500916009     1       5.5       5000.           .0154
 16001600916109     1       6.0        500.            .015
 16301600910309     6       9.0        300.            .015   3.    3.
 16028230916109     1         5.      5000.            .034
99999
80408138.0124.6 0.0
82310155.0112.3  0.0
80608135.0118.3  0.0
81009137.0128.2  0.0
81309130.0117.5  0.0
82309155.0112.3  0.0
10208100.0 89.9  0.0
10309111.0101.6  0.0
15009125.0111.5  0.0
16009120.0102.0  0.0
16109125.0102.8  0.0
99999
99999
99999
99999
8231015009     1 60.0  5.0 10.0 20.0200.0600.01200.
99999
10208
99999
99999
    1
99999
82309804088100 9
0.0          0.0        0.0        0.0
0.25         40.0       45.0       50.0
3.0          40.0       45.0       50.0
3.25         0.0        0.0        0.0
12.0         0.0        0.0        0.0
```

TABLE 13

OUTPUT FROM EXAMPLE 6

```
ENVIRONMENTAL PROTECTION AGENCY        ****  EXTENDED TRANSPORT PROGRAM  ****     WATER RESOURCES DIVISION
WASHINGTON, D.C.                       ****                              ****     CAMP DRESSER & MCKEE INC.
                                       ****        ANALYSIS MODULE       ****     ANNANDALE, VIRGINIA
EXTRAN USER'S MANUAL EXAMPLE PROBLEM 6
OFF LINE PUMP STATION AT JUNCTION 82310 FROM FIGURE 13
```

SUMMARY STATISTICS FOR JUNCTIONS

JUNCTION NUMBER	GROUND ELEVATION (FT)	UPPERMOST PIPE CROWN ELEVATION (FT)	MAXIMUM COMPUTED DEPTH (FT)	TIME OF OCCURENCE HR.	MIN.	FEET OF SURCHARGE AT MAX. DEPTH	FEET MAX. DEPTH IS BELOW GROUND ELEVATION	LENGTH OF SURCHARGE (MIN)
80408	138.00	128.60	13.19	0	44	9.19	0.21	137.7
82310	155.00	116.30	4.00	0	37	0.00	*****	0.0
80608	135.00	122.30	16.70	0	45	12.70	0.00	145.7
81009	137.00	132.70	3.46	0	29	0.00	5.34	0.0
81309	130.00	122.00	2.87	0	57	0.00	9.63	0.0
82309	155.00	118.50	20.12	0	46	13.92	22.58	151.7
10208	100.00	98.90	0.56	3	1	0.00	9.54	0.0
10309	111.00	110.60	4.40	3	1	0.00	5.00	0.0
15009	125.00	117.00	2.98	1	19	0.00	10.52	0.0
16009	120.00	111.00	4.05	3	1	0.00	13.95	0.0
16109	125.00	108.80	3.49	3	0	0.00	18.71	0.0

TABLE 13

OUTPUT FROM EXAMPLE 6
(Continued)

ENVIRONMENTAL PROTECTION AGENCY
WASHINGTON, D.C.

**** EXTENDED TRANSPORT PROGRAM ****
**** ANALYSIS MODULE ****

WATER RESOURCES DIVISION
CAMP DRESSER & MCKEE INC.
ANNANDALE, VIRGINIA

EXTRAN USER'S MANUAL EXAMPLE PROBLEM 6
OFF LINE PUMP STATION AT JUNCTION 82310 FROM FIGURE 13

SUMMARY STATISTICS FOR CONDUITS

CONDUIT NUMBER	DESIGN FLOW (CFS)	DESIGN VELOCITY (FPS)	CONDUIT VERTICAL DEPTH (IN)	MAXIMUM COMPUTED FLOW (CFS)	TIME OF OCCURENCE HR.	TIME OF OCCURENCE MIN.	MAXIMUM COMPUTED VELOCITY (FPS)	TIME OF OCCURENCE HR.	TIME OF OCCURENCE MIN.	RATIO OF MAX. TO DESIGN FLOW	MAXIMUM DEPTH ABOVE INVERT AT CONDUIT ENDS UPSTREAM (FT)	MAXIMUM DEPTH ABOVE INVERT AT CONDUIT ENDS DOWNSTREAM (FT)
8040	73.6	5.9	48.0	50.8	0	19	6.4	0	18	0.7	13.19	16.70
8060	53.3	4.2	48.0	50.4	0	33	5.1	0	30	0.9	16.70	17.92
8100	78.1	4.9	54.0	57.1	0	42	5.5	0	37	0.7	3.46	2.87
8061	0.0	0.0	48.0	115.8	3	9	9.5	3	9	0.0	20.12	*****
8130	70.6	4.4	54.0	52.0	0	57	4.9	0	56	0.7	2.87	2.98
1030	3028.3	12.5	108.0	135.0	3	1	5.6	3	2	0.0	4.40	0.56
1570	123.6	5.2	66.0	70.5	1	19	5.0	0	42	0.6	2.98	4.05
1600	146.8	5.2	72.0	65.0	3	0	4.8	0	51	0.4	3.49	4.05
1630	2313.2	9.5	108.0	135.0	2	59	5.2	0	46	0.1	4.05	4.40
1602	43.4	2.2	60.0	65.7	1	5	3.7	0	47	1.5	20.12	3.49

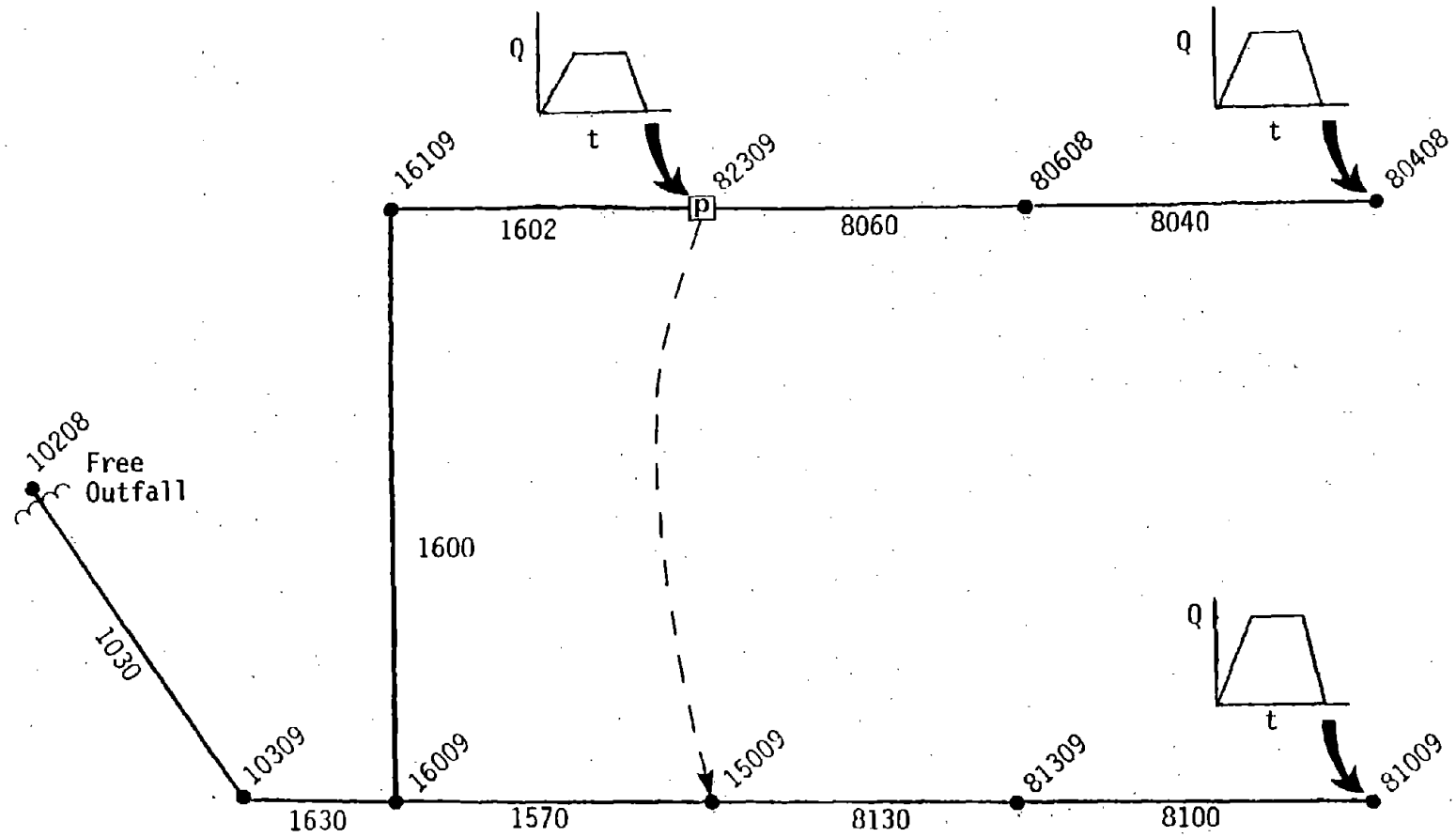

Figure 14. In-line pump (stage activated) at Junction 82309.

TABLE 14

INPUT DATA SET FOR EXAMPLE 7

```
    0     0
EXTRAN USER'S MANUAL EXAMPLE PROBLEM 7
IN LINE PUMP STATION AT JUNCTION 82309 FROM FIGURE 14
 1440  20.    .0     6     6     6     6    45    45     3    30 0.05
     80608      16009      16109      15009      82309      80408
      1030.      1630       1600       1602       1570       8130
     80608      16009      16109      15009      82309      80408
      1030       1630       1600       1602       1570       8130
 80408040880608     1       4.00      1800.            .015
 80608060882309     1       4.00      2075.       2.2  .015
 81008100981309     1       4.50      5100.            .015
 81308130915009     1       4.50      3500.            .015
 10301030910208     6       9.0       4500.            .016  3.    3.
 15701500916009     1       5.5       5000.           .0154
 16001600916109     1       6.0        500.            .015
 16301600910309     6       9.0        300.            .015  3.    3.
 16028230916109     1         5.      5000.            .034
99999
80408138.0124.6 0.0
80608135.0118.3  0.0
81009137.0128.2  0.0
81309130.0117.5  0.0
82309155.0112.3  0.0
10208100.0 89.9  0.0
10309111.0101.6  0.0
15009125.0111.5  0.0
16009120.0102.0  0.0
16109125.0102.8  0.0
99999
99999
99999
99999
8230915009     2  0.0  5.0 10.0 20.0  8.0 25.0  0.0
99999
10208
99999
99999
    1
99999
823098040881009
0.0          0.0        0.0        0.0
0.25         40.0       45.0       50.0
3.0          40.0       45.0       50.0
3.25         0.0        0.0        0.0
12.0         0.0        0.0        0.0
```

TABLE 15

OUTPUT FROM EXAMPLE 7

```
ENVIRONMENTAL PROTECTION AGENCY          ****  EXTENDED TRANSPORT PROGRAM  ****     WATER RESOURCES DIVISION
WASHINGTON, D.C.                         ****                              ****     CAMP DRESSER & MCKEE INC.
                                         ****        ANALYSIS MODULE       ****     ANNANDALE, VIRGINIA
EXTRAN USER'S MANUAL EXAMPLE PROBLEM 7
IN LINE PUMP STATION AT JUNCTION 82309 FROM FIGURE 14
```

SUMMARY STATISTICS FOR JUNCTIONS

JUNCTION NUMBER	GROUND ELEVATION (FT)	UPPERMOST PIPE CROWN ELEVATION (FT)	MAXIMUM COMPUTED DEPTH (FT)	TIME OF OCCURRENCE HR.	MIN.	FEET OF SURCHARGE AT MAX. DEPTH	FEET MAX. DEPTH IS BELOW GROUND ELEVATION	LENGTH OF SURCHARGE (MIN)
80408	138.00	128.60	13.40	0	35	9.40	0.00	148.7
80608	135.00	122.30	16.70	0	35	12.70	0.00	155.3
81009	137.00	132.70	3.43	0	28	0.00	5.37	0.0
81309	130.00	122.00	3.17	0	53	0.00	9.33	0.0
82309	155.00	118.50	20.93	0	36	14.73	21.77	162.0
10208	100.00	98.90	0.55	3	1	0.00	9.55	0.0
10309	111.00	110.60	4.34	3	1	0.00	5.06	0.0
15009	125.00	117.00	2.75	1	21	0.00	10.75	0.0
16009	120.00	111.00	3.99	3	0	0.00	14.01	0.0
16109	125.00	108.80	3.48	3	0	0.00	18.72	0.0

TABLE 15

OUTPUT FROM EXAMPLE 7
(Continued)

```
ENVIRONMENTAL PROTECTION AGENCY          ****  EXTENDED TRANSPORT PROGRAM  ****     WATER RESOURCES DIVISION
WASHINGTON, D.C.                         ****                              ****     CAMP DRESSER & MCKEE INC.
                                         ****        ANALYSIS MODULE       ****     ANNANDALE, VIRGINIA

EXTRAN USER'S MANUAL EXAMPLE PROBLEM 7
IN LINE PUMP STATION AT JUNCTION 82309 FROM FIGURE 14
```

S U M M A R Y S T A T I S T I C S F O R C O N D U I T S

CONDUIT NUMBER	DESIGN FLOW (CFS)	DESIGN VELOCITY (FPS)	CONDUIT VERTICAL DEPTH (IN)	MAXIMUM COMPUTED FLOW (CFS)	TIME OF OCCURENCE HR.	TIME OF OCCURENCE MIN.	MAXIMUM COMPUTED VELOCITY (FPS)	TIME OF OCCURENCE HR.	TIME OF OCCURENCE MIN.	RATIO OF MAX. TO DESIGN FLOW	MAXIMUM DEPTH ABOVE INVERT AT CONDUIT ENDS UPSTREAM (FT)	MAXIMUM DEPTH ABOVE INVERT AT CONDUIT ENDS DOWNSTREAM (FT)
8040	73.6	5.9	48.0	50.8	0	19	6.4	0	18	0.7	13.40	16.70
8060	53.3	4.2	48.0	48.5	0	27	5.1	0	25	0.9	16.70	18.73
8100	78.1	4.9	54.0	59.3	0	40	5.5	0	36	0.8	3.43	3.17
8130	70.6	4.4	54.0	53.4	1	3	5.0	0	54	0.8	3.17	2.75
1030	3028.3	12.5	108.0	129.8	3	1	5.6	3	1	0.0	4.34	0.55
1570	123.6	5.2	66.0	61.9	1	21	4.4	1	2	0.5	2.75	3.99
1600	146.8	5.2	72.0	69.8	3	0	5.8	0	38	0.5	3.48	3.99
1630	2313.2	9.5	108.0	129.8	3	0	5.2	0	45	0.1	3.99	4.34
1602	43.4	2.2	60.0	69.8	3	0	3.9	0	30	1.6	20.93	3.48

CHAPTER 4

TIPS FOR TROUBLE-SHOOTING

In the preceding three chapters of this user's manual, we have described in detail the individual data input elements for EXTRAN. We believe that careful study of the data input instructions, together with the example problems of the last section, will go a long way in answering the usual questions of "how to get started" in using a computerized stormwater model as intricate as this one.

Obviously, it is not possible to anticipate all problems in advance and therefore certain questions are bound to occur in the user's initial attempts at application. The purpose of this section is to offer a set of guidelines and recommendations for setting up EXTRAN which will help to reduce the number of problem areas and thereby alleviate frequently encountered start-up pains.

Most difficulties in using the EXTRAN MODEL arise from three sources: (1) improper selection of time step and incorrect specification of the total simulation period; (2) incorrect print and plot control variables; and (3) improper system connectivity in the model. These and other problems are discussed below:

- Numerical stability constraints in the EXTRAN Model require that DELT, the time-step, be no longer than the time it takes flow to travel the length of the shortest conduit in the transport system. A 10-second time-step is recommended for most wet-weather runs, while a 45-second step may be used satisfactorily for DWF conditions. The numerical stability criteria for the explicit finite-difference scheme used by the model are discussed in Chapter 2.

- Numerical instability in the EXTRAN Block is signaled by the occurrence of the following hydraulic indicators:

  (1) Oscillations in flow and water surface elevation which are undampened in time are sure signs of numerical instability. Certain combinations of pipe and weir structures may cause temporary resonance, but this is normally short lived. The unstable pipe usually is short relative to other adjacent pipes and may be subject to backwater created by a downstream weir. The correction is a shorter time-step, a longer pipe length

or combination of both. Neither of these should be applied until a careful check of system connections on all sides of the unstable pipe has been made as suggested below.

(2) A second indicator of numerical instability is a node which continued to "dry up" on each time-step despite a constant or increasing inflow from upstream sources. The cause usually is too large a time-step and excessive discharges in adjacent downstream pipe elements which pull the upstream water surface down. The problem is related to items (1) and (3) and may usually be corrected by a smaller time-step.

(3) Excessive velocities (over 20 fps) and discharges which appear to grow without limit at some point in the simulation run are manifestations of an unstable pipe element in the transport system. The cause usually can be traced to the first source above and the corrections are normally applied, as suggested in item (1) above.

(4) A large continuity error is a good indicator of either stability or other problems. A continuity check, which sums the volumes of inflow, outflow, and storage at the end of the simulation, is found at the end of the intermediary printout. If the continuity error exceeds $\pm$ 10%, the user should check the intermediate printout for pipes with zero flow or oscillating flow. These could be caused by stability or an improperly connected system.

- Systems in surcharge require a special iteration loop, allowing the explicit solution scheme to account for the rapid changes in flows and heads during surcharge conditons. This iteration loop is controlled by two variables, ITMAX, the maximum number of iterations, and SURTOL, a fraction of the flow through the surcharged area. It is recommended that ITMAX and SURTOL be set initially at 30 and 0.05, respectively. The user can check the convergence of the iteration loop by examining the number of iterations actually required and the size of the net difference in the flows through the surcharged area, shown in the intermediate printout. These are significant since the iterations end when either SURTOL times the average flow through the surcharged area is less than the flow differential discussed above, or when the number of iterations exceeds ITMAX. If ITMAX is exceeded many times, leaving relatively large flow differentials, the user should increase ITMAX to improve the accuracy of the surcharge computation. If, on the other hand, the user finds that most or all of the iterations do converge, he may decrease ITMAX or increase SURTOL to decrease the runtime of the model and, consequently, the cost. The user should also keep an eye on the continuity error to insure that a large loss of water is not caused by the iterations.

- In some large systems, more than one area may be in surcharge at the same time. If this occurs and the flows in these areas differ appreciably, those areas with the smallest flows may not converge, while areas with large flows will. This is because both the tolerance and flow differential are computed as sums of all flows in surcharge. It is possible, therefore, to assume convergence has occurred even when relatively large flow errors still exist in surcharge areas with small flows. If the user suspects this situation exists, he can compute a flow differential for any particular surcharge area by adding the differences between inflow to and outflow from each node in that surcharge area. Such information can be found in the intermediary printout. Whenever the flow differential computed in this way is a significantly large fraction of the average flow in this are, inaccurate results may be expected. To correct this, SURTOL can be decreased until the flow differntial for the area in question decreases to a small value over time. It should be noted, however, that large flow differentials for a short period of time are not unusual providing they decrease to near or below the established tolerance for most of the simulation.

- The simulation period is defined by the product NTCYC x DELT or the number of integration cycles times the length of each cycle. If this product exceeds the simulation period of the inflow hydrograph tape, an illegal end-of-file is encountered and execution stops. NTCYC must then be reduced to correspond with this simulation period.

- The length of all conduits in the transport system should be roughly constant and no less than 100 feet. This constraint may be difficult to meet in the vicinity of weirs and abrupt changes in pipe configurations which must be represented in the model. However, the length of the shortest conduit does directly determine the maximum time step and the number of pipe elements, both of which in turn control the cost of simulation as indicated in Chapter 2. The use of longer pipes should be facilitiated through use of equivalent sections and slopes in cases where significant changes in pipe shape, cross sectional area and gradient must be represented in the model.

- In EXTRAN, printed output can be requested for a maximum of 20 nodes and conduits. In addition, the number of printed points for a given node or conduit is automatically set at 100 regardless of the length of simulation. This requires that the print frequency control variable INTER is defined strictly by the criterion:

$$\frac{NTCYC - NSTART}{INTER}$$

where all variables are as defined in Chapter 2. If, for example, NTCYC = 1600 and NSTART = 9, and we had selected

INTER = 10 then the ratio (NTCYC - NSTART) - INTER = 159. Because the 100-value printing arrays would then be filled with 159 values, an overflow situation would occur thereby producing output which is badly scrambled at best and unusable at worst. Therefore, it is worthwhile to look closely at INTER prior to any major EXTRAN run.

- Prior to a lengthy run of EXTRAN for a new system, a short test run of perhaps five integration cycles should be made to confirm that the link-node model is properly connected and correctly represents the prototype. This check should be made of the echo printed data showing respectivley the connecting nodes for each node. The geometric-hydraulic data for each pipe and junction should also be confirmed. Particular attention should be paid to the nodal location of weirs, orifices, and outfalls to ensure these conform to the prototype system. In addition, the total number of conduits and junctions, including internal links and nodes created, can be determined from the Internal Connectivity Table. This information is necessary for proper specification of initial heads and flows at time zero in the simulation.

- The introduction of a ZP invert elevation difference for all pipes connecting a single junction will cause the junction invert elevation to be incorrectly specified. This, in turn, will create errors in hydraulic computation later in the simulation. The junction invert must be at the same elevation as the invert of the lowest pipe either entering or leaving the junction or it is improperly defined. This problem is readily corrected by checking the punched conduit data cards to determine where a non-zero ZP should be set to zero.

CHAPTER 5

FORMULATION OF EXTRAN

GENERAL

A conceptual overview of EXTRAN is shown in Figure 15. As shown here, the specific function of EXTRAN is to route inlet hydrographs through the network of pipes, junctions, and flow diversion structures of the main sewer system to the treatment plant interceptors and receiving water outfalls. It has been noted in Chapter 2 that the boundary between the RUNOFF and EXTRAN Models is dependent on the objectives of the simulation. EXTRAN must be used whenever it is important to represent severe backwater conditions and special flow devices such as weirs, orifices, pumps, storage basins, and tide gates. Normally, these conditions occur in the lower reaches of the drainage system when pipe diameters exceed roughly 20 inches (50 cm). The Runoff Model, on the other hand, is well suited for the simulation of overland and small pipe flow in the upper regions of the system where the kinematic assumptions of uniform flow hold.

As shown in Figure 15, EXTRAN simulates the following elements, pipes manholes (pipe junctions), weirs, orifices, pumps, storage basins, and outfall structures. These elements and their associated properties are summarized in Tables 16 and 17. Output from EXTRAN takes the form of 1) discharge hydrographs and velocities in selected conduits in printed and plotted form; and 2) flow depths and water surface elevations at selected junctions in printed and plotted form. This output is supplied by off-line storage (e.g., discs, tapes) to a subsequent block, e.g., the Receiving Water Block.

CONCEPTUAL REPRESENTATION OF THE TRANSPORT SYSTEM

EXTRAN uses a link-node description of the sewer system which facilitates the discrete representation of the physical prototype and the mathematical solution of the gradually-varied unsteady flow equations which form the mathematical basis of the model.

As shown in Figure 16, the conduit system is idealized as a series of links or pipes which are connected at nodes or junctions. Links and nodes have well defined properties which, taken together, permit representation of the entire pipe network. Moreover, the link-node concept is very useful in representing flow control devices. The specific properties of links and nodes have been summarized in Table 17.

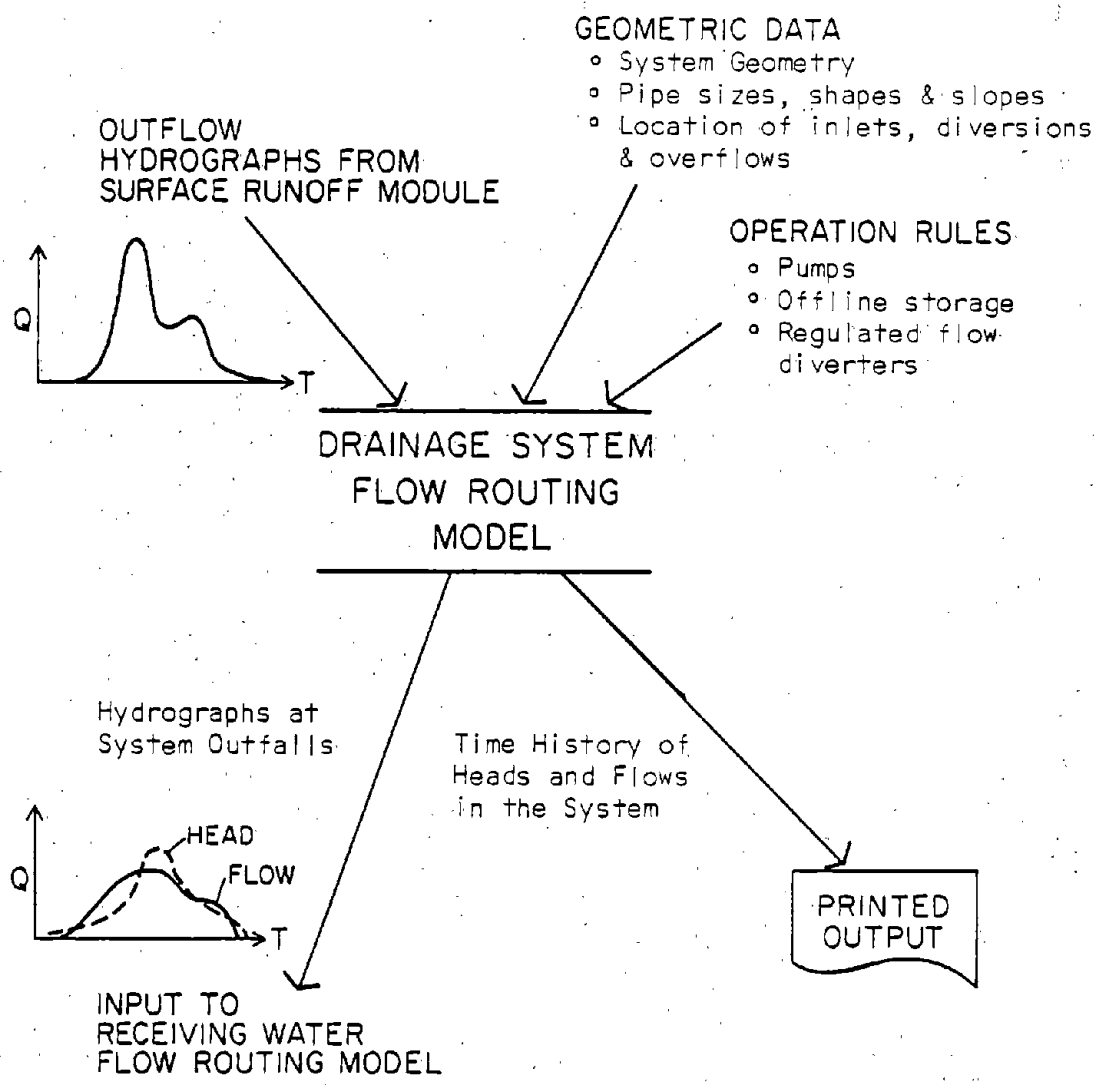

Figure 15. Schematic illustration of EXTRAN

TABLE 16

CLASSES OF ELEMENTS INCLUDED IN THE TRANSPORT MODEL

Element Class	Types
Conduits or Links	Rectangular Circular Horseshoe Baskethandle Eggshape Trapezoid
Junctions or Nodes (Manholes)	-----
Diversion Structures	Orifices Transverse weirs Sideflow weirs
Pump Stations	On-line or off-line pump station
Storage Basins	On-line (enlarged pipes or tunnels)
Outfall Structures	Transverse weir with tide gate Transverse weir without tide gate Sideflow weir with tide gate Sideflow weir without tide gate Outfall with tide gate Free outfall without tide gate

TABLE 17

PROPERTIES OF NODES AND LINKS IN THE TRANSPORT MODEL

	Properties and Constraints
NODES	
Constraint	ΣQ = change in storage
Properties computed at each time-step	Volume Surface area Head
Constant Properties	Invert, crown, and ground elevations
LINKS	
Constraint	Qin = Qout
Properties computed at each time-step	Cross-sectional area Hydraulic radius Surface width Discharge Velocity of flow
Constant Properties	Head loss coefficients Pipe shape, length, slope, roughness,

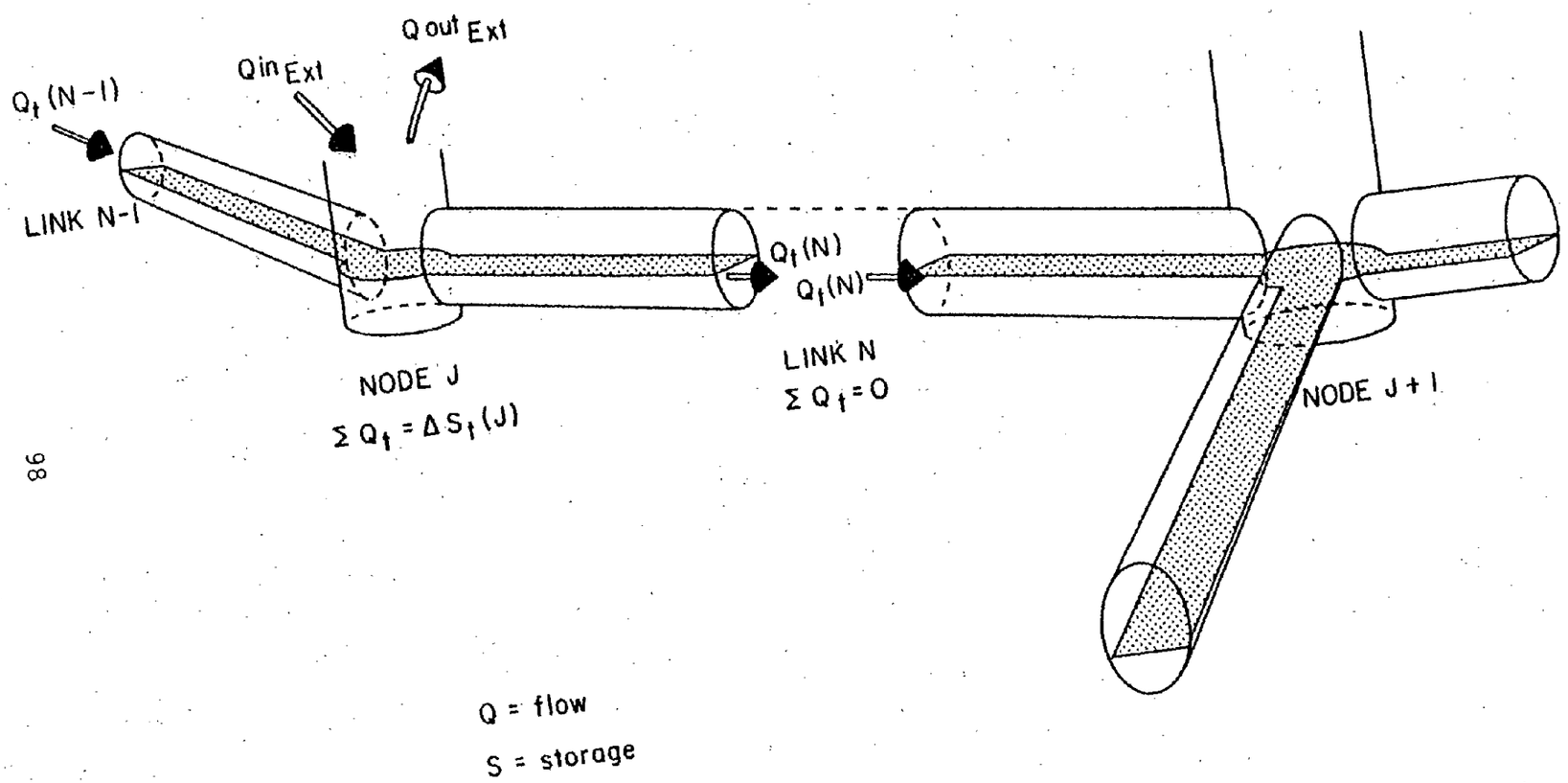

Figure 16. Conceptual representation of the EXTRAN model.

Links transmit flow from node to node. Properties associated with the links are roughness, length, cross-sectional area, hydraulic radius, and surface width. The last three properties are functions of the instantaneous depth of flow. The primary dependent variable in the links is the discharge, Q. It is assumed that Q is constant in the link, while velocity and the cross-sectional area of flow, or depth, are variable in the link. In the early development of EXTRAN, a constant velocity approach was used, but this was found later to produce highly unstable solutions.

Nodes are the storage elements of the system and correspond to manholes or pipe junctions in the physical system. The variables associated with a node are volume, head, and surface area. The primary dependent variable is the head, H, which is assumed to be changing in time but constant throughout any one node. Inflows, such as inlet hydrographs, and outflow, such as weir diversions, take place at the nodes of the idealized sewer system. The volume of the node at any time is equivalent to the water volume in the half-pipe lengths connected to any one node. The change in nodal volume during a given time step, Δt, forms the basis of head and discharge calculations as discussed below.

BASIC FLOW EQUATIONS

The basic differential equations for the sewer flow problem come from the gradually varied, unsteady flow equations for open channels, otherwise known as the Saint-Venant or shallow water equations. The equation for unsteady spatially varied discharge can be written:

$$\frac{\partial Q}{\partial t} = -gAS_f + 2V\frac{\partial A}{\partial t} + V^2\frac{\partial A}{\partial x} - gA\frac{\partial H}{\partial x} \tag{9}$$

where

Q = discharge through the conduit
V = velocity in the conduit
A = cross-sectional area of the flow
H = hydraulic head
S_f = friction slope

The friction slope is defined by Manning's equation, i.e.

$$S_f = \frac{k}{gAR^{4/3}} \quad Q|V| \tag{10}$$

where $k = g(n/1.49)$. Use of the absolute value sign on the velocity terms makes S_f a directional quantity and ensures that the frictional force always opposes the flow. Substituting in equation 9 and expressing the finite difference form gives:

$$Q_{t+\Delta t} = Q_t - \frac{k\Delta t}{R^{4/3}} |V| \; Q_{t+\Delta t} + 2V\frac{\Delta A}{\Delta t}\Delta t + V^2 \frac{A_2-A_1}{L}\Delta t - gA\frac{H_2-H_1}{L}\Delta t \tag{11}$$

Solving equation 11 for $Q_{t+\Delta t}$ gives the final finite difference form or the dynamic flow equation as:

$$Q_{t+\Delta t} = \frac{1}{1 + \frac{k \cdot \Delta t}{\bar{R}^{4/3}} |V|} \left(Q_t + 2\bar{V}\ \Delta A + \bar{V}^2 \frac{A_2 - A_1}{L}\ \Delta t - g\bar{A}\ \frac{H_2 - H_1}{L}\ \Delta t \right) \qquad (12)$$

In equation 12, the values $\bar{V}$, $\bar{R}$, and $\bar{A}$ are weighted averages of the conduit end values at time t.

The basic unknowns in equation 12 are $Q_{t+\Delta t}$, H_2 and H_1. The variables $\bar{V}$, $\bar{R}$, and $\bar{A}$ can all be related to Q and H. We, therefore, require another equation relating Q and H. This can be obtained by writing the continuity equation at a node.

$$\left.\frac{\partial H}{\partial t}\right|_t = \frac{\Sigma Q_t}{A_{s_t}} \qquad (13)$$

or in finite difference form

$$H_{t+\Delta t} = H_t + \frac{\Sigma Q_t \Delta t}{A_{s_t}} \qquad (14)$$

SOLUTION OF FLOW EQUATION BY MODIFIED EULER METHOD

Equations 12 and 14 can be solved sequentially to determine discharge in each link and head at each node over a time-step Δt. The numerical integration of equations 12 and 14 is accomplished by a modified Euler method. The results are accurate and, when certain constraints are followed, stable. Figure 17 shows how the process would work if only the discharge equation were involved. The first three operations determine the slope $\partial Q/\partial t$ at the "half-step" value of discharge. In other words, it is assumed that the slope at time $t + \Delta t/2$ is the mean slope during the interval. The method is extended easily to more than one equation, although graphic representation is then very difficult. The corresponding half-step and full-step calculations of head are shown below:

<u>Half-step at node j: Time $t + \Delta t/2$</u>

$$H_j(t + \tfrac{\Delta t}{2}) = H_j(t) + \frac{1}{2} \Sigma \left[Q(t) + Q(t + \tfrac{\Delta t}{2})\right] + \Sigma\ Q(t + \tfrac{\Delta t}{2})\ /AS_j(t) \qquad (15)$$

conduits, surface runoff, diversions, pumps, outfalls

<u>Full-step at node j: Time $t + \Delta t$</u>

$$H_j(t + \Delta t) = H_j(t) + \frac{1}{2}\ \Sigma \left[Q(t) + Q(t + \Delta t)\right] + \Sigma\ Q(t + \Delta t)\ /AS_j(t) \qquad (16)$$

conduits, surface runoff, diversions, pumps, outfalls

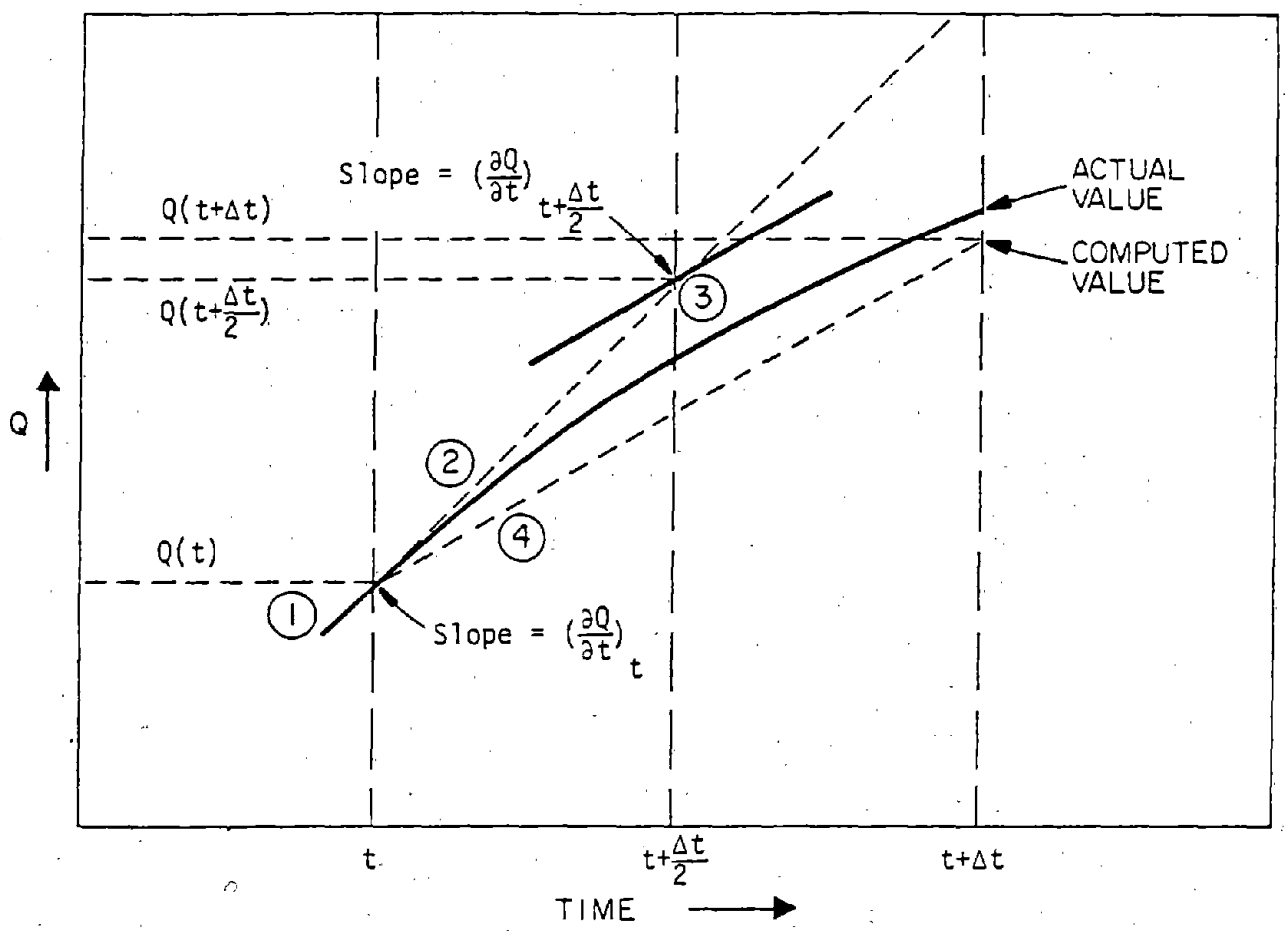

1. Compute $(\frac{\partial Q}{\partial t})_t$ from properties of system at time t

2. Project $Q(t+\frac{\Delta t}{2})$ as $Q(t+\frac{\Delta t}{2}) = Q(t) + (\frac{\partial Q}{\partial t})_t \frac{\Delta t}{2}$

3. a. Compute system properties at $t+\frac{\Delta t}{2}$

   b. Form $(\frac{\partial Q}{\partial t})_{t+\frac{\Delta t}{2}}$ from properties of system at time $t+\frac{\Delta t}{2}$

4. Project $Q(t+\Delta t)$ as $Q(t+\Delta t) = Q(t) + (\frac{\partial Q}{\partial t})_{t+\frac{\Delta t}{2}} \Delta t$

Figure 17. Modified Euler solution method for discharge based on half-step, full-step projection.

Note that the half-step computation of head uses the half-step computation of discharge in all connecting conduits. Similarly, the full-step computation requires the full-step discharge at time $t + \Delta t$ for all connecting pipes. In addition, the inflows to and diversions from each node by weirs, orifices, and pumps must be computed at each half and full-step. The total sequence of discharge computations in the links and head computations in the nodes can be summarized as:

1. Compute half-step discharge at $t + \Delta t/2$ in all links based on preceding full-step values of head at connecting junctions.

2. Compute half-step flow transfers by weirs, orifices, and pumps at time $t + \Delta t/2$ based on preceding full-steps values of head at transfer junction.

3. Compute half-step head at all nodes at time $t + \Delta t/2$ based on average of preceding full-step and current half-step discharges in all connecting conduits, plus flow transfers at the current half-step.

4. Compute full-step discharge in all links at time $t + \Delta t$ based on half-step heads at all connecting nodes.

5. Compute full-step flow transfers between nodes at time $t + \Delta t$ based on current half-step heads at all weir, orifice, and pump nodes.

6. Compute full-step head at time $t + \Delta t$ for all nodes based on average of preceding full-step and current full-step discharges, plus flow transfers at the current full-step.

NUMERICAL STABILITY

The modified Euler method yields a completely explicit solution in which the motion equation is applied to discharge in each link and the continuity equation to head at each node entirely without implicit coupling. It is well known that explicit methods involve fairly simple arithmetic and require little storage space compared to implicit methods. However, they are generally less stable and often require very short time-steps. From a practical standpoint, experience with EXTRAN has indicated that the program is stable numerically when the following inequalities are met:

Conduits:

$$\Delta t \leq \frac{L}{\sqrt{gD}} \tag{17}$$

where L is the pipe length in feet, g is gravity (ft/sec), D is the pipe depth, and Δt the time step in seconds.

Nodes:

$$\Delta t \leq \frac{C' A_s H_{max}}{\Sigma Q} \tag{18}$$

where C' is a dimensionless constant determined by experience to be approximately 0.10, ΔH_{max} is the maximum water-surface rise in time-step Δt, A_s is the corresponding surface area of the node, and ΣQ is the net inflow to the junction.

Examination of inequalities 17 and 18 reveals that the maximum allowable time, Δt, will be determined by the shortest, smallest pipe having high inflows. Based on past experience with EXTRAN, a time-step of 10 seconds is nearly always sufficiently small to produce outflow hydrographs and state-time traces which are free from spurious oscillation and also satisfy mass continuity under non-flooding conditions. In most applications, 15 to 30 second time-steps are adequate; occasionally time steps up to 60 seconds can be used.

Equivalent Pipes

An equivalent pipe is the computational substitution of an actual element of the drainage system by an imaginary conduit which is hydraulically identical to the element it replaces. Usually, an equivalent pipe is used when it is suspected that a numerical instability will be caused by the element of the drainage system being replaced in the computation. Short conduits and weirs are known at times to cause stability problems and thus occasionally need to be replaced by an equivalent pipe. (Orifices are automatically converted to equivalent pipes by the program; see the description below.)

The equivalent pipe substitution used by EXTRAN involves the following steps. First the flow equation for the element in question is set equal to the flow equation for an "equivalent pipe". This, in effect, says that the head losses in the element and its equivalent pipe are the same. The length of the equivalent pipe is computed using the numerical stability equation 17. Then, after making any additional assumptions which may be required about the equivalent pipe's dimensions, a Manning's n is computed based on the equal head loss requirement. In the case of orifices, this conversion occurs internally in EXTRAN, but in those cases where short pipes and weirs are found to cause instabilities, the user must make the necessary conversion and revise the input data set. Chapter 2 of this report outlines the steps needed to make these conversions.

SPECIAL PIPE FLOW CONSIDERATIONS

The solution technique discussed in the preceding paragraphs cannot be applied without modification to every conduit for the following reasons. First, the invert elevations of pipes which join at a node may be different since sewers are built frequently with invert discontinuities. Second, critical depth may occur in the conduit and thereby restrict the discharge. Third, normal depth may control. Finally, the pipe may be dry. In all of these cases, or combinations thereof, the flow must be computed by special techniques. Figure 18 shows each of the possibilities and describes the way in which surface area is assigned to the nodes. The options are:

1. Normal case. Flow computed from motion equation. Half of surface area assigned to each node.

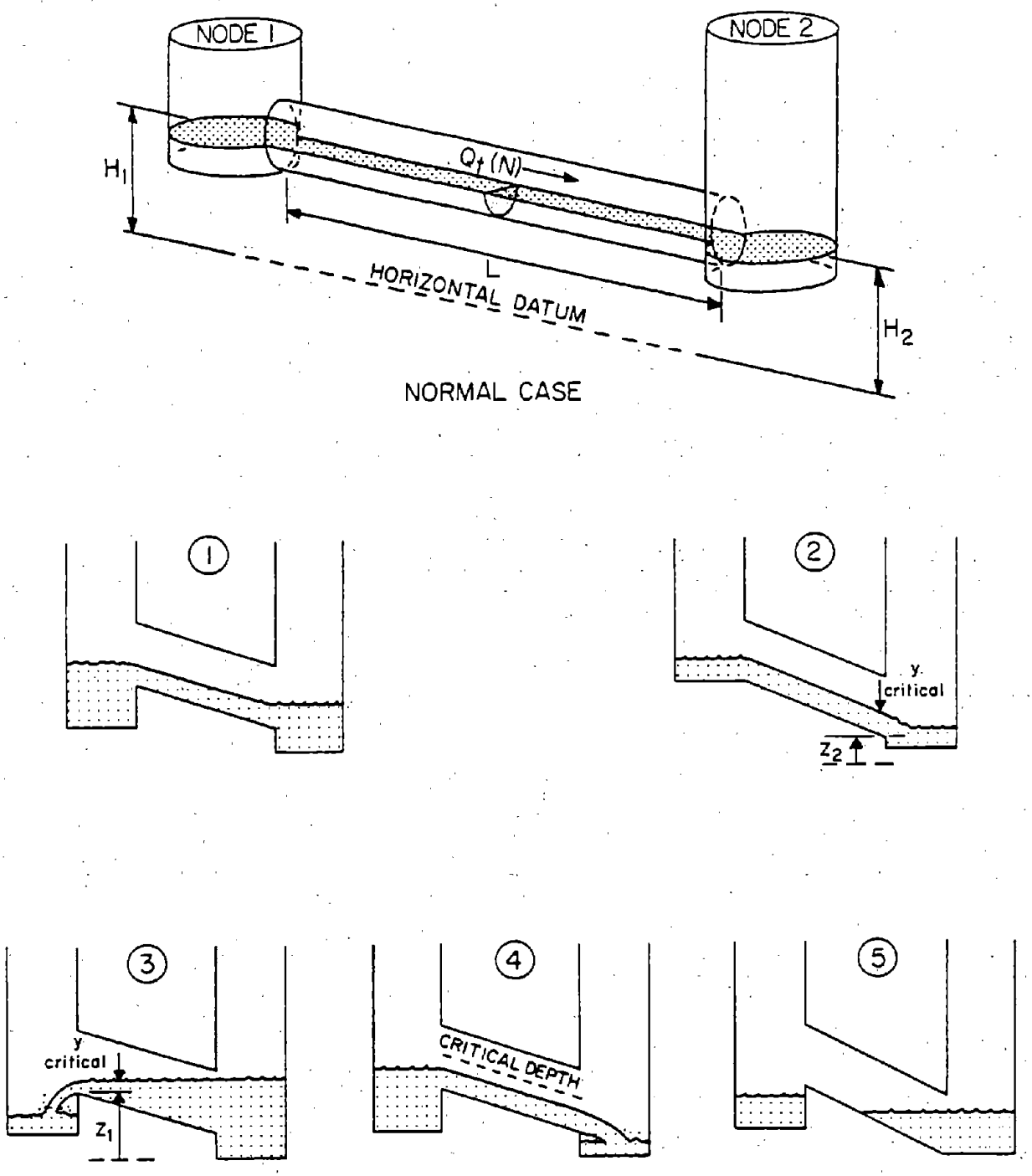

Figure 18. Special hydraulic cases in EXTRAN flow calculations.

2. Critical depth downstream. Use lesser of critical or normal depth downstream. Assign all surface area to upstream node.

3. Critical depth upstream. Use critical depth. Assign all surface area to downstream node.

4. Flow computed exceeds normal flow at a supercritical depth. Set flow to normal value. Assign surface area in usual manner as in (1).

5. Dry pipe. Set flow to zero. If any surface area exists, assign to downstream node.

Once these depth and surface area corrections are applied, the computations of head and discharge can proceed in the normal way for the current time-step. Note that any of these special situaitons may begin and end at various times and places during simulation. EXTRAN detects these automatically.

HEAD COMPUTATION DURING SURCHARGE AND FLOODING

Another hydraulic situation which requires special treatment is the occurrence of surcharge and flooding. Surcharge occurs when all pipes entering a node are full or when the water surface at the node lies between the crown of the highest entering pipe and the ground surface.

Flooding is a special case of surcharge which takes place when the hydraulic grade line breaks the ground surface and water is lost from the sewer node to the overlying surface system. While it would be possible to track the water lost to flooding by surface routing, this is not done in the present version of EXTRAN.

During surcharge, the head calculation in equations 15 and 16 is no longer possible because the surface area of the surcharged node is zero. Thus, the continuity equation for node j at time t is

$$\Sigma Q(t) = 0 \tag{19}$$

where $\Sigma Q(t)$ is all inflows to and outflows from the node from surface runoff, conduits, diversion structures, pump, and outfalls.

Since the flow and continuity are not solved simultaneously in the model, the flows computed in the links connected to node j will not satisfy equation 19. However, computing $\partial Q/\partial H_j$ for each link conected to node j, a head adjustment can be computed such that the continuity equation is satisfied. Rewriting equation 19 in terms of the adjusted head gives:

$$\Sigma(Q(t) + \frac{\partial Q(t)}{\partial H_j} \Delta H_j(t)) = 0 \tag{20}$$

which can be solved for ΔH_j as

$$\Delta H_j(t) = -\Sigma Q(t)/\Sigma \frac{\partial Q(t)}{\partial H_j} \tag{21}$$

This adjustment is made by half-steps during surcharge so that the half-step correction is given as:

$$H_j\ (t + \frac{\Delta t}{2}) = H_j(t) + k\Delta H_j(t + \frac{\Delta t}{2}) \tag{22}$$

where $H_j(t + \Delta t/2)$ is given by equation 21, while the full-step head is computed as:

$$H_j\ (t + \Delta t) = H_j(t + \frac{\Delta t}{2}) + k\ \Delta H_j(t) \tag{23}$$

where $\Delta H_j(t)$ is described by equation 21. The value of the constant k theoretically should be 1.0. However, it has been found that equation 22 tends to overcorrect the head; therefore, a value of 0.5 is used for k in the half-step computation which gives much better results. It has also been found that oscillations are triggered at upstream terminal junctions when these values of k are used. Therefore, to eliminate the oscillations, values of 0.3 and 0.6 are automatically set for k in the half-step and full-step computations, respectively, at these nodes.

Use of $\partial Q(t)/\partial H_j$, as mentioned above, satisfies continuity. Unfortunately, though, the explicit solution technique cannot meet the physical constraint of the inflows to surcharged areas of the system equaling the outflows. Because of this inert constraint, the surcharge heads fall below their actual physical values. In order to boost these heads to their expected values, the full-step computations of flow and head in surcharge areas are repeated in an iteration loop. The iterations for a particular time-step continue until one of the following two conditions is met:

1. The net difference of inflows to and outflows from all nodes in surcharge in less than a tolerance, computed every time-step as a fraction of the average flow through the surcharge area. The fraction is input by the user.

2. The number of iterations exceeds a maximum set by the user.

The iteration loop has been found to produce accurate results with little continuity error. The user may need to experiment somewhat with the user input values in order to accurately simulate all surcharge points without incurring an unreasonably high computer cost due to extra iterations.

For various types of links connected to a node, $\partial Q/\partial H$ is computed as follows:

<u>Conduits</u>

$$\frac{\partial Q(t)}{\partial H_j} = \frac{32.2}{1-K(t)}\ \Delta t\ (\frac{A(t)}{L}) \tag{24}$$

where

$$K(t) = -\Delta t \frac{32.2\ n^2}{2.208\ R^{4/3}} \ |V(t)|$$

Δt = time interval
$A(t)$ = flow cross sectional area in the conduit
L = conduit length
n = Manning n
R = hydraulic radius for the full conduit
$V(t)$ = velocity in the conduit

System Inflows

$$\frac{\partial Q(t)}{\partial H_j} = 0 \tag{25}$$

Orifice, Weir, Pump, or Outfall Diversions

Orifices are converted to equivalent pipes (see below); therefore, equation 24 is used to compute $\partial Q/\partial H$. For weirs, $\partial Q/\partial H$ in the weir link is taken as zero, i.e., the effect of the flow changes over the weir due to a change in head is ignored in adjusting the head at surcharged weir junctions. (The weir flow, of course, is computed in the next time-step on the basis of the adjusted head.) As a result, the solution may go unstable under surcharge conditions. If this occurs, the weir should be changed to an equivalent pipe as described in Chapter 2, under Card Group 12.

$\partial Q/\partial H$ for pump junctions is also taken as zero. For off-line pumps (with a wet well), this is a valid statement since Q_{pump} is determined by the volume in the wet well, not the head at the junction. For in-line pumps, where the pump rate is determined by the water depth at the junction, a problem could occur if the pumping rate is not set at its maximum value at a depth less than surcharge depth at the junction. This situation should be avoided, if possible, because it could cause the solution to go unstable if a large step increase or decrease in pumping rate occurs while the pump junction is surcharged.

For all outfall pipe, the head adjustment at the outfall is treated as any other junction. Outfall weir junctions are treated the same as internal weir junctions ($\partial Q/\partial H$ for the weir link is taken as zero). Thus, unstable solutions can occur at these junctions also under surcharge conditions. Converting these weirs to equivalent pipes will eliminate the stability problem.

Because the head adjustments computed in equations 22 and 23 are approximations, the computed head has a tendency to "bounce" up and down when the conduit first surcharges. This bounding can cause the solution to go unstable in some cases; therefore, a transition function is used to smooth the changeover from head computations by equations 15 and 16 to equation 22 and 23. The transition function used is:

$$\Delta H_j(t) = \frac{\partial Q(t)}{DENOM} \tag{26}$$

where

DENOM is given by

$$DEMON = \frac{\partial Q(t)}{\partial H_j} + (AS_j(t) - \frac{\partial Q(t)}{\partial H_j}) \exp(- \frac{15(y_j - D_j)}{D_j}) \qquad (27)$$

and

AS = the nodal surface area at 0.96 full depth
D_j = pipe diameter
y_j = water depth.

The exponential function causes equation 27 to converge within two percent of equation 21 by the time the water depth is 1.25 times the full flow depth.

Finally, it is noted that when flooding of the node above the ground surface is detected, EXTRAN automatically resets the water surface at the ground elevation of the node. Water rising above this level under flooding conditions is then lost from the system and does not return to the EXTRAN in the present version of the program.

FLOW CONTROL DEVICES

The link-node computations can be extended to include devices which divert sanitary sewage out of the storm drainage system or relieve the storm load on sanitary interceptors. In EXTRAN, all diversions are assumed to take place at a node and are handled as internodal transfers. The special flow regulation devices treated by EXTRAN include: weirs (both sideflow and transverse), orifices, pumps, and outfalls. Each of these is discussed in the paragraphs below.

Storage Devices

Storage devices in-line or off-line act as flow control devices by providing for storage of excessive upstream flows thereby attenuating and lagging the wet weather flow hydrograph from the upstream area. The conceptual representations of a storage junction and a regular junction are illustrated in Figure 19. Note that the only difference is that added surface area in the amount of ASTORE is added to that of the connecting pipes. Note also that ZCROWN(J) is set at the top of storage "tank". When the hydraulic head at junction J exceeds ZCROWN(J), the junction goes into surcharge.

Orifices

The purpose of the orifice generally is to divert sanitary wastewater out of the stormwater system during dry weather periods and to restrict the entry of stormwater into the sanitary interceptors during periods of runoff. The orifice may divert the flow to another pipe, a pumping station or an off-line storage tank.

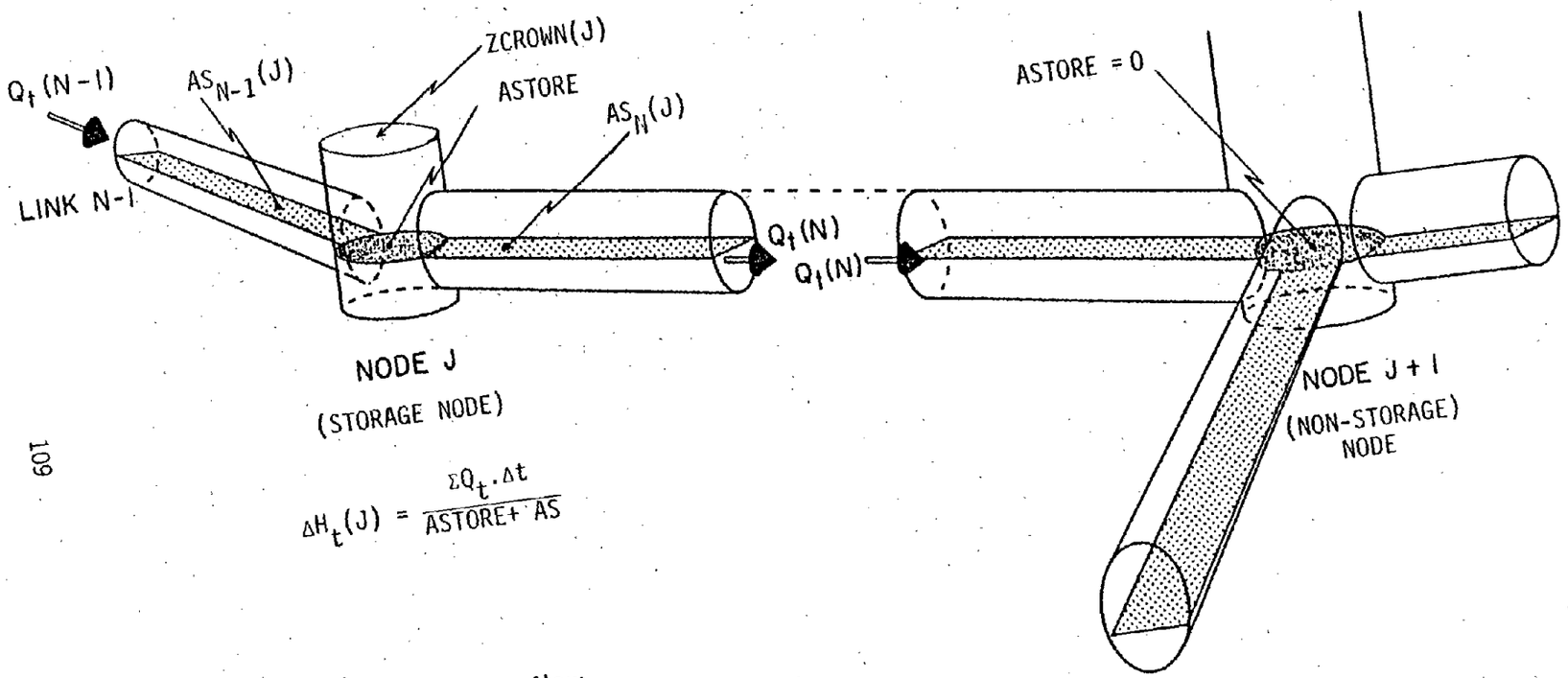

Q = flow

S = storage

Figure 19. Conceptual representation of a storage junction.

Figure 20 shows two typical diversions: 1) a dropout or sump orifice, and 2) a side outlet orifice. EXTRAN simulates both types of orifice by converting the orifice to an equivalent pipe. The converstion is made as follows. The standard orifice equation is:

$$Q_o = C_o A\sqrt{2gh} \tag{28}$$

where C_o is the discharge coefficient (a function of the type of opening and the length of the orifice tube), A is the cross-sectional area of the orifice, g is gravity, and h is the hydraulic head on the orifice. Values of C_o and A are specified by the user. To convert the orifice to a pipe, the program equates the orifice discharge equation and the Manning pipe flow equation, i.e.,

$$\frac{1.49}{n} AR^{2/3} S^{1/2} = C_o A\sqrt{2gh} \tag{29}$$

The orifice pipe is assumed to be nearly flat, the invert on the discharge side being set 0.01 feet lower than the invert on the inlet side. In addition, for a sump orifice, the pipe invert is set by the program 0.96D below the junction invert so that the orifice pipe is flowing full before any outflow from the junction occurs in any other pipe. For side outlet orifices, the user specifies the height of the orifice invert above the junction floor.

If we write S as H_s/L where L is the pipe length, H_s will be identically equal to h when the orifice is submerged. When it is not submerged, h will be the height of the water surface above the orifice centerline while H_s will be the distance of the water surface above critical depth (which will occur at the discharge end) for the pipe. For practical purposes, we can assume that $H_s = h$ for this case also. Thus, letting $s = h/L$ and substituting $R = D/4$ (where D is the orifice diameter) into equation 29 and simplifying, we have:

$$n = \frac{1.49}{\sqrt{2g}\, C_o} \cdot \frac{D^{2/3}}{L^{1/2}} \tag{30}$$

The length of the equivalent pipe is computed as the maximum of 200 feet or

$$L = 2\Delta t\sqrt{gD} \tag{31}$$

to insure that the celerity (stability) criteria for the pipe is not violated. n is then computed according to equation 30. This algorithm produces a solution to the orifice diversion that is not only as accurate as the orifice equation but also much more stable when the orifice junction is surcharged.

Weirs

A schematic illustration of flow transfer by weir diversion between two nodes is shown in Figure 21. Weir diversions provide relief to the sanitary

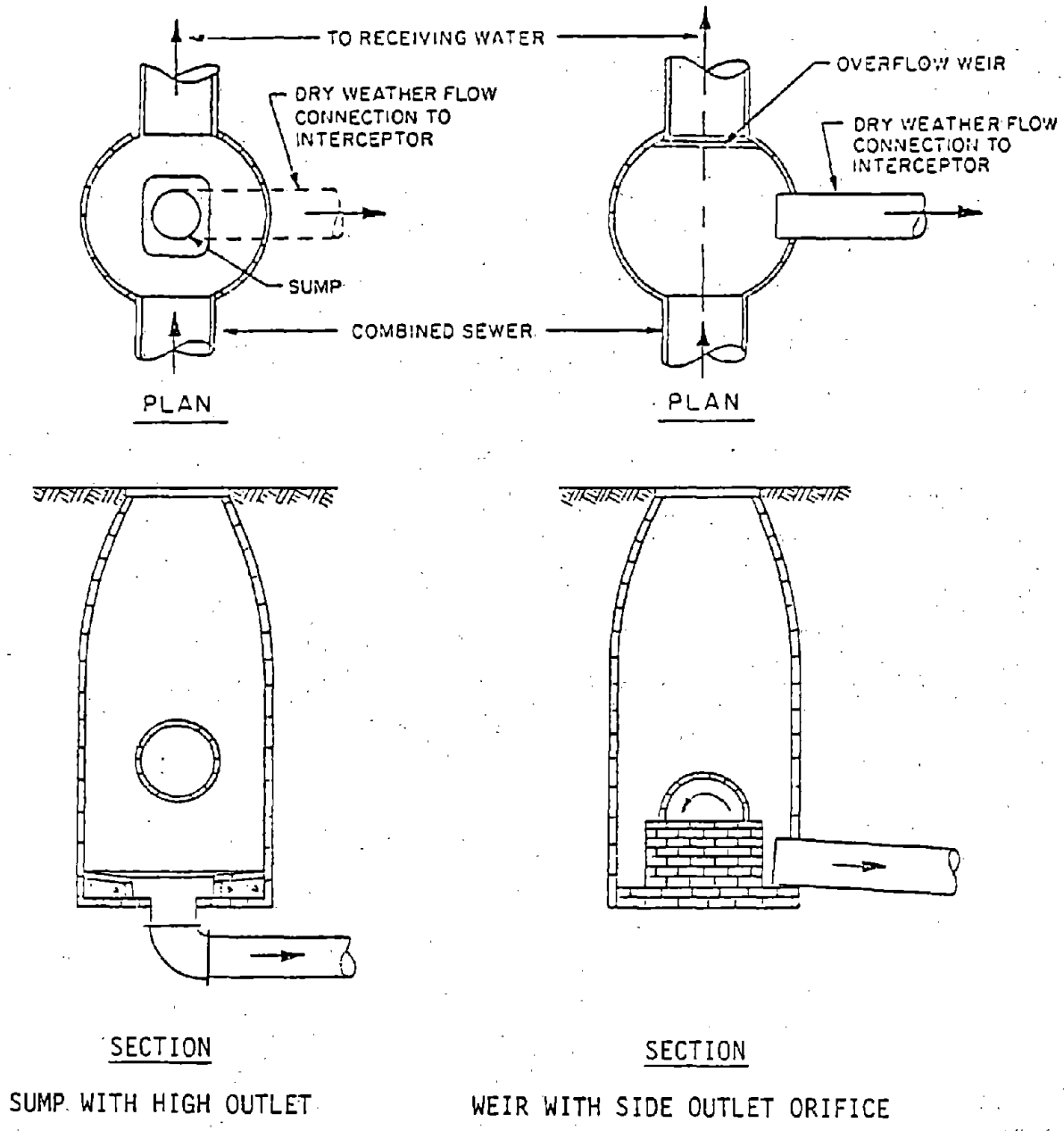

SUMP WITH HIGH OUTLET

WEIR WITH SIDE OUTLET ORIFICE

Figure 20. Typical orifice diversions.

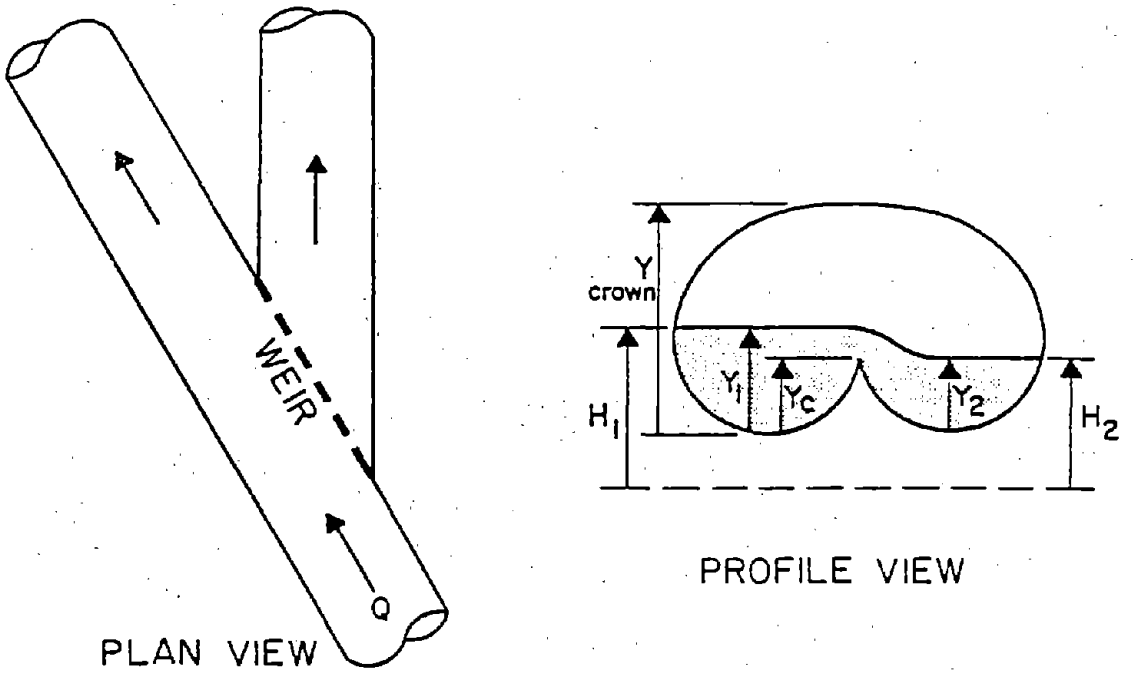

Schematic of a Weir Diversion

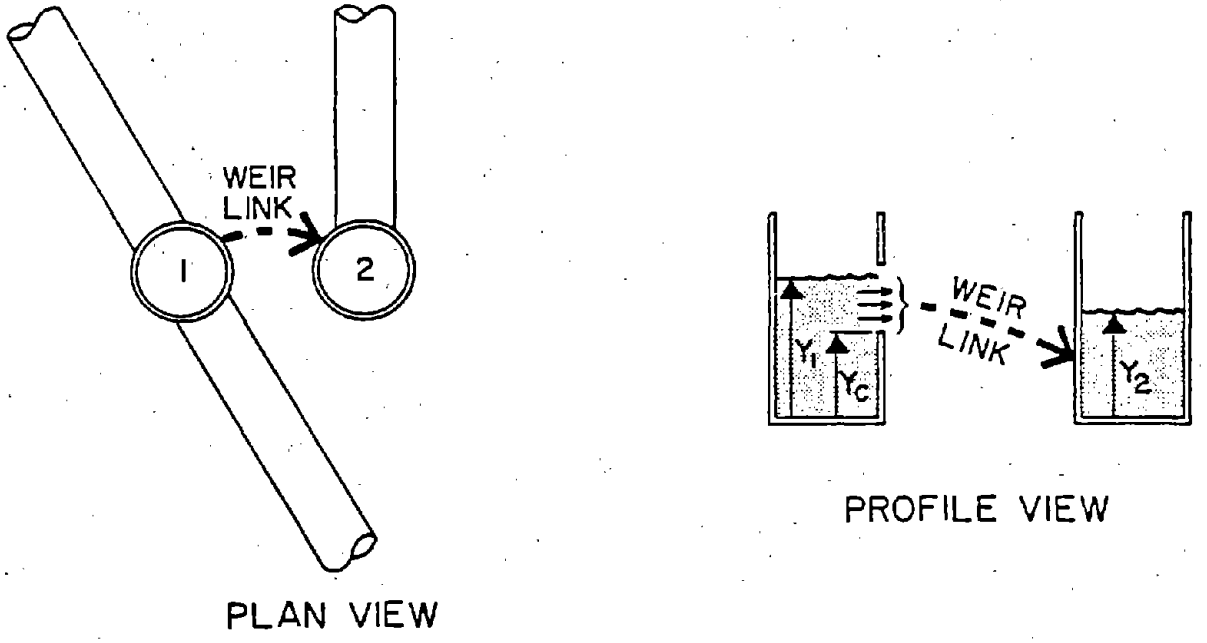

Conceptual Representation of a Weir Diversion

Figure 21. Representation of weir diversions.

system during periods of storm runoff. Flow over a weir is computed by the equation:

$$Q_w = C_w L_w [(h + \frac{v^2}{2g})^a - (\frac{v^2}{2g})^a] \tag{32}$$

where

C_w = discharge coefficient
L_w = weir length
h = driving head on the weir
v = approach velocity
a = weir exponent; 3/2 for transverse weirs, 5/3 for sideflow weirs

Both C_w and L_w are input values for transverse weirs. For sideflow weirs, C_w should be a function of the approach velocity, but the present version of the program does not provide for this because of the difficulty in defining the approach velocity. For this same reason, v, which is programmed into the weir solution, is set to zero prior to computing Q_w.

Normally, the driving head on the weir is computed as the difference $h = Y_1 - Y_c$, where Y_1 is the water depth on the upstream side of the weir and Y_c is the height of the weir crest above the node invert. However, if the downstream depth Y_2 also exceeds the weir crest height, the weir is submerged and the flow is computed by equation 33.

$$Q_w = C_{SUB}\ C_w L_w (Y_1 - Y_c)^{3/2} \tag{33}$$

where C_{SUB} is a submergence coefficient representing the reduction in driving head and all other variables are as defined above.

The submergence coefficient, C_{SUB}, is taken from Roessert's Handbook of Hydraulics by interpolation from Table 18, where C_{RATIO} is defined as:

$$C_{RATIO} = \frac{Y_1 - Y_c}{Y_2 - Y_c} \tag{34}$$

and all other variables are as previously defined.

The values of C_{RATIO} and C_{SUB} are computed automatically by EXTRAN and no input data values are needed.

If the weir is surcharged it will behave as an orifice and the flow is computed as:

$$Q_w = C_{SUR}\ L_w\ (Y_{TOP} - Y_c)\ \sqrt{2gh'} \tag{35}$$

TABLE 18

VALUES OF C_{SUB} AS A FUNCTION OF DEGREE OF WEIR SUBMERGENCE

C_{RATIO}	C_{SUB}
0.00	1.00
0.10	0.99
0.20	0.98
0.30	0.97
0.40	0.96
0.50	0.95
0.60	0.94
0.70	0.91
0.80	0.85
0.85	0.80
0.90	0.68
0.95	0.40
1.00	0.00

where

Y_{TOP} = distance to top of weir opening shown in Figure 6
$h' = Y_1$ - maximum (Y_1, Y_c)
C_{SUR} = weir surcharge coefficient

The weir surcharge coefficient, C_{SUR}, is computed automatically at the beginning of surcharge. At the point where weir surcharge is detected, the preceding weir discharge just prior to surcharge is equated to Q_w in equation 34 and equation 35 is then solved for the surcharge coefficient, C_{SUR}. Thus, no input coefficient for surcharged weirs are required.

Finally, the present version of EXTRAN detects flow reversals at weir nodes which causes the downstream water depth, Y_2, to exceed the upstream depth, Y_1. All equations in the weir section remain the same except that Y_1 and Y_2 are switched so that Y_1 remains as the "upstream" head. Also, flow reversal of a sideflow weir causes it to behave more like a transverse weir and consequently the exponent as in equation 32 is set to 1.5

Weirs With Tide Gates

Frequently, weirs are installed together with a tide gate at points of overflow into the receiving waters. Flow across the weir is restricted by the tide gate, which may be partially closed at times. This is accounted for by reducing the effective driving head across the weir according to an empirical factor published by Armco(3):

$$h' = h - \frac{4}{g}v^2 \exp\left(\frac{-1.15v}{\sqrt{h}}\right) \qquad (36)$$

where h is the previously computed head before correction for flap gate and v is the velocity of flow in the upstream conduit.

PUMP STATIONS

A pump station is conceptually represented as either an in-line lift station, or an off-line node representing a wet-well, from which the contents are pumped to another node in the system according to a progammed rule curve. For an in-line lift station, the pump rate is based on the water depth at the pump junction. The rule is as follows:

$$\begin{aligned} \text{Pump Rate} &= R_1 \text{ for } 0 < Y < Y_1 \\ &= R_2 \quad\quad Y_1 < Y < Y_2 \\ &= R_3 \quad\quad\quad\quad Y < Y_3 \end{aligned}$$

For Y = 0, the pump rate is the inflow rate to the pump junction.

Inflows to the off-line pump must be diverted from the main sewer system through an orifice, a weir, or a pipe. The influent to the wet-well node must be a free discharge regardless of the diversion structure. The pumping rule curve is based on the volume of water in the storage junction. A schematic presentation of the pump rule is shown in Figure 22. The rule operates as follows:

1. Up to three wet-well volumes are prespecified as input data for each pump station: $V_1 < V_2 < V_3$, where V_3 is the maximum capacity of the wet well.

2 Three pumping rates are prespecified as input data for each station. The pump rate is selected automatically by EXTRAN depending on the volume in the wet-well, as follows:

   R_1 for the volume in wet-well $< V_1$
   R_2 for $V_1 <$ volume in wet-well $< V_2$
   R_3 for $V_2 <$ volume in wet-well $< V_3$

3. A mass balance of pumped outflow and inflow is performed in the wet-well during the model simulation period.

4. If the wet-well goes dry, the pump rate is reduced below rate R_1 until it just equals the inflow rate. When the inflow rate again equals or exceeds R_1, the pumping rate goes back to operating on the rule curve.

5. If V_3 is exceeded in the wet-well, the inflow to the storage node is reduced until it does not exceed the maximum pumped flow. Then the inflow falls below the maximum pumped flow, the inflow "gates" are opened. The program automatically steps down the pumping rate by the operating rule of (2) as inflows and wet-well volume decrease.

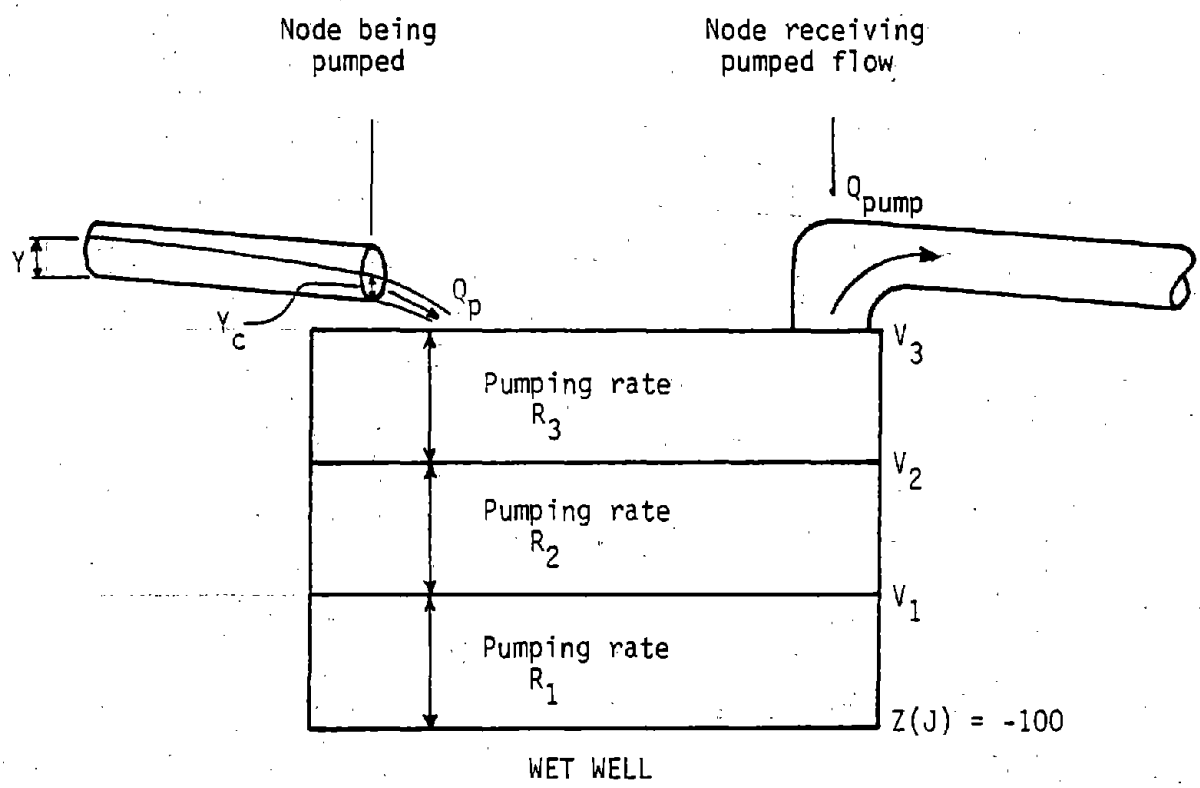

Pumping rate = R_1 for $V < V_1$
= R_2 for $V < V < V_2$
= R_3 for $V < V < V_3$

V is volume in wet well

Figure 22. Schematic Presentation of Pump Diversion.

OUTFALL STRUCTURES

EXTRAN simulates both weir outfalls and free outfalls. Either type may be protected by a tide gate. A weir outfall is a weir which discharges directly to the receiving waters according to relationships given previously in the weir section. The free outfall is simply an outfall conduit which discharges to a receiving water body under given backwater conditons. The free outfall may be truly "free" if the elevation of the receiving waters is low enough, or it may consist of a backwater condition. In the former case, the water surface at the free outfall is taken as critical or normal depth, whichever is less. If backwater exists, the receiving water elevation is taken as the water surface elevation at the free outfall.

When there is a tide gate on an outfall conduit, a check is made to see whether or not the hydraulic head at the upstream end of the outfall pipe exceeds that outside the gate. If it does not, the discharge through the outfall is equated to zero. If the driving head is positive, the water surface elevation at the outfall junction is set in the same manner as that for a free outfall subjected to a backwater condition.

CHAPTER 6

PROGRAM STRUCTURE OF EXTRAN

GENERAL

The EXTRAN Block is a set of computer subroutines which are organized to simulate the unsteady, gradually-varied movement of stormwater in a sewer network composed of conduits, pipe junctions, diversion structures, and free outfalls. A program flowchart for the major computation steps in the EXTRAN Block is presented in Figure 23. A full listing of the program, together with key variable definitions, is contained in Table A-3, Appendix A.

The EXTRAN Block contains 13 subroutines in addition to the main program which controls execution. The organization of each subroutine and its relation to the main program has been diagrammed in the master flowchart of Figure 24. A description of each subroutine follows in the paragraphs below.

SUBROUTINE EXTRAN

EXTRAN is the executive subroutine of the EXTRAN Block. It sets the unit numbers of the device containing the input data and the device where printed output will be directed. The device numbers of the input and output hydrograph tapes, if used, are also set here. Then the first two lines of the input hydrograph tape, if required, are read and this information is written on the output hydrograph tape, if used. Finally, subroutine TRANSX is called to perform the computations of the EXTRAN Block.

Presently, subroutine EXTRAN is set up to run the EXTRAN Block independently of the SWMM model. It can easily be changed to operate within SWMM by:

1. Removing the comment marks (C/////) from the first line of the program, leaving SUBROUTINE EXTRAN;

2. Changing the first executable line of the program from ISKIP=1 to ISKIP=0; and

3. Removing the comment marks (C/////) from the RETURN statement at the end of the subroutine.

SUBROUTINE TRANSX

TRANSX is the main controlling subprogram of the EXTRAN Block which drives all other subprograms and effectively controls the execution of EXTRAN as it has been presented graphically in the flowchart of Figure 23.

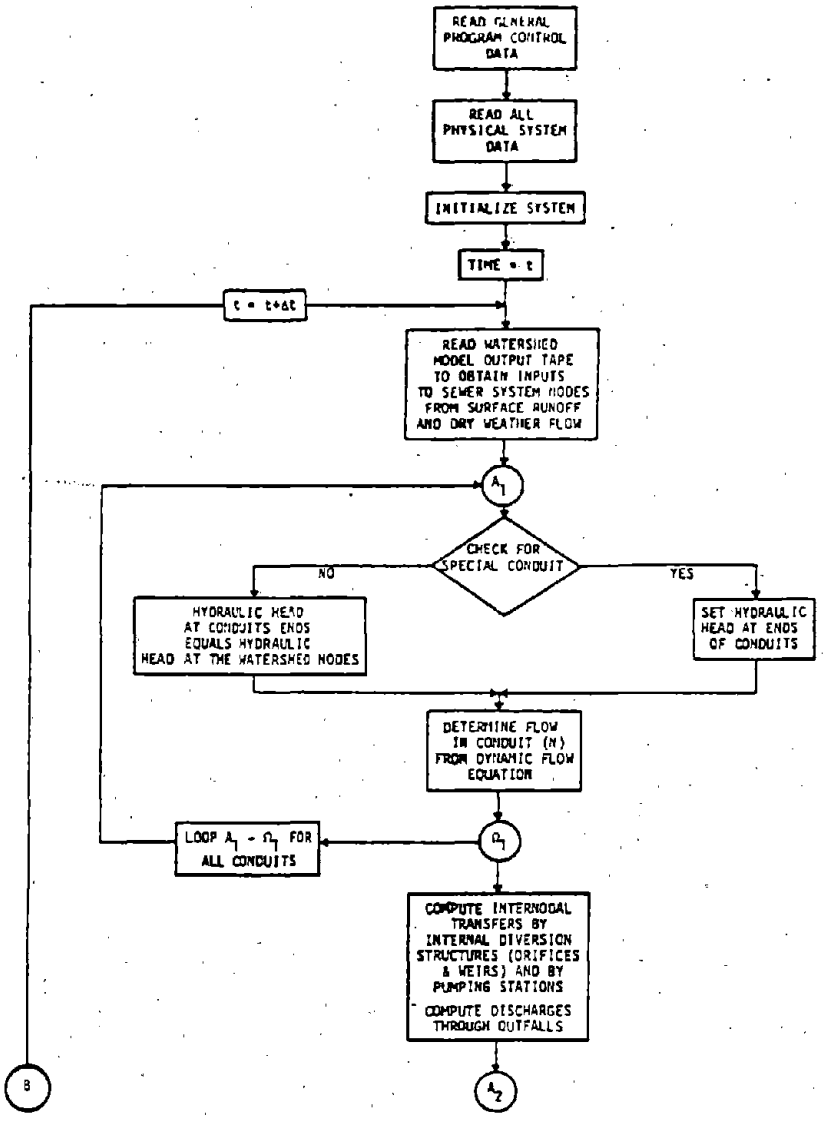

Figure 23. EXTRAN Block program flowchart

Reproduced from best available copy.

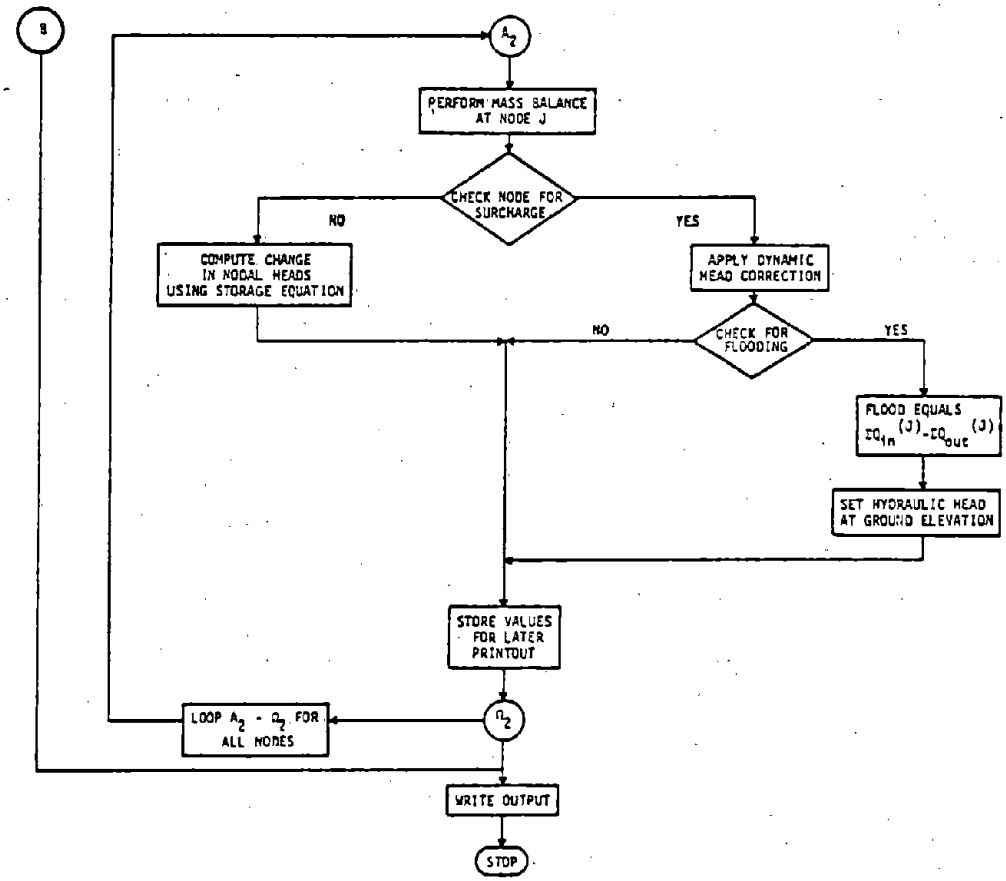

Figure 23. EXTRAN Block program flowchart (Continued)

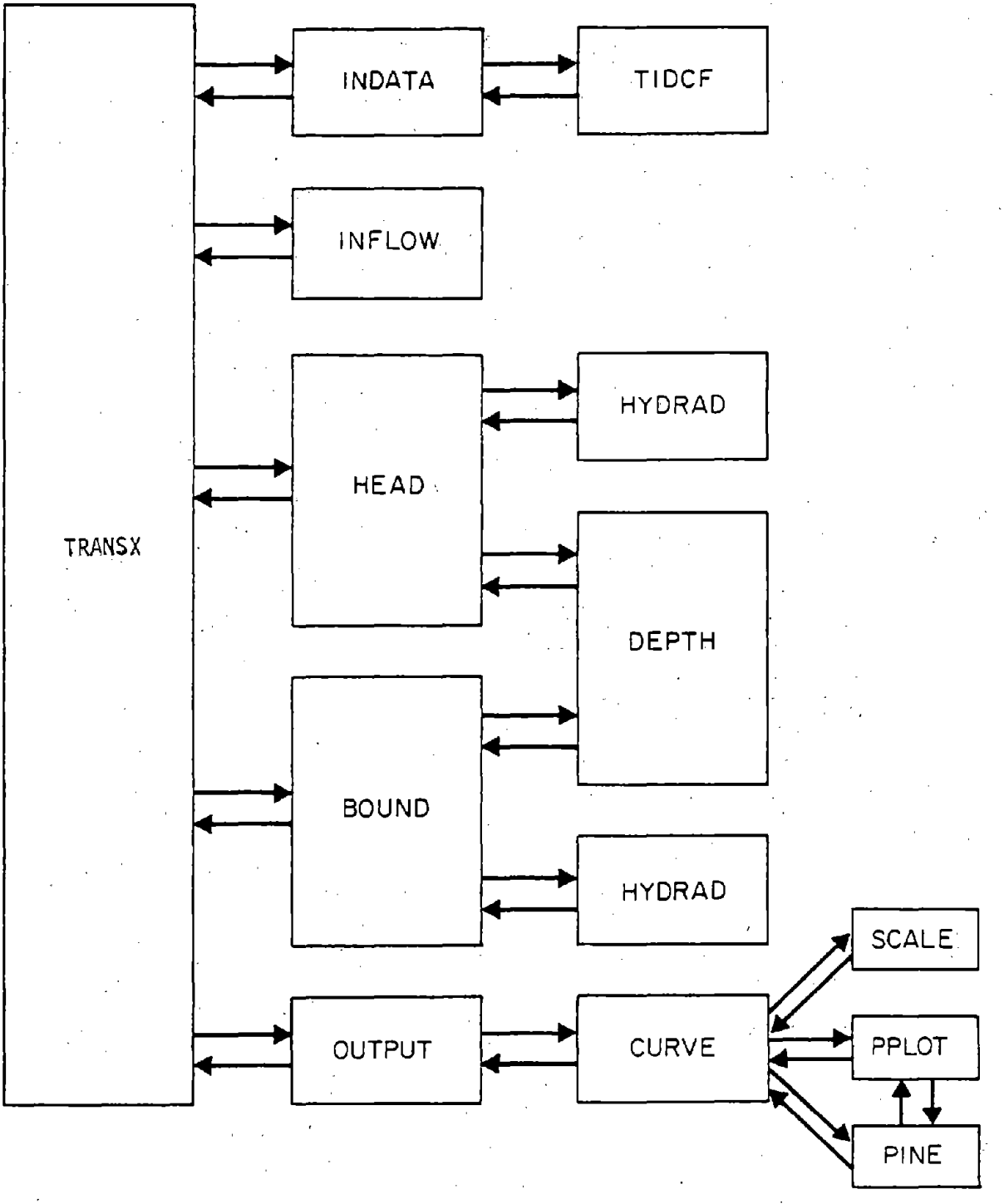

Figure 24. Master flowchart for the EXTRAN block.

Principal steps in TRANSX are outlines below in the order of their execution:

1. Call INDATA for reading all input data cards defining the length of the transport simulation run, the physical data for the transport system, and the instruction for output processing.

2. Initialize system flow properties and set time = TZERO.

3. Advance time = $t+\Delta t$ and begin main computation loop contained in steps 4 through 10 below.

4. Select current value of inflow hydrographs for all input nodes by call to INFLOW, which interpolates runoff hydrograph records either on tape unit N21 supplied by the RUNOFF Block or on data cards.

5. For all physical conduits in the system, compute the following time-changing properties based on the last full-step values of depth and flow:

   - Hydraulic head at each pipe end;

   - Full-step values of cross-sectional area, velocity, hydraulic radius, and surface area corresponding to preceding full-step flow. This is done by calling subroutine HEAD;

   - Half-step value of discharge at time $t=t+\Delta t/2$ by modified Euler solution;

   - Check for normal flow, if appropriate;

   - Set system outflows and internal transfers at time $t+\Delta t/2$ by call to subroutine BOUND. BOUND computes the half-step flow transfers at all orifices, weirs, and pumps at time $t=t+\Delta t/2$. It also computes the current value of tidal stage and the half-step value of depth and discharge at all outfalls.

   - Average flow in all pipes connected to junctions in surcharge. A fraction of this value is used as the tolerance of the surcharge iteration loop.

6. For all physical junctions in the system, compute the half-step depth at time $t=t+\Delta t/2$. This depth computation is based on the current net inflows to each node and the nodal surface areas computed previously in step 5. Check for surcharge and flooding at each node and compute water depth accordingly.

7. For all physical conduits, compute the following properties based on the last half-step values of depth and flow (repeat step 5 for time $t+\Delta t/2$):

   - Hydraulic head at each pipe end;
   - Half-step values of pipe cross-sectional area, velocity, hydraulic radius, and surface area corresponding to preceding half-step depth and discharge;
   - Full-step discharge at time $t+\Delta t$ by modified Euler solution;
   - Check for normal flow if appropriate;
   - Set system outflows and internal transfer at time $t+\Delta t$ by calling BOUND.

8. For all junctions, repeat the nodal head computation of step 6 for time $t+\Delta t$. Sum the differences between inflow and outflow for each junction in surcharge.

9. Repeat steps 7 and 8 for surcharged links and nodes until the sum of the flow differences from step 8 is less than the tolerance from step 5 or a maximum number of iterations is exceeded.

10. Store nodal water depths and water surface in junction print arrays to be used later by OUTPUT. Also, store conduit discharges and velocities for later printing. Print intermediate output.

11. Return to step 3 and repeat through step 10 until the transport simulation is complete for the entire period.

12. Call subroutine OUTPUT for printing and plotting of conduit flows and junction water surface elevations.

SUBROUTINE BOUND

The function of subroutine BOUND is to compute the half-step and full-step flow transfers by orifices, weirs, and pump stations. BOUND also computes the current level of receiving water backwater and determines discharge through system outfalls. A summary of principal calculations follows:

1. Compute current elevation of receiving water backwater. Depending on the tidal index, the backwater condition will be constant, tidal or below the system outfalls (effectively non-existent). The tidally varied backwater condition is computed by a Fourier series about a mean time equal to the first coefficient, A1.

2. Compute depth at orifice junction for sump orifice flowing less than full.

3. Compute discharge over transverse and sideflow weirs. Check for reverse flow, surcharge, and weir submergence. If weir is surcharged, compute flow by orifice-type equation. If weir is submerged, compute the submergence coefficient and re-compute weir flow. If a tide gate is present at weir node, then compute head loss, reduce driving head on weir and re-compute weir discharge.

4. Compute pump discharges based on current junction or wet-well level and corresponding pump rate. If wet-well is flooded, set pump rate at maximum level and reduce inflow.

SUBROUTINE DEPTH

Subroutine DEPTH computes the critical and normal depths corresponding to a given discharge using the critical flow and Manning uniform flow equations, respectively. Tables of normalized values for the cross-sectional area, hydraulic radius and surface width of each pipe class are taken from a Block Data element to speed the computations of critical and normal depth. Subroutine DEPTH is used by subroutines BOUND and HEAD.

SUBROUTINE HEAD

Subroutine HEAD is used to convert a nodal water depth to the depth of flow above the invert of a connecting pipe. Based on the depths of flow at each pipe end, HEAD computes the surface width and assigns surface area to the upstream and downstream node according to the following criteria:

1. For the normal situation in which both pipe inverts are submerged and the flow is sub-critical throughout the conduit, the surface area of that conduit is assigned equally to the two connecting junctions.

2. If a critical flow section is detected at the downstream end of a conduit, then surface area for that conduit is assigned to the upstream node.

3. If a critical section occurs at the upstream end, the conduit surface area is assigned to the downstream node.

4. For a dry pipe (pipe inverts unsubmerged), the surface area is zero. The velocity, cross-sectional area and hydraulic radius are set to zero for this case.

5. If the pipe is dry only at the upstream end, then all surface area for the conduit is assigned to the downstream junction.

Note that adverse flow in the absence of a critical section is treated as in (1) above. If a critical section occurs upstream, then all surface area for the adverse pipe is assigned downstream as in (3). The assignment of nodal surface area, based on the top width and length of conduit flow, is essential to the proper calculation of head changes computed at each node from mass continuity as discussed in Chapter 5. Following surface area assignment, HEAD computes the current weighted average values of cross-sectional area, flow velocity, and hydraulic radius for each pipe. Subroutine HEAD is called by program MAIN and it in turn uses subroutines DEPTH and HYDRAD in its surface area computations.

SUBROUTINE HYDRAD

The function of subroutine HYDRAD is to compute average values of hydraulic radius, cross-sectional area, and surface width for all conduits in the transport system. Based on the current water depth at the ends and midpoint of each conduit, HYDRAD computes from a table of normalized properties the current value of hydraulic radius, cross-sectional area, and surface width. HYDRAD is used by subroutine HEAD for computing nodal surface areas as described above. It is also called by BOUND for computing the cross-sectional area and average velocity of flow in the outfall pipe protected by a tide gate.

SUBROUTINE INDATA

INDATA is the principal input data subroutine for the EXTRAN Block which is used once at the beginning of subroutine TRANSX. Its primary function is to read all input data specifying the links, nodes, and special structures of the transport network. It also establishes transport system connectivity and sets up an internal numbering system for all transport elements by which the computations in TRANSX can be carried out. The principal operations of INDATA are listed below in the order they occur in the program:

1. Read first two title cards for output headings and run control card specifying the number of integration cycles, the length of the time-step, TZERO, and other parameters for output and run control.

2. Read external junction and conduit numbers for detailed printing and plotting of simulation output.

3. Read physical data for conduits and print a summary of all conduit data.

4. Read physical data for junctions and print summary of all junction data.

5. Set up internal numbering system for junctions and conduits and establish connectivity matrix. This matrix shows the connecting nodes at the end of each conduit and conversely the connecting links for each node in the transport system.

6. Read orifice input data and print summary. Assign internal link between orifice node and node to which it discharges.

7. Read weir input data and assign an internal link and node to each weir in the system. Print summary of all weir data.

8. Read pump data and assign an internal link number to each pump node. Print summary of all pumping input data. Set invert elevation and inflow index for pumped node.

9. Read free outfall data and print a data summary for outfalls. Assign an internal link for each free outfall in the internal numbering system.

10. Read tide-gated (non-weir) outfall data from cards and print a summary of tide gate data. Assign an internal link for each free outfall in the internal numbering system.

11. Print a summary of internal connectivity information showing the internal nodes and connecting links assigned to orifices, weirs, pumps, and free outfalls.

12. Read tidal boundary input data. Depending on the tidal index, one of the following four boundary conditions will exist:

    - No control water surface at the system outfalls;
    - All outfall control water surfaces at the same constant elevation, A1;
    - Tide coefficient read in by cards;
    - Tide coefficients A1 through A7 will be generated by TIDCF which are printed in subroutine TIDCF.

    Print summary of tidal boundary input data, including the tide coefficients generated by TIDCF which are printed in subroutine TIDCF.

13. Set up print and plot arrays for output variables in the internal numbering system.

14. Initialize conduit conveyance factor in Manning equation. Also, read input data defining the initial conduit flows, velocities, and junction depths at TZERO corresponding to DWF or some antecedent flow condition.

15. Read in initial system information on tape unit N21 generated by the block immediately preceding the EXTRAN Block, usually the RUNOFF Block.

16. Read first two hydrograph records either from tape unit N21 or from data input cards.

17. Write out initial transport system information on tape unit N22 which will contain the hydraulic output from the EXTRAN Block supplied as input to any subsequent block.

SUBROUTINE INFLOW

Subroutine INFLOW is called from Subroutine TRANSX on each time-step to compute the current value of hydrograph inflow to each input node in the sewer system. INFLOW reads current values of hydrograph ordinates from tape unit N21 if the RUNOFF Block (or any other block) immediately precedes the EXTRAN Block, or from card input runoff hydrographs in cases where no other block is used as a pre-processor to EXTRAN. INFLOW performs a linear interpolation between hydrograph input points and computes the discharge at each input node at the half-step time, $t+\Delta t/2$.

SUBROUTINE TIDCF

Subroutine TIDCF is used on a one-time basis by subroutine INDATA to compute seven tide coefficients, A1 through A7, which are used by subroutine BOUND to compute the current tide elevation according to the Fourier series:

$$\begin{aligned} H_{TIDE} = A_1 &+ A_2 \sin \omega T + A_3 \sin 2\omega T \\ &+ A_4 \sin 3\omega T + A_5 \cos \omega T \\ &+ A_6 \cos 2\omega T + A_7 \cos 3\omega T \end{aligned} \tag{37}$$

where

T = current time in seconds

ω = 2π radians/tidal period in seconds. The tidal period is 25 hours = 90,000 sec.

The coefficients A_2 through A_7 are developed by an interactive technique in TIDCF in which a sinusoidal series is fitted to the set of tidal stage-time points supplied as input data by subroutine INDATA.

SUBROUTINE OUTPUT

Subroutine OUTPUT is called by subroutine TRANSX at the end of the simulation run to print and plot the hydraulic output arrays generated by the EXTRAN Block. Printed output includes: 1) the water depths and water surface elevations at each junction, and 2) the discharge and flow velocity in each system conduit. The plotting of junction water surface elevation and conduit discharge is carried out by a printer-plot package labelled CURVE which is called by OUTPUT after printed output is complete.

SUBROUTINES CURVE, PINE, PPLOT, SCALE

The above subroutines form a general printer-plot package which is used in the EXTRAN Block to plot water surface elevation at selected nodes and conduit discharge in selected links. Subroutine CURVE is the executive program driving the other three subroutines of this package. CURVE is called at the conclusion of transport system simulation by OUTPUT. Inclusion of these subroutines in the EXTRAN Block allows EXTRAN to stand on its own as well as function with SWMM.

ENGLISH/METRIC CONVERSION FACTORS

All references in this manual, as well as all inputs to, outputs from, and calculations in the EXTRAN Block, are in English Units. The following conversion factors will allow the user to determine the equivalent Metric unit.

1 foot = 0.3048 meters
1 square foot = 0.0929 square meters
1 cubic foot = 0.0283 cubic meters
1 foot/second = 0.3048 meters/second
1 cubic foot/second = 0.0283 cubic meters/seconds
1 inch = 2.54 centimeters

REFERENCES

1. Shubinski, R. P., and L. A. Roesner. Linked Process Routing Models, paper presented at the Symposium on Models for Urban Hydrology, American Geophysical Union Meeting, Washington, D. C., 1973.

2. Kibler, D. F., J. R. Monser, and L. A. Roesner. San Francisco Stormwater Model, User's Manual and Program Documentation, prepared for the Division of Sanitary Engineering City and County of San Francisco, Water Resources Engineers, Walnut Creek, California, 1975.

3. Armco Water Control Gates, Armco Design Manual, Metal Products Division, Middletown, Ohio.

APPENDIX A

PROGRAM LISTING AND KEY VARIABLE DEFINITION

This Appendix is comprised of three tables. The first, Table A-1, consists of the Data Input Forms for EXTRAN. Each sheet represents one card group of the input data, as outlined in Table 1 of Chapter 2.

The second table, Table A-2, is a definition of the key variables in the EXTRAN Block. They are listed in the alphabetical order of the Common Blocks in which they are contained.

Finally, Table A-3 is a program listing of EXTRAN. The Executive Subroutine EXTRAN, which also doubles as the main program of EXTRAN when it is revised to stand alone from SWMM, is printed first. Subroutine TRANSX, which serves as the main controlling program of the EXTRAN Block, is printed next, followed by all other subprograms in alphabetical order.

TABLE A-1

DATA INPUT FORM

EXTRAN

Card Group 1 of 22: Input and Output Hydrograph Tape Identification
Format: 2I5

N21	N22	

NOTE: Card group 1 is only required if EXTRAN is to be run on its own.

Card Group 2 of 22: Title cards (2 cards)
Format: 20A4

ALPHA

Card Group 3 of 22: Run control card
Format: I5, 2F5.0, 8I5, F5.0

NTCYC	DELT	TZERO	NHPRT	NQPRT	NPLT	LPLT	NSTART	INTER	NJSW	ITMAX	SURTOL	
1 2 3 4 5	6 7 8 9 10	11 12 13 14 15	16 17 18 19 20	21 22 23 24 25	26 27 28 29 30	31 32 33 34 35	36 37 38 39 40	41 42 43 44 45	46 47 48 49 50	51 52 53 54 55	56 57 58 59 60	61 62 63 64 65 66 67 68 69 70 71 72 73 74 75 76 77 78 79 80

Card Group 4 of 22: Junction print control (8 junctions per card)
Format: 8I10

JPRT (1)	JPRT (2)	JPRT (3)	JPRT (4)	JPRT (5)	JPRT (6)	JPRT (7)	JPRT (8)

Card Group 5 of 22: Conduit print control (8 conduits per card)
Format: 8I10

CPRT (1)	CPRT (2)	CPRT (3)	CPRT (4)	CPRT (5)	CPRT (6)	CPRT (7)	CPRT (8)

Card Group 6 of 22: Junction plot control (8 junctions per card)
Format: 8I10

JPLT (1)	JPLT (2)	JPLT (3)	JPLT (4)	JPLT (5)	JPLT (6)	JPLT (7)	JPLT (8)

Card Group 7 of 22: Conduit plot control (8 conduits per card)
Format: 8I10

KPLT (1)	KPLT (2)	KPLT (3)	KPLT (4)	KPLT (5)	KPLT (6)	KPLT (7)	KPLT (8)

Card Group 8 of 22: Conduit cards (1 card per conduit)
Format: 4I5, 9F5.0

NCOND	NJUNC UPSTR	NJUNC DNSTR	NKLASS	AFULL SQ FT	DEEP FT	WIDE FT	LEN FT	ZP UPSTR	ZP DNSTR	ROUGH	STHETA	SPHI	
1 2 3 4 5	6 7 8 9 10	11 12 13 14 15	16 17 18 19 20	21 22 23 24 25	26 27 28 29 30	31 32 33 34 35	36 37 38 39 40	41 42 43 44 45	46 47 48 49 50	51 52 53 54 55	56 57 58 59 60	61 62 63 64 65	66 67 68 69 70 71 72 73 74 75 76 77 78 79 80

NOTE: Last card must be 99999 in columns 1-5

Card Group 9 of 22: Junction cards (1 card per junction)
Format: I5, 3F5.0

JUN	GRELEV	Z	QINST

NOTE: Last card must be 99999 in columns 1-5

Card Group 10 of 22: Storage cards (1 card per junction)
Format: I5, 2F5.0

JSTORE	ZTOP	ASTORE ft^2
1 2 3 4 5	6 7 8 9 10	11 12 13 14 15

NOTE: Last card must be 99999 in columns 1-5

Card Group 11 of 22: Orifice cards (1 card per orifice)
Format: 3I5, 3F5.0

NJUNC$_1$	NJUNC$_2$	NKLASS	AORIF	CORIF	ZP	
1 2 3 4 5	6 7 8 9 10	11 12 13 14 15	16 17 18 19 20	21 22 23 24 25	26 27 28 29 30	31 32 33 34 35 36 37 38 39 40 41 42 43 44 45 46 47 48 49 50 51 52 53 54 55 56 57 58 59 60 61 62 63 64 65 66 67 68 69 70 71 72 73 74 75 76 77 78 79 80

NOTE: Last card must be 99999 in columns 1-5

Card Group 12 of 22: Weir cards (1 card per weir)
Format: 3I5, 4F5.0

$NJUNC_1$	$NJUNC_2$	KWEIR	YCREST	YTOP	WLEN	COEF
1 2 3 4 5	6 7 8 9 10	11 12 13 14 15	16 17 18 19 20	21 22 23 24 25	26 27 28 29 30	31 32 33 34 35

NOTE: Last card must be 99999 in columns 1-5

Card Group 13 of 22: Pump cards (1 card per pump)
Format: 3I5, 7F5.0

$NJUNC_1$	$NJUNC_2$	IPTYP	VWELL	$PRATE_1$	$PRATE_2$	$PRATE_3$	$VRATE_1$	$VRATE_2$	$VRATE_3$	
1 2 3 4 5	6 7 8 9 10	11 12 13 14 15	16 17 18 19 20	21 22 23 24 25	26 27 28 29 30	31 32 33 34 35	36 37 38 39 40	41 42 43 44 45	46 47 48 49 50	51 52 53 54 55 56 57 58 59 60 61 62 63 64 65 66 67 68 69 70 71 72 73 74 75 76 77 78 79 80

NOTE: Last card must be 99999 in columns 1-5

Card Group 14 of 22: Free outfall cards (1 card per outfall)
Format: I5

JFREE

NOTE: Last card must be 99999 in columns 1-5

Card Group 15 of 22: Outfalls with tide gates (1 card per outfall)
Format: I5

JGATE

NOTE: Last card must be 99999 in columns 1-5

Card Group 16 of 22: Tide control card (1 card) Format: 15,8F5.0
Card Group 17 of 22: Tide computation card (1 card) Format: 3I5
Card Gropu 18 of 22: Tide stage card (4 points per card) Format: 8F10.0

NTIDE	A1	A2	A3	A4	A5	A6	A7	W
KO	NI	NCHTID						

TT_1	YY_1	TT_2	YY_2	TT_3	YY_3	TT_4	YY_4

Card Group 19 of 22: Initial flows and velocities (4 conduits per card)
Format: 8F10.0

Q_1	V_1	Q_2	V_2	Q_3	V_3	Q_4	V_4
1 2 3 4 5	6 7 8 9 10	11 12 13 14 15	16 17 18 19 20	21 22 23 24 25	26 27 28 29 30	31 32 33 34 35	36 37 38 39 40
41 42 43 44 45	46 47 48 49 50	51 52 53 54 55	56 57 58 59 60	61 62 63 64 65	66 67 68 69 70	71 72 73 74 75	76 77 78 79 80

NOTE: If initial condition is zero flow throughout entire system, punch 99999. for Q_1.
No other cards required.

Card Group 20 of 22: Initial heads (8 junctions per card)
Format: 8F10.0

Y_1	Y_2	Y_3	Y_4	Y_5	Y_6	Y_7	Y_8

NOTE: If Q(1) is 99999, indicating zero flow, skip Card Group 19.

Card Group 21 of 22: Hydrograph input control cards (16 input nodes per card)
Format: 16I5

JSW(1)	JSW(2)	JSW(3)	JSW(4)	JSW(5)	JSW(6)	JSW(7)	JSW(8)	JSW(9)	JSW(10)	JSW(11)	JSW(12)	JSW(13)	JSW(14)	JSW(15)	JSW(16)
1 2 3 4 5	6 7 8 9 10	11 12 13 14 15	16 17 18 19 20	21 22 23 24 25	26 27 28 29 30	31 32 33 34 35	36 37 38 39 40	41 42 43 44 45	46 47 48 49 50	51 52 53 54 55	56 57 58 59 60	61 62 63 64 65	66 67 68 69 70	71 72 73 74 75	76 77 78 79 80

Card Group 22 of 22: Hydrograph inflow cards (7 flows per card at time TEO)
Format: 8F10.0

TEO	QCARD(1)	QCARD(2)	QCARD(3)	QCARD(4)	QCARD(5)	QCARD(6)	QCARD(7)

NOTE: If more than one card is required to list flows for all input nodes, QCARD(N) for all subsequent cards should begin in columns 1-10, 8 QCARD(N) per card.

TABLE A-2

DEFINITION OF KEY VARIABLES IN EXTRAN

Variable Name	Description	Units
	COMMON/BD/	
	This common is used in the following subroutines BLOCK DATA BOUND DEPTH HYDRAD INDATA TRANSX	
ANORM	Matrix of normalized wet cross-sectional area of of conduit, based on shape and depth	
HRNORM	Matrix of normalizd hydraulic radius of conduit, based on shape and depth	
TWNORM	Matrix of normalized conduit width at flow line, based on shape and depth	
	COMMON/BND/	
	This common is used by the following subroutines BOUND INDATA TRANSX	
JFREE	Node for free outfall	None
JGATE	Node for non-weir tide gate	None
JTIDE	Not used at this time	None
NFREE	Number of free outfalls	None
NGATE	Number of non-weir tide gates	None
NTIDE	Indicator for outfall tide level control 1. No water surface at outfall 2. Outfall control water surface at constant elevation, A1 3. Tide coefficient provided 4. Program will compute tide coefficients	None

TABLE A-2
(Continued)

Variable Name	Description	Units
YT	Depth of water at a node at half integration step	Feet
Z	Elevation of node invert	Feet
ZCROWN	Elevation of uppermost conduit crown at a node, defined as node crown elevation	Feet
	COMMON/LAB/	
	This common is used by the following subroutines BLOCK DATA CURVE INDATA OUTPUT PINE PPLOT	
HORIZ	Horizontal label of curve	None
TITLE	Title printed out on curve	None
VERT	Vertical label	None
XLAB	Numerical scale labels for X	None
YLAB	Numerical scale labels for Y	None
	COMMON/ORF/	
	This common is used by the following subroutines BOUND INDATA	
AORIF	Cross-sectional area of orifice	Square Feet
CORIF	Orifice coefficient	None
LORIF	Internal orifice link number	None
NORIF	Number of orifices	None

TABLE A-2
(Continued)

Variable Name	Description	Units
NTC	Number of nodal links including internal links	None
NTCYC	Number of integration cycles	None
TIME	Time counter for hydrograph input	Seconds
TIME2	TIME - DELT2	Seconds
TZERO	Zero time for the simulation	Hours/Seconds
W	Fundamental frequency of daily tidal cycle	Rad Per Sec
	COMMON/ELEV/	
	This common is used in the following subroutines OUTPUT PINE PPLOT	
IPLT	Plot control integer	None
ZCRN	Plot variable, highest crown elevation at a node	Feet
ZGRND	Plot variable, ground elevation	Feet
ZINVRT	Plot variable, node invert elevation	Feet
	COMMON/FILES	
	This common is used in all subroutines of the EXTRAN Block	
IDATEZ	Date (yr-mo-da) on which the simulation begins	None
LOCNOS	Array containing junction numbers of any outflow point in the system	None
N5	Input unit number	None
NLOCAT	Number of outflow junctions	None
NPOLL	Number of pollutants recorded on the input hydrograph tape N21	None

TABLE A-2
(Continued)

Variable Name	Description	Units
N6	Output unit number	None
N21	Unit number for input hydrograph tape generated by preceding SWMM Block	None
N22	Unit number for output hydrograph tape to be used as input to subsequent SWMM Block	None
QCONV	Factor for converting flows on input hydrograph tape to cfs	Vary
TRIBA	Tributary area drained by the system being simulated	Acres
	COMMON/HYFLOW/	
	This common is used in the following subroutines INDATA INFLOW TRANSX	
ISW	Hydrograph input node number from tape	None
JSW	Hydrograph input node number from cards	None
NIREC	Counter for hydrograph input from tape	None
NSTEPS	Number of input records on input hydrograph file	None
QCARD	Rate of inflow, from cards	cfs
QTAPE	Rate of inflow, from tape	cfs
TE	Time of inflow for card input	Hours/Seconds
TEO	Previous value of TE	Hours/Seconds
TIMEO	TEO	Seconds
TP	TZERO	Seconds
T2	Time of inflow for tape input	Seconds

TABLE A-2
(Continued)

Variable Name	Description	Units
T20	Previous value of T2	Seconds
WATSH	Not used at this time	None
	COMMON/JUNC/	
	This common is used in the following subroutines BOUND HEAD INDATA INFLOW OUTPUT TRANSX	
AS	Surface area of a node	Square Feet
ASFULL	Surface area of a node when it enters surcharge	Square Feet
GRELEV	Ground elevation at a node	Feet
JSKIP	Internal integer control, to skip nodal head computation	None
JUN	External node number	None
NCHAN	Conduits connecting to a node	None
QIN	Flow into a node from an outside source	cfs
QINST	Dry weather flow into a node from an outside source	cfs
QOU	Flow from a node	cfs
SUMAL	Sum of $\partial Q(t)/\partial H_j$, for all pipes at node	Feet
SUMQ	Difference between the average inflow and outflow for a node over a time-step	cfs
SUMQS	Difference between the instantaneous inflow and outflow for a node	cfs
Y	Depth of water at a node at full integration step	Feet

TABLE A-2
(Continued)

Variable Name	Description	Units
YT	Depth of water at a node at half integration step	Feet
Z	Elevation of node invert	Feet
ZCROWN	Elevation of uppermost conduit crown at a node, defined as node crown elevation	Feet
	COMMON/LAB/	
	This common is used by the following subroutines BLOCK DATA CURVE INDATA OUTPUT PINE PPLOT	
HORIZ	Horizontal label of curve	None
TITLE	Title printed out on curve	None
VERT	Vertical label	None
XLAB	Numerical scale labels for X	None
YLAB	Numerical scale labels for Y	None
	COMMON/ORF/	
	This common is used by the following subroutines BOUND INDATA	
AORIF	Cross-sectional area of orifice	Square Feet
CORIF	Orifice coefficient	None
LORIF	Internal orifice link number	None
NORIF	Number of orifices	None

TABLE A-2
(Continued)

Variable Name	Description	Units
	COMMON/OUT/	
	This common is used in the following subroutines INDATA OUTPUT TRANSX	
CRPT	Conduit numbers for detailed printing	None
ICOL	Not used at this time	None
IDUM	Dummy array	None
INTER	Number of integration cycles between print cycles	None
IPRT	Not used at this time	None
JPLT	Node numbers for plotting	None
JPRT	Node numbers for detailed printing	None
KPLT	Conduit numbers for plotting	None
LPLT	Number of conduits for detailed printing	None
LTIME	Counter for printed output	None
NHPRT	Number of nodes for detailed printing	None
NPLT	Number of nodes to be plotted	None
NPRT	Not used at the time	None
NPTOT	Total number of plot data points	None
NQPRT	Number of conduits for detailed printing	None
NSTART	First cycle where saved printing array will begin	None
PRGEL	Print matrix, ground elevation	Feet
PRTH	Print matrix, water surface elevation	Feet

TABLE A-2
(Continued)

Variable Name	Description	Units
PRTQ	Print matrix, flow	cfs
PRTV	Print matrix, velocity	fps
PRTY	Print matrix, water depth at node	Feet
QPLT	Matrix of flow values	cfs
TPLT	Time used for plotting	Hours
YPLT	Matrix of water surface elevations	Feet
	COMMON/PIPE/	
	This common is used by the following subroutines BOUND DEPTH HEAD HYDRAD INDATA OUTPUT TRANSX	
A	Full-step wetted cross section	Square Feet
AFULL	Full cross-sectional area of conduit	Square Feet
AT	Half-step wetted cross section	Square Feet
DEEP	Vertical dimension of conduit	Feet
H	Depth of flow at conduit ends	Feet
LEN	Conduit length	Feet
NCOND	External conduit number	None
NKLASS	Conduit shape classification 1. circular 2. rectangular 3. horseshoe 4. eggshape 5. baskethandle	None

TABLE A-2
(Continued)

Variable Name	Description	Units
NJUNC	External nodes at each end of conduit	None
Q	Flow in conduit at full integration step	cfs
QO	Saved flow values at beginning of each integration step	cfs
QT	Flow in conduit at half integration step	cfs
RFULL	Hydraulic radius of conduit when full	Feet
ROUGH	Manning coefficient	
V	Velocity in conduit at the full integration step	fps
VT	Velocity in conduit at the half integration step	fps
WIDE	Width of conduit	Feet
ZP	Height of conduit invert above node invert	Feet
	COMMON/PUMP/	
	This common is used in the following subroutines BOUND INDATA	
IPTYP	Type of pump 1 = Off-line pump - operates on wet-well volume 2 = In-line pump - operates on head at junction	None
JPFUL	Internal integer switch for full wet-well 0 = full 1 = not full	None
LPUMP	Internal pump linkage	None
NPUMP	Number of pumps	None
PRATE	Pumping rate	cfs
VRATE	Volume for changing pump rates	Cubic Feet

TABLE A-2
(Continued)

Variable Name	Description	Units
VWELL	Starting volume of pump wet-well, also current wet-well volume after pumping starts	Cubic Feet
	COMMON/STATS	
	This common is used in the following subroutine OUTPUT TRANSX	
DEPMAX	Maximum depth reached at a junction	Feet
IDHR	Hour at which maximum depth reached	Hours
IDMIN	Minute at which maximum depth reached	Minutes
IQHR	Hour at which maximum flow reached	Hours
IQMIN	Minute at which maximum flow reached	Minutes
IVHR	Hour at which maximum velocity reached	Hours
IVMIN	Minute at which maximum velocity reached	Minutes
QMAXX	Maximum flow reached in a conduit	cfs
SUMQIN	Total system inflow volume during simulation	Cubic Feet
SURLEN	Period during which junction surcharged	Minutes
VLEFT	Volume left in the system at the end of the simulation	Cubic Feet
VMAXX	Maximum velocity reached in a conduit	Feet/Second
	COMMON/STORE	
	This common is used in the following subroutines INDATA OUTPUT TRANSX	
ASTORE	Storage volume per foot of depth (storage facility surface area)	Square Feet

TABLE A-2
(Continued)

Variable Name	Description	Units
JSTORE	Junction number containing storage facility	None
NSTORE	Number of storage facilities in system	None
ZTOP	Elevation of the top of the storage facility	Feet
	COMMON/SURCHG	
	This common is used in the following routines INDATA TRANSX	
ITMAX	Maximum number of iterations for surcharge computations	None
SURTOL	Fraction of surcharge flow used as tolerance on surcharge iteractions	None
	COMMON/TAPES	
	This common is passed from the SWMM executive program and is only used in subroutine EXTRAN in the EXTRAN Block	
INCNT	Counter for the JIN array	None
IOUTCT	Counter for the JOUT array	None
JIN	Array countaining input hydrograph tape unit numbers for all SWMM Blocks accessed during simulation	None
JOUT	Array containing output hydrograph tape unit numbers for all SWMM Blocks accessed during simulation	None
NSCRAT	Unit number of the scratch file	None
	COMMON/TIDE/	
	This common is used by the following subroutines INDATA TIDCF	
AA	Tidal curve fit coefficients during least square process	None

TABLE A-2
(Continued)

Variable Name	Description	Units
SXX	Matrix used by least square process	None
SXY	Vector used by least square process	None
TT	Clock time of tidal stage	Hours/Seconds
XX	Vector used in least square tide fit	None
YY	Stage of tidal input corresponding to TT	Feet
	COMMON/TRAP/	
	This common is used in the following subroutines DEPTH HEAD HYDRAD INDATA TRANSX	
STHETA	Side slope 1 of a trapezoidal channel	None
SPHI	Side slope 2 of a trapezoidal channel	None
	COMMON/WEIR/	
	This common is used in the following subroutines BOUND INDATA	
COEF	Coefficient of discharge for weir	None
COEFS	Coefficient of discharge for surcharged condition computed internally	None
KWEIR	Type of weir 1. transverse 2. transverse with tide gate 3. sideflow 4. sideflow with tide gate	None
LWEIR	Internal link number for weir	None

TABLE A-2
(Continued)

Variable Name	Description	Units
NWEIR	Number of weirs	None
WLEN	Weir length	Feet
YCREST	Height of weir crest above node invert	Feet
YTOP	Distance of top of weir opening, above invert	Feet

TABLE A-3

PROGRAM LISTING

```
C/////SUBROUTINE EXTRAN
C=====================================================================
C
C        EXTENDED TRANSPORT MODEL UPDATED APRIL, 1981
C                              BY
C                  CAMP DRESSER AND MCKEE INC.
C                       LARRY A. ROESNER
C                     ROBERT P. SHUBINSKI
C                        JOHN A. ALDRICH
C
C=====================================================================
      COMMON/TAPES/INCNT,IOUTCT,JIN(10),JOUT(10),NSCRAT(5)
      COMMON/FILES/N5,N6,N21,N22,NPOLL,NLOCAT,QCONV,IDATEZ
     1,LOCNOS(100),TRIBA
      DIMENSION TITLEZ(40)
      INTEGER IFNAM(3),OFNAM(3),IHFNM(3),INQTM(3)
C
C**** TO CHANGE THIS SECTION FROM THE MAIN PROGRAM OF EXTRAN STANDING
C     ALONE TO SUBROUTINE EXTRAN OF EPA SWMM:
C          1.  REMOVE C///// FROM FIRST LINE (SUBROUTINE EXTRAN)
C          2.  SET ISKIP=0 IN THE NEXT EXECUTABLE LINE BELOW
C          3.  REMOVE C///// FROM RETURN STATEMENT AT END OF SUBROUTINE
C
      ISKIP=1
      IF(ISKIP) 10,10,20
C/////// EPA SWMM I/O CONTROL ////////////
C**** SET UP TRANSFER TAPES
   10 INCT=INCT+1
      IOUTCT=IOUTCT+1
      N21=JIN(INCT)
      N22=JOUT(IOUTCT)
      N5=5
      N6=6
      GO TO 30
C//////////////////////////////////////////////////////////////////////
C
C/////// DEC20 I/O CONTROL////////////
C        EXTRAN STAND ALONE
C
C***** SET UP TRANSFER TAPES
   20 CONTINUE
      N5=20
      N6=21
      WRITE(5,103)
  103 FORMAT(1X,'ENTER INPUT FILE SPECIFICATIONS:',$)
      READ(5,101) IFNAM
  101 FORMAT(3A5)
      WRITE(5,102)
  102 FORMAT(1X,'ENTER OUTPUT FILE SPECIFICATIONS:',$)
      READ(5,101) OFNAM
      OPEN(UNIT=N5,DEVICE='DSK',ACCESS='SEQIN',DIALOG=IFNAM)
      OPEN(UNIT=N6,DEVICE='DSK',ACCESS='SEQOUT',DIALOG=OFNAM)
C
      READ(N5,1000) N21,N22
 1000 FORMAT(2I5)
      IF(N21.LE.0)GO TO 110
```

```
      WRITE(5,109)
  109 FORMAT(1X,'ENTER INPUT HYDROGRAPH FILE SPECIFICATIONS:',$)
      READ(5,101)IHFNM
      OPEN(UNIT=N21,DEVICE='DSK',ACCESS='SEQIN',DIALOG=IHFNM)
      REWIND N21
  110 IF(N22.LE.0)GO TO 30
      WRITE(5,111)
  111 FORMAT(1X,'ENTER FILE SPECS FOR SYSTEM INFORMATION INPUT',
     1' TO RECEIVING WATER MODEL:',$)
      READ(5,101)INQTM
      OPEN(UNIT=N22,DEVICE='DSK',ACCESS='SEQOUT',DIALOG=INQTM)
      REWIND N22
C/////////////////////////////////////////////////////////////////////////
C
C**** READ FIRST TWO LINES OF INPUT HYDROGRAPH FILE AND WRITE TO
C**** RECEIVING WATER MODEL FILE
   30 IF(N21) 50,50,40
   40 READ(N21)(TITLEZ(I),I=1,40)
      READ(N21)IDATEZ,TZERO
   50 IF(N22) 70,70,60
   60 WRITE(N22)(TITLEZ(I),I=1,40)
      WRITE(N22) IDATEZ,TZERO
C
   70 IF(ISKIP.EQ.0)WRITE(N5,100)
  100 FORMAT(/,T2,'ENTRY MADE TO EXTENDED TRANSPORT MODEL',
     1//,T2,'UPDATED BY CAMP DRESSER AND MCKEE INC APR. 1981')
      CALL TRANSX
      IF(ISKIP.EQ.0) WRITE(N6,150)
  150 FORMAT(//,T11,'* * * * * EXTENDED TRANSPORT MODEL SIMULATION',
     1' ENDED * * * * *',//)
C/////RETURN
C
      END
```

```
C
      SUBROUTINE TRANSX
C                 THIS IS SUBROUTINE TRANSX OF THE SEWER MODEL
C                 IT DRIVES ALL OTHER SUBPROGRAMS AND PERFORMS THE
C                 MODIFIED EULER SOLUTION OF THE MOTION
C                 AND CONTINUITY EQUATIONS
C
      COMMON /BD/ANORM(26,5),HRNORM(26,5),TWNORM(26,5)
      COMMON/BND/ NFREE,JFREE(25),NTIDE,JTIDE(25),NGATE,JGATE(25)
C
C
      COMMON/HYFLOW/ ISW(187),QTAPE(187,2),JSW(65),QCARD(65,2),
     1 WATSH(187),TEQ,TP,T2,TE,T20,TIMEQ,NSTEPS,NINREC
      COMMON/FILES/ N5,N6,N21,N22,NPOLL,NLOCAT,QCONV,IDATEZ,LOCNOS(100),
     1TRIBA
      COMMON/CONTR/ NTCYC,DELTQ,DELT,DELT2,TZERO,ALPHA(40),
     1 NJ,NC,NTC,NTL,ICYC,NJSW,MJSW,TIME,TIME2,A1,A2,A3,A4,A5,A6,A7,W
      COMMON/JUNC/Y(187),YT(187),NCHAN(187,8),AS(187),Z(187),QIN(187),
     1 QOU(187),QINST(187),GRELEV(187),JUN(187),ZCROWN(187),JSKIP(187)
     2 ,SUMAL(187),SUMQ(187),SUMQS(187),ASFULL(187)
C
      COMMON/PIPE/LEN(187),NJUNC(187,2),AFULL(187),AT(187),
     1 Q(187),V(187),VT(187),DEEP(187),A(187),WIDE(187),RFULL(187),
     2 NKLASS(187),ZP(187,2),QT(187),QO(187),H(187,2),NCOND(187),
     3 ROUGH(187)
      COMMON/TRAP/STHETA(200),SPHI(200)
C
      COMMON/STORE/ NSTORE,JSTORE(20),ZTOP(20),ASTORE(20)
C
      REAL LEN
C
      COMMON/OUT/ NPRT,IPRT,NHPRT,JPRT(20),PRTH(100,20),PRGEL(20),
     1 NQPRT,CPRT(20),PRTV(100,20),PRTQ(100,20),IDUM(12),ICOL(10),
     2 LTIME,NPLT,JPLT(20),YPLT(102,20),LPLT,KPLT(20),QPLT(102,20),
     3 TPLT(102),NPTOT,NSTART,INTER,PRTY(100,20)
      COMMON/STATS/VMAXX(187),QMAXX(187),DEPMAX(187),IVHR(187),
     2IVMIN(187),IQHR(187),IQMIN(187),IDHR(187),IDMIN(187),SURLEN(187),
     3SUMQIN,VLEFT
      COMMON/SURCHG/SURTOL,ITMAX
      INTEGER CPRT
      DIMENSION ICHECK(187),JCHECK(187),IND(2),QOUT(100)
      DATA IND/1H ,1H*/
C
C
C                                 E X E C U T I O N
C
      COUNT=0.0
      NDIM=187
      DO 5 N=1,NDIM
      ICHECK(N)=IND(1)
      DO 5 M=1,8
    5 NCHAN(N,M)=0
C
C******** INPUT DATA
      CALL INDATA
C
```

```
C******** INITIALIZATION
      ICYC=0
      LTIME=0
      NPTOT=0
      NERROR=0
      TIME=TZERO
      IDATE=IDATEZ
      TIMDAY=TZERO/3600.
      DO 901 N=1,NC
      VMAXX(N)=0.0
      QMAXX(N)=0.0
      IVHR(N)=0
      IVMIN(N)=0
      IQHR(N)=0
      IQMIN(N)=0
  901 CONTINUE
      SUMQIN = 0.
      VLEFT = 0.
      DO 911 J=1,NJ
      SUMQS(J)=0.
      JCHECK(J)=IND(1)
      SURLEN(J)=0.0
      DEPMAX(J)=0.0
      IDHR(J)=0
      IDMIN(J)=0
      QOU(J) = 0.
  911 CONTINUE
C
C ****** INITIALIZATION FOR DRY WEATHER FLOWS
C        IS NOW DONE IN INDATA (BEFORE READING INFLOW HYDROGRAPHS)
C
C
      DO 20 N=1,NTL
      QT(N)=Q(N)
      AT(N)=0.
      IF(N.GT.NTC.OR.QT(N).EQ.0.) GO TO 20
      NL=NJUNC(N,1)
      NH=NJUNC(N,2)
      HNL=Y(NL)+Z(NL)
      HNH=Y(NH)+Z(NH)
```

```
00097          CALL HEAD(N,NL,NH,HNL,HNH,QT(N),AT(N),VT(N),HRAD,ANL,ANH,RNL,TZERO
00098         .,1)
00099       20 CONTINUE
00100          DO 30 J=1,NJ
00101          YT(J)=Y(J)
00102       30 CONTINUE
00103    C
00104    C******** MAJOR PROGRAM LOOP THROUGH TIME
00105          MP=(NTCYC+99)/100
00106          DO 760 MCY=1,NTCYC,MP
00107          NPTOT=NPTOT+1
00108          DO 640 MCYY=1,MP
00109          TIME=TIME+DELT
00110          TIME2=TIME-DELT2
00111          TIMDAY=TIMDAY+DELT/3600.
00112          IF(TIMDAY-24.) 34,32,32
00113       32 TIMDAY=TIMDAY-24.
00114          IDATE=IDATE+1
00115       34 ICYC=ICYC+1
00116          ERROR=0.
00117          IT=0
00118          TOL=1.
00119          NSUR=1
00120    C
00121    C******** SELECT INPUT HYDROGRAPHS
00122          CALL INFLOW
00123    C
00124    C******** STORE OLD FLOW VALUES
00125          DO 60 N=1,NTL
00126       60 QO(N)=Q(N)
00127    C
00128    C******** INITIALIZE CONTINUITY PARAMETERS
00129          DO 80 J=1,NJ
00130          AS(J)=0.
00131          SUMQ(J)=QIN(J)
00132          SUMQS(J)=QIN(J)
00133       80 SUMAL(J)=0.
00134    C
00135    C******** FULL-STEP AREA, RADIUS : VELOCITY
00136    C******** HALF-STEP FLOW
00137       90 DO 120 N=1,NTC
00138          NL=NJUNC(N,1)
00139          NH=NJUNC(N,2)
00140          H(N,1)=Y(NL)+Z(NL)
00141          H(N,2)=Y(NH)+Z(NH)
00142          CALL HEAD(N,NL,NH,H(N,1),H(N,2),Q(N),A(N),V(N),HRAD,ANH,ANL,RNL,
00143         1TIME,ICYC)
00144          DELQ4=+DELT2*V(N)**2*(ANH-ANL)/LEN(N)
00145          DELQ3=2.*V(N)*(A(N)-AT(N))
00146          DELQ2=-(DELT2*32.2*(H(N,2)-H(N,1))/LEN(N))*A(N)
00147          QNEW=QO(N)+DELQ2+DELQ3+DELQ4
00148          AKON=-DELT2*(ROUGH(N)/HRAD**1.33333)*ABS(V(N))
00149          DELQ1=AKON*QNEW/(1.-AKON)
00150          QT(N)=QNEW+DELQ1
```

```
C******** CHECK FOR NORMAL FLOW
      IF(H(N,1) .GT. ZCROWN(NL)) GO TO 101
      DELH=H(N,1)-H(N,2)
      DELZP=ZP(N,1)-ZP(N,2)
      IF(QT(N).LE.0.) GO TO 101
      IF(DELH-DELZP) 100,101,101
  100 QNORM=SQRT(32.2*(ZP(N,1)-ZP(N,2))/(LEN(N)*ROUGH(N)))
     1 *ANL*RNL**0.6667
      IF(QNORM.GT.QT(N)) GO TO 101
      QT(N)=QNORM
C******** COMPUTE CONTINUITY PARAMETERS
  101 DQDH=1./(1.-AKON)*32.2*DELT2*A(N)/LEN(N)
      SUMQ(NL)=SUMQ(NL)-0.5*(QT(N)+QO(N))
      SUMQS(NL)=SUMQS(NL)-QT(N)
      SUMAL(NL)=SUMAL(NL)+DQDH
      SUMQ(NH)=SUMQ(NH)+0.5*(QT(N)+QO(N))
      SUMQS(NH)=SUMQS(NH)+QT(N)
      SUMAL(NH)=SUMAL(NH)+DQDH
  120 CONTINUE
C
C******** SET HALF STEP OUTFLOWS AND INTERNAL TRANSFERS
      CALL BOUND(Y,YT,QT,TIME2,DELT2,IT)
      N1=NTC+1
      DO 130 N=N1,NTL
      NL=NJUNC(N,1)
      SUMQ(NL)=SUMQ(NL)-0.5*(QT(N)+QO(N))
      SUMQS(NL)=SUMQS(NL)-QT(N)
      NH=NJUNC(N,2)
      IF(NH.EQ.0)GO TO 130
      SUMQ(NH)=SUMQ(NH)+0.5*(QT(N)+QO(N))
      SUMQS(NH)=SUMQS(NH)+QT(N)
  130 CONTINUE
C
C******** HALF-STEP HEAD
      DO 320 J=1,NJ
      IF(JSKIP(J)) 140,140,300
  140 IF(AS(J).GT.0.0 .OR. Y(J).GE.(ZCROWN(J)-Z(J))) GO TO 135
      IF(NERROR.LE.10) WRITE(N6,2400) ICYC,JUN(J)
 2400 FORMAT(' ***** WARNING ***** ICYC=',I5,'  ZERO SURFACE AREA COMPUT
     .ED AT JUNCTION',I6,'  CHECK INPUT DATA FOR HIGH PIPE ')
      NERROR=NERROR+1
      YT(J)=0.0
      GO TO 300
  135 CONTINUE
      YCROWN=0.96*(ZCROWN(J)-Z(J))
      IF(Y(J)-YCROWN) 240,240,260
C
C******** COMPUTE YT FOR FREE SURFACE JUNCTIONS
  240 YT(J)=Y(J)+SUMQ(J)*DELT2/AS(J)
      IF(YT(J).LT.0.) YT(J)=0.
C****** WHEN JUNCTION SURCHARGES, 'ASFULL' WILL BE THE LAST
C        VALUE OF 'AS' UNDER FREE SURFACE FLOW
      ASFULL(J) = AS(J)
      GO TO 300
C
C******** ADJUST HEAD AT SURCHARGED JUNCTIONS
```

```
C........APPLY 1/2 OF COMPUTED CORRECTION
  260 DENOM=SUMAL(J)
      IF(Y(J).LT.1.25*YCROWN) DENOM=SUMAL(J)+(ASFULL(J)/DELT2-SUMAL(J))
     .       *EXP(-15.*(Y(J)-YCROWN)/YCROWN)
      CORR=0.50
C**** DECREASE THE HEAD CORRECTION FACTOR FOR UPSTREAM TERMINAL JUNCTIONS
      IF(NCHAN(J,2).EQ.0) CORR=0.30
      YT(J)=Y(J)+CORR*SUMQS(J)/DENOM
      IF((YT(J)+Z(J)).GT.GRELEV(J)) YT(J)=GRELEV(J)-Z(J)
      IF(YT(J).LT.YCROWN) YT(J)=YCROWN-0.001
C**** COMPUTE THE CONVERGENCE CRITERIA FOR FLOW ERRORS IN SURCHARGED AREAS
      QAVE=0.
      DO 280 K=1,8
      IF(NCHAN(J,K)) 290,290,280
  280 QAVE=QAVE+ABS(Q(NCHAN(J,K)))
  290 K=K-1
      QAVE=SURTOL*QAVE/K
      TOL=(TOL*(NSUR-1)+QAVE)/NSUR
      NSUR=NSUR+1
C
C******** INITIALIZE FOR FULL STEP FLOWS
  300 AS(J)=0.
      SUMQ(J)=QIN(J)
      SUMQS(J)=QIN(J)
      SUMAL(J)=0.
  320 CONTINUE
C
C******** HALF-STEP AREA, RADIUS & VELOCITY
C******** FULL-STEP FLOW
  330 ERROR=0.
      DO 360 N=1,NTC
      NL=NJUNC(N,1)
      NH=NJUNC(N,2)
C**** CHECK WHETHER SURCHARGE ITERATIONS OCCURRING
      IF(IT) 335,335,333
  333 IF(JCHECK(NH).EQ.IND(2)) GO TO 335
      IF(JCHECK(NL).NE.IND(2)) GO TO 360
  335 H(N,1)=YT(NL)+Z(NL)
      H(N,2)=YT(NH)+Z(NH)
      CALL HEAD(N,NL,NH,H(N,1),H(N,2),QT(N),AT(N),VT(N),HRAD,ANH,ANL,
     1RNL,TIME,ICYC)

      DELQ4=+DELT*VT(N)**2*(ANH-ANL)/LEN(N)
      DELQ3=4.*VT(N)*(AT(N)-A(N))
      DELQ2=-(DELT*32.2*(H(N,2)-H(N,1))/LEN(N))*AT(N)
      QNEW=QO(N)+DELQ2+DELQ3+DELQ4
      AKON=-DELT*(ROUGH(N)/HRAD**1.33333)*ABS(VT(N))
      DELQ1=AKON*QNEW/(1.-AKON)
      Q(N)=QNEW+DELQ1
C******** DO NOT ALLOW A FLOW REVERSAL IN ONE TIME STEP
      DIRQT=SIGN(1.,QT(N))
      DIRQ=SIGN(1.,Q(N))
      IF(DIRQT/DIRQ.LT.0.) Q(N)=0.001*DIRQ
C******** CHECK FOR NORMAL FLOW
      ICHECK(N)=IND(1)
      IF(H(N,1) .GT. ZCROWN(NL)) GO TO 341
```

```
00262          DELH=H(N,1)-H(N,2)
00263          DELZP=ZP(N,1)-ZP(N,2)
00264          IF(Q(N).LE.0.) GO TO 341
00265          IF(DELH-DELZP) 340,341,341
00266      340 QNORM=SQRT(32.2*(ZP(N,1)-ZP(N,2))/(LEN(N)*ROUGH(N)))
00267         1 *ANL*RNL**0.6667
00268          IF(QNORM.GT.Q(N)) GO TO 341
00269          ICHECK(N)=IND(2)
00270          Q(N)=QNORM
00271    C******** COMPUTE CONTINUITY PARAMETERS
00272      341 DQDH=1./(1.-AKON)*32.2*DELT*AT(N)/LEN(N)
00273          SUMQ(NL)=SUMQ(NL)-0.5*(Q(N)+QO(N))
00274          SUMQS(NL)=SUMQS(NL)-Q(N)
00275          SUMAL(NL)=SUMAL(NL)+DQDH
00276          SUMQ(NH)=SUMQ(NH)+0.5*(Q(N)+QO(N))
00277          SUMQS(NH)=SUMQS(NH)+Q(N)
00278          SUMAL(NH)=SUMAL(NH)+DQDH
00279      360 CONTINUE
00280    C
00281    C******** SET FULL STEP OUTFLOWS AND INTERNAL TRANSFERS
00282          CALL BOUND(YT,Y,Q,TIME,DELT,IT)
00283          N1=NTC+1
00284          DO 370 N=N1,NTL
00285    C******** DO NOT ALLOW FLOW REVERSAL IN ONE TIME STEP
00286          DIRQT=SIGN(1.,QT(N))
00287          DIRQ=SIGN(1.,Q(N))
00288          IF(DIRQT/DIRQ .LT. 0.) Q(N)=0.001*DIRQ
00289          NL=NJUNC(N,1)
00290          SUMQ(NL)=SUMQ(NL)-0.5*(Q(N)+QO(N))
00291          SUMQS(NL)=SUMQS(NL)-Q(N)
00292          NH=NJUNC(N,2)
00293          IF(NH.EQ.0)GO TO 370
00294          SUMQ(NH)=SUMQ(NH)+0.5*(Q(N)+QO(N))
00295          SUMQS(NH)=SUMQS(NH)+Q(N)
00296      370 CONTINUE
00297    C
00298    C******** FULL-STEP HEAD
00299          DO 560 J=1,NJ
00300          IF(JSKIP(J)) 380,380,560
00301      380 IF(AS(J).GT.0.0 .OR. YT(J).GE.(ZCROWN(J)-Z(J))) GO TO 375
00302          IF(NERROR.LE.10) WRITE(N6,2400) ICYC,JUN(J)
00303          NERROR=NERROR+1
00304          Y(J)=0.0
00305          GO TO 560
00306      375 CONTINUE
00307          YCROWN=0.96*(ZCROWN(J)-Z(J))
00308          IF(YT(J)-YCROWN) 480,480,500
00309    C
00310    C**** CHECK WHETHER SURCHARGE ITERATIONS OCCURRING
00311      480 IF(IT) 490,490,560
00312    C
00313    C******** COMPUTE Y FOR FREE SURFACE JUNCTIONS
00314      490 Y(J)=Y(J)+SUMQ(J)*DELT/AS(J)
00315          JCHECK(J)=IND(1)
00316          IF(Y(J).LT.0.) Y(J)=0.
00317    C******** AT INCIPIENT SURCHARGE, 'AS(J)' WILL BE THE ACTUAL
```

```
C          VALUE OF 'ASFULL'
      ASFULL(J) = AS(J)
      GO TO 560
C
C******** ADJUST HEAD AT SURCHARGED JUNCTIONS
C........APPLY 1/2 OF COMPUTED CORRECTION
  500 DENOM=SUMAL(J)
      IF(YT(J).LT.1.25*YCROWN) DENOM=SUMAL(J)+(ASFULL(J)/DELT-SUMAL(J))
     .       *EXP(-15.*(YT(J)-YCROWN)/YCROWN)
      CORR=1.00
C**** DECREASE THE HEAD CORRECTION FACTOR FOR UPSTREAM TERMINAL JUNCTIONS
      IF(NCHAN(J,2).EQ.0) CORR=0.60
      Y(J)=YT(J)+CORR*SUMQS(J)/DENOM
      IF((Y(J)+Z(J)).GT.GRELEV(J)) Y(J)=GRELEV(J)-Z(J)
      IF(Y(J).LT.YCROWN) Y(J)=YCROWN-0.001
      JCHECK(J)=IND(2)
C**** COMPUTE SURCHARGE FLOW ERROR IN JUNCTIONS NOT FLOODED
      IF((Y(J)+Z(J)).LT.GRELEV(J)) ERROR=ERROR+SUMQS(J)
  560 CONTINUE
C**** CHECK CONVERGENCE OF THE FLOW ERROR IN SURCHARGED AREAS
      IF(ABS(ERROR)-TOL) 565,565,561
  561 IT=IT+1
      IF(IT-30)562,562,564
C**** INITIALIZE FOR NEXT ITERATION
  562 DO 563 J=1,NJ
      IF(JCHECK(J).EQ.IND(1)) GO TO 563
      YT(J)=Y(J)
      SUMQ(J)=QIN(J)
      SUMQS(J)=QIN(J)
      SUMAL(J)=0.
  563 CONTINUE
      GO TO 330
  564 IT=IT-1
C
C******** COMPUTE CONTINUITY PARAMETERS
C
  565 DO 950 J=1,NJ
      SUMQIN = SUMQIN + QIN(J)*DELT
      IF(Y(J).EQ.GRELEV(J)-Z(J)) QOU(J)=QOU(J)+SUMQS(J)*DELT
  950 CONTINUE
      NL = NTC + 1
C******** SYSTEM OUTFLOWS
      I=0
      DO 960 N=NL,NTL
      J=NJUNC(N,1)
      IF(NJUNC(N,2).NE.0) GO TO 960
      QOU(J)=QOU(J)+Q(N)*DELT
      I=I+1
      QOUT(I)=Q(N)
  960 CONTINUE
C
C******** WRITE HYDRAULIC DATA FOR INPUT TO QUALITY TRANSPORT MODEL
      DUM=0.
      NHOUR=TIME/3600.
      IF(N22.GT.0) WRITE(N22) NHOUR,IDATE,TIMDAY,
     .                        (QOUT(N),DUM,N=1,NLOCAT)
```

```
C
C********  CHECK FOR MAXIMUM FLOW AND VELOCITY IN CONDUITS
      TMIN=(TIME-NHOUR*3600.)/60.
      DO 902 N=1,NC
      IF(Q(N).GT.QMAXX(N)) GO TO 903
      GO TO 904
  903 QMAXX(N)=Q(N)
      IQHR(N)=NHOUR
      IQMIN(N)=TMIN+0.5
  904 IF(V(N).GT.VMAXX(N)) GO TO 905

      GO TO 902
  905 VMAXX(N)=V(N)
      IVHR(N)=NHOUR
      IVMIN(N)=TMIN+0.5
  902 CONTINUE
C
C********  CHECK FOR SURCHARGE AND MAXIMUM DEPTH AT JUNCTIONS
      DO 906 J=1,NJ
      IF((Z(J)+Y(J)).GT.ZCROWN(J)) SURLEN(J)=SURLEN(J)+DELT/60.0
      IF(Y(J).GT.DEPMAX(J)) GO TO 907
      GO TO 906

  907 DEPMAX(J)=Y(J)
      IDHR(J)=NHOUR
      IDMIN(J)=TMIN+0.5
  906 CONTINUE
C
C******** CHECK PRINTOUT REQUIREMENTS
C.... INTERMEDIATE PRINTOUT
      IF(MOD(ICYC,INTER).NE.0) GO TO 570
      WRITE(N6,1504)
      IF(IT) 566,566,568
  566 WRITE(N6,1499) ICYC,NHOUR,TMIN
 1499 FORMAT(1X,'CYCLE ',I5,6X,'TIME ',I4,' HRS - ',F5.2,
     *' MIN',//)
      GO TO 569
  568 WRITE(N6,1500)ICYC,NHOUR,TMIN,ERROR,IT
 1500 FORMAT(1X,'CYCLE ',I5,6X,'TIME ',I4,' HRS - ',F5.2,
     *' MIN  FLOW DIFFERENTIAL IN SURCHARGED AREA=',F6.2,
     *'CFS  ITERATIONS REQUIRED=',I2,//)
  569 WRITE(N6,1501)
 1501 FORMAT(1X,'JUNCTIONS / DEPTHS ',/)
      WRITE(N6,1502)((JUN(J),Y(J),JCHECK(J)),J=1,NJ)
 1502 FORMAT(2X,I5,'/',F7.2,A1,7(2X,I5,'/',F7.2,A1)/)
      WRITE(N6,1503)
 1503 FORMAT(/,1X,'CONDUITS / FLOWS ',/)
      WRITE(N6,1502)((NCOND(N),Q(N),ICHECK(N)),N=1,NTL)
 1504 FORMAT(/,64(2H- ),//)
  570 CONTINUE
      IF(ICYC-NSTART) 640,580,580
  580 NSTART=NSTART+INTER
      LTIME=LTIME+1
C******** STORE HGL FOR PRINTOUT
      DO 600 I=1,NHPRT
      J=JPRT(I)
```

```
      YMAX=ZCROWN(J)-Z(J)
      PRTY(LTIME,I)=AMIN1(Y(J),YMAX)
  600 PRTH(LTIME,I)=Y(J)+Z(J)
C******** STORE FLOW * VELOCITY FOR PRINTOUT
      DO 620 I=1,NQPRT
      L=CPRT(I)
      NL=NJUNC(L,1)
      NH=NJUNC(L,2)
      PRTQ(LTIME,I)=Q(L)
  620 PRTV(LTIME,I)=V(L)
  640 CONTINUE

C
C******** STORE HGL * FLOW FOR PRINTER PLOT ROUTINE

      TPLT(NPTOT)=TIME/3600.
      IF(NPLT) 700,700,660
  660 DO 680 N=1,NPLT
      J=JPLT(N)
  680 YPLT(NPTOT,N)=Y(J)+Z(J)
  700 IF(LPLT) 760,760,720
  720 DO 740 N=1,LPLT
      L=KPLT(N)
  740 QPLT(NPTOT,N)=Q(L)
  760 CONTINUE
C******** COMPUTE WATER VOLUME LEFT IN STORAGE
      IF(NSTORE.EQ.0) GO TO 801
      DO 800 I=1,NSTORE
      J=JSTORE(I)
  800 VLEFT=VLEFT+Y(J)*ASTORE(J)
  801 CONTINUE
      DO 810 N=1,NC
      NL = NJUNC(N,1)
      NH = NJUNC(N,2)
C**** VOLUME REMAINING IN CONDUIT WITH TIDE GATE NOT INCLUDED IN VLEFT
      IF(NGATE) 807,807,803
  803 DO 805 I=1,NGATE
      IF(JGATE(I).EQ.NH.OR.JGATE(I).EQ.NL) GO TO 810
  805 CONTINUE
  807 H1 = Y(NL) + Z(NL)
      H2 = Y(NH) + Z(NH)
      CALL HEAD(N,NL,NH,H1,H2,Q(N),A(N),V(N),HRAD,ANH,ANL,
     *RNL,TIME,ICYC)
      VLEFT = VLEFT + 0.5*(ANH + ANL)*LEN(N)
  810 CONTINUE
C
C******** PRINT * PLOT OUTPUT
      CALL OUTPUT
      STOP

      END
```

```
00001          BLOCK DATA
00002    C
00003          COMMON /BD/ANORM(26,5),HRNORM(26,5),TWNORM(26,5)
00004          COMMON/LAB/ TITLE(40),XLAB(11),YLAB(6),HORIZ(5),VERT(6)
00005    C
00006    C******** NORMALIZED CROSS-SECTIONAL AREA
00007          DATA ANORM/
00008        1 .0000,.0134,.0374,.0680,.1033,.1423,.1845,.2292,.2759,.3242,
00009        2 .3736,.4237,.4745,.5255,.5763,.6264,.6758,.7241,.7708,.8154,
00010        3 .8576,.8967,.9320,.9626,.9866,1.000,
00011        4 .0000,.0400,.0800,.1200,.1600,.2000,.2400,.2800,.3200,.3600,
00012        5 .4000,.4400,.4800,.5200,.5600,.6000,.6400,.6800,.7200,.7600,
00013        6 .8000,.8400,.8800,.9200,.9600,1.000,
00014        7 .0000,.0181,.0508,.0908,.1326,.1757,.2201,.2655,.3118,.3587,
00015        8 .4064,.4542,.5023,.5506,.5987,.6462,.6931,.7387,.7829,.8253,
00016        9 .8652,.9022,.9356,.9645,.9873,1.000,
00017        1 .0000,.0150,.0400,.0550,.0850,.1200,.1555,.1900,.2250,.2750,
00018        2 .3200,.3700,.4200,.4700,.5150,.5700,.6200,.6800,.7300,.7800,
00019        3 .8350,.8850,.9250,.9550,.9800,1.000,
00020        4 .0000,.0173,.0457,.0828,.1271,.1765,.2270,.2775,.3280,.3780,
00021        5 .4270,.4765,.5260,.5740,.6220,.6690,.7160,.7610,.8030,.8390,
00022        6 .8770,.9110,.9410,.9680,.9880,1.000/
00023    C
00024    C******** NORMALIZED HYDRAULIC RADIUS
00025    C******** SECOND SHAPE IS RECTANGULAR - BUT DO NOT USE - CANNOT NORMALIZ
00026    C          A GENERAL RECTANGULAR HYDRAULIC RADIUS
00027          DATA HRNORM/
00028        1 .0100,.1048,.2052,.3016,.3944,.4824,.5664,.6456,.7204,.7912,
00029        2 .8568,.9176,.9736,1.024,1.070,1.110,1.144,1.174,1.194,1.210,
00030        3 1.217,1.215,1.203,1.178,1.132,1.000,
00031        4 .0000,.0400,.0800,.1200,.1600,.2000,.2400,.2800,.3200,.3600,
00032        5 .4000,.4400,.4800,.5200,.5600,.6000,.6400,.6800,.7200,.7600,
00033        6 .8000,.8400,.8800,.9200,.9600,1.000,
00034        7 .0100,.1040,.2065,.3243,.4322,.5284,.6147,.6927,.7636,.8268,
00035        8 .8873,.9417,.9905,1.036,1.077,1.113,1.143,1.169,1.189,1.202,
00036        9 1.208,1.206,1.195,1.170,1.126,1.000,
00037        1 .0100,.0970,.2160,.3020,.3860,.4650,.5360,.6110,.6760,.7350,
00038        2 .7910,.8540,.9040,.9410,1.008,1.045,1.076,1.115,1.146,1.162,
00039        3 1.186,1.193,1.186,1.162,1.107,1.000,
00040        4 .0100,.0952,.1890,.2730,.3690,.4630,.5600,.6530,.7430,.8220,
00041        5 .8830,.9490,.9990,1.055,1.095,1.141,1.161,1.188,1.206,1.206,
00042        6 1.206,1.205,1.196,1.168,1.127,1.000/
00043    C
00044    C******** NORMALIZED SURFACE WIDTH
00045          DATA TWNORM/
00046        1 .3919,.3919,.5426,.6499,.7332,.8000,.8542,.8980,.9330,.9600,
00047        2 .9798,.9928,.9992,.9992,.9928,.9798,.9600,.9330,.8980,.8542,
00048        3 .8000,.7332,.6499,.5426,.3919,.3919,
00049        4 1.000,1.000,1.000,1.000,1.000,1.000,1.000,1.000,1.000,1.000,
00050        5 1.000,1.000,1.000,1.000,1.000,1.000,1.000,1.000,1.000,1.000,
00051        6 1.000,1.000,1.000,1.000,1.000,1.000,
00052        7 .5878,.5878,.8772,.8900,.9028,.9156,.9284,.9412,.9540,.9668,
00053        8 .9798,.9928,.9992,.9992,.9928,.9798,.9600,.9330,.8980,.8542,
00054        9 .8000,.7332,.6499,.5426,.3919,.3919,
00055        1 .2980,.2980,.4330,.5080,.5820,.6420,.6960,.7460,.7910,.8360,
00056        2 .8660,.8960,.9260,.9560,.9700,.9850,1.000,.9850,.9700,.9400,
```

```
     3 .8960,.8360,.7640,.6420,.3100,.3100,
     4 .4900,.4900,.6670,.8200,.9300,1.000,1.000,1.000,.9970,.9940,
     5 .9880,.9820,.9670,.9480,.9280,.9040,.8740,.8420,.7980,.7500,
     6 .6970,.6370,.5670,.4670,.3420,.3420/
C
      DATA  VERT          /4HJUNC,4HTION,4HWATR,4H SUR,4HELEV,4H(FT)/
C
      END
```

```
      SUBROUTINE BOUND(YDEP,YDEPT,QP,T,DT,IT)
C
C                    THIS SUBROUTINE COMPUTES THE LINK FLOW 'QP(LINK)' FOR
C                    EACH EXTERNAL * INTERNAL NODE TO NODE TRANSFER
C
      COMMON /BD/ANORM(26,5),HRNORM(26,5),TWNORM(26,5)
      COMMON/TRAP/STHETA(200),SPHI(200)
      COMMON/FILES/ N5,N6,N21,N22,NFOLL,NLOCAT,QCONV,IDATEZ,LOCNOS(100),
     1TRIBA
      COMMON/CONTR/ NTCYC,DELTQ,DELT,DELT2,TZERO,ALPHA(40),
     1 NJ,NC,NTC,NTL,ICYC,NJSW,MJSW,TIME,TIME2,A1,A2,A3,A4,A5,A6,A7,W
C
      COMMON/JUNC/Y(187),YT(187),NCHAN(187,8),AS(187),Z(187),QIN(187),
     1 QOU(187),QINST(187),GRELEV(187),JUN(187),ZCROWN(187),JSKIP(187)
     2 ,SUMAL(187),SUMQ(187),SUMQS(187),ASFULL(187)
C
      COMMON/PIPE/LEN(187),NJUNC(187,2),AFULL(187),AT(187),
     1 Q(187),V(187),VT(187),DEEP(187),A(187),WIDE(187),RFULL(187),
     2 NKLASS(187),ZP(187,2),QT(187),QD(187),H(187,2),NCOND(187),
     3 ROUGH(187)
      REAL LEN
C
      DIMENSION YDEP(187),YDEPT(187),QP(187)
C
      COMMON/STORE/ NSTORE,JSTORE(20),ZTOP(20),ASTORE(20)
      COMMON/ORF/ NORIF,LORIF(60),AORIF(60),CORIF(60)
      COMMON/WEIR/ NWEIR,LWEIR(60),KWEIR(60),YTOP(60),YCREST(60),
     2 WLEN(60),COEF(60),COEFS(60)
      COMMON/PUMP/ NPUMP,LPUMP(20),PRATE(20,3),VRATE(20,3),VWELL(20),
     1 JPFUL(20),IPTYP(20)
      COMMON/BND/ NFREE,JFREE(25),NTIDE,JTIDE(25),NGATE,JGATE(25)
C
C                                E X E C U T I O N
C
C**** CHECK WHETHER SURCHARGE ITERATIONS OCCURRING
      IF(IT)105,105,200
  105 HTIDE=-9999.
C
C
C******** COMPUTE NEW ELEVATION OF TIDE
      GO TO (110,109,108,108), NTIDE
  108 HTIDE=A1+A2*SIN(W*T)+A3*SIN(2.*W*T)+A4*SIN(3.*W*T)
     1         +A5*COS(W*T)+A6*COS(2.*W*T)+A7*COS(3.*W*T)
      IF(MOD(ICYC,30).EQ.0) WRITE(N6,1234) ICYC,HTIDE
 1234 FORMAT(' CYCLE',I5,'  HTIDE=',F10.2)
      GO TO 110
  109 HTIDE=A1
  110 CONTINUE
C
C******** ASSIGN SURFACE AREA TO STORAGE JUNCTIONS
C
      IF (NSTORE) 116,116,112
  112 DO 114 I=1,NSTORE
      J = JSTORE(I)
      AS(J) = AS(J) + ASTORE(I)
  114 CONTINUE
```

```
  116 CONTINUE
C
C******** COMPUTE HEAD AT JUNCTIONS WITH SUMP ORIFICES WHERE
C          DEPTH IS BELOW JUNCTION INVERT
      IF(NORIF)200,200,120
  120 DO 180  I=1,NORIF
      LINK=LORIF(I)
      J1=NJUNC(LINK,1)
      JSKIP(J1)=0
      IF(NKLASS(LINK) .EQ. 7 .OR. YDEP(J1) .GT. 0.) GO TO 180
      JSKIP(J1)=1
      YNL=0.96*DEEP(LINK)+YDEP(J1)
      CALL HYDRAD(LINK,NKLASS(LINK),YNL,RNL,ANL,BNL)
      YDEPT(J1)=Y(J1)+SUMQ(J1)*DT/(BNL*LEN(LINK)/2.)
      IF(YDEPT(J1).GT.0.) YDEPT(J1)=0.001
  180 CONTINUE
C
C******** COMPUTE DISCHARGE OVER TRANSVERSE AND SIDEFLOW WEIRS
  200 IF(NWEIR) 580,580,220
  220 DO 560 I=1,NWEIR
C**** INITIALIZE
      WK=COEF(I)
      POWER=1.5
      V2=0.0
      LINK=LWEIR(I)
      DIR=+1.
      J1=NJUNC(LINK,1)
      J2=NJUNC(LINK,2)
      Y1=YDEP(J1)
      IF(J2) 240,240,260
  240 Y2=AMAX1((HTIDE-Z(J1)),YCREST(I))
      HEADW=Y1-YCREST(I)
      IF(HEADW) 480,480,320
  260 Y2=YDEP(J2)
      HEADW=AMAX1(Y1,Y2)-YCREST(I)
      IF(HEADW) 480,480,280
C**** CHECK FOR BACKFLOW
  280 IF(Y1-Y2) 300,320,320
  300 DIR=-1.
      Y1=Y2
      Y2=YDEP(J1)
      J1=J2
      J2=NJUNC(LINK,1)
C**** CHECK WHETHER SURCHARGE ITERATIONS OCCURRING
      IF(IT)320,320,310
  310 IF(Y1.GT.0.96*(ZCROWN(J1)-Z(J1))) GO TO 320
      IF(Y2.LT.0.96*(ZCROWN(J2)-Z(J2))) GO TO 560
C**** CHECK FOR SURCHARGE
  320 IF(Y1.GT.YTOP(I)) GO TO 440
      IF(DIR) 380,340,340
  340 IF(KWEIR(I)-3) 380,360,360
C**** WK IS A FUNCTION OF APPROACH VELOCITY FOR SIDEFLOW WEIRS
  360 WK=COEF(I)
      V2=0.0
      POWER=1.67
C**** WEIR DISCHARGE
```

```
  380 QWEIR=WK*WLEN(I)*((HEADW+V2/64.4)**POWER-(V2/64.4)**POWER)
      KW=KWEIR(I)
      GO TO (420,400,420,400) KW
C**** APPLY ARMCO TIDE GATE CORRECTION
C**** (ARMCO WATER CONTROL GATES CATALOG)
  400 IF(HTIDE.GE.(YDEP(J1)+Z(J1))) GO TO 480
      VEL1=COEF(I)*HEADW**(POWER-1.)
      HLOSS=(4./32.2)*VEL1**2*EXP(-1.15*VEL1/SQRT(YTOP(I)-YCREST(I)))
      HEADW=HEADW-HLOSS
      IF(HEADW.LE.0) GO TO 480
      IF((YCREST(I)+Z(J)+HEADW).LE.HTIDE) GO TO 480
      QWEIR=COEF(I)*WLEN(I)*HEADW**POWER
C
C********* SUBMERGED WEIR COMPUTATIONS, DFK, 8/74
C
  420 RATIO=(Y2-YCREST(I))/(Y1-YCREST(I))
      IF((Y2-YCREST(I)).LE.0) GO TO 500
      IF(RATIO.LE.0.3) GO TO 421
      IF(RATIO.LE.0.75) GO TO 422
      IF(RATIO.LE.0.85) GO TO 423
      IF(RATIO.LE.0.95) GO TO 424
      CONST=0.4-0.3*(RATIO-0.95)/0.05
      GO TO 430
  421 CONST=1.
      GO TO 430
  422 CONST=1.0-0.1*(RATIO-0.3)/0.45
      GO TO 430
  423 CONST=0.9-0.1*(RATIO-0.75)/0.1
      GO TO 430
  424 CONST=0.8-0.4*(RATIO-0.85)/0.1
  430 QWEIR=CONST*COEF(I)*WLEN(I)*(Y1-YCREST(I))**1.5
      GO TO 500
C**** OUTFLOW IN SURCHARGED CONDITION
  440 IF(Y1-Y2) 480,480,460
  460 HEADW=Y1-AMAX1(Y2,YCREST(I))
      IF(COEFS(I).GT.0.0) GO TO 470
      ARE=(YTOP(I)-YCREST(I))*WLEN(I)
      COEFS(I)=ABS(QP(LINK))/(ARE*SQRT(64.4*HEADW+V2))
  470 QWEIR=COEFS(I)*WLEN(I)*(YTOP(I)-YCREST(I))*SQRT(64.4*HEADW+V2)
      GO TO 500
  480 QWEIR=0.
  500 QP(LINK)=DIR*QWEIR
  560 CONTINUE
C
C******** COMPUTE PUMP DISCHARGES
C
C******** NOTE -- ONLY ONE INFLUENT PIPE CAN BE CONNECTED TO A PUMP NODE
C
  580 IF(NPUMP)  920,920,600
  600 DO 900  I=1,NPUMP
      LINK=LPUMP(I)
      J1=NJUNC(LINK,1)
      J2=NJUNC(LINK,2)
      GO TO (710,880) IPTYP(I)
C******** COMPUTE INFLOW TO WET WELL FOR GATES OPEN CONDITION
  710 N=NCHAN(J1,1)
```

```
00169          QINJ=QP(N)
00170          JUP=NJUNC(N,1)
00171          IF(JUP.NE.J1) GO TO 711
00172          JUP=NJUNC(N,2)
00173          QINJ=-QP(N)
00174    C**** CHECK WHETHER SURCHARGE ITERATIONS OCCURING
00175      711 IF(IT) 715,715,712
00176      712 IF(Y(JUP).GT.0.96*(ZCROWN(JUP)-Z(JUP))) GO TO 715
00177          IF(Y(J1).LE.0.96*(ZCROWN(J1)-Z(J1))) GO TO 900
00178      715 IF(QINJ.LT.0.) QINJ=0.
00179          CALL DEPTH(N,NKLASS(N),QP(N),YCRIT,YNORM,TIME,ICYC)
00180    C****** SET CRITICAL DEPTH AT WET WELL FOR OFF-LINE PUMP
00181          YDEPT(J1)=AMIN1(YCRIT,YNORM)
00182          VWELL(I)=VWELL(I)+QINJ*DELT2
00183    C******** SET PUMP RATE
00184      720 QOUT=0.0
00185          IF(VWELL(I)) 800,800,740
00186      740 QOUT=PRATE(I,1)
00187          IF(VWELL(I)-VRATE(I,1)) 800,760,760
00188      760 QOUT=PRATE(I,2)
00189          IF(VWELL(I)-VRATE(I,2)) 800,780,780
00190      780 QOUT=PRATE(I,3)
00191    C******** COMPUTE NEW WET WELL VOLUME
00192      800 VNEW=VWELL(I)-QOUT*DELT2
00193    C******** CHECK FOR DRY WELL
00194          IF(VNEW) 820,820,840
00195      820 QOUT=VWELL(I)/DELT2
00196          VWELL(I)=0.0
00197          QP(LINK)=QOUT
00198          JPFUL(I)=1
00199          GO TO 900
00200    C******** CHECK FOR FLOODED WELL
00201      840 IF(VRATE(I,3)-VNEW) 860,860,870
00202      860 DIFF=(VNEW-VRATE(I,3))/DELT2
00203          VWELL(I)=VRATE(I,3)
00204          QOUT=PRATE(I,3)
00205          QP(LINK)=QOUT
00206          N=NCHAN(J1,1)
00207    C....THROTTLE PUMP STATION INFLOW
00208          QP(N)=QP(N)-SIGN(DIFF,QP(N))
00209          SUMQ(JUP)=SUMQ(JUP)+0.5*DIFF
00210          SUMQS(JUP)=SUMQS(JUP)+DIFF
00211          GO TO 900
00212    C******** NORMAL WET WELL CONDITION
00213      870 VWELL(I)=VNEW
00214          QP(LINK)=QOUT
00215          GO TO 900
00216    C
00217    C****** SET PUMP RATE FOR IN-LINE PUMP
00218    C**** CHECK WHETHER SURCHARGE ITERATIONS OCCURRING
00219      880 IF(IT) 875,875,872
00220      872 IF(Y(J1).LE.0.96*(ZCROWN(J1)-Z(J1))) GO TO 900
00221      875 JSKIP(J1)=0
00222          IF(YDEP(J1)-0.001) 882,882,885
00223      882 QINJ=0.
00224          DO 883 K=1,8
```

```
00225          N=NCHAN(J1,K)
00226          IF(N.GT.NC) GO TO 884
00227          IF(NJUNC(N,2).EQ.J1) QINJ=QINJ+QP(N)
00228      883 CONTINUE
00229      884 QOUT=QINJ
00230          GO TO 888
00231    C****** SET PUMP RATE
00232      885 QOUT = PRATE(I,1)
00233          IF(YDEP(J1).GT.VRATE(I,1)) QOUT = PRATE(I,2)
00234          IF(YDEP(J2).GT.VRATE(I,2)) QOUT = PRATE(I,3)
00235      888 QP(LINK) = QOUT
00236      900 CONTINUE
00237    C
00238    C******** SET DEPTH AT FREE OUTFALL * TIDAL NODES (ONE PIPE/NODE)
00239      920 IF(NFREE) 980,980,940
00240      940 DO 960 I=1,NFREE
00241          J=JFREE(I)
00242          N=NCHAN(J,1)
00243          LINK=NCHAN(J,2)
00244          QP(LINK)=QP(N)
00245    C.... CHECK FOR OUTFALL PIPE ON AN ADVERSE SLOPE
00246          IF(NJUNC(N,1).EQ.J)QP(LINK)=-QP(LINK)
00247          CALL DEPTH(N,NKLASS(N),QP(N),YCRIT,YNORM,TIME,ICYC)
00248          YDEPT(J)=AMIN1(YCRIT,YNORM)
00249    C******** CHECK FOR FULL PIPE OR SURCHARGE
00250          IF(YDEPT(J).GT.DEEP(N)) YDEPT(J)=DEEP(N)
00251    C******** CHECK FOR TIDAL INFLUENCE
00252          IF((YDEPT(J)+Z(J)).LT.HTIDE) YDEPT(J)=HTIDE-Z(J)
00253      960 CONTINUE
00254    C
00255    C******** SET DEPTH AT TIDE GATE OR CLOSE GATE
00256      980 IF(NGATE) 1080,1080,1000
00257     1000 DO 1060 I=1,NGATE
00258          J=JGATE(I)
00259          N=NCHAN(J,1)
00260          LINK=NCHAN(J,2)
00261          QP(LINK)=QP(N)
00262    C**** CHECK FOR OUTFALL PIPE ON AN ADVERSE SLOPE
00263          JUP=1
00264          JDN=2
00265          IF(NJUNC(N,2).EQ.J) GO TO 1010
00266          QP(LINK)=-QP(LINK)
00267          JUP=2
00268          JDN=1
00269     1010 IF(H(N,JUP)-HTIDE) 1020,1020,1030
00270    C******** GATE CLOSED
00271     1020 YDEPT(J)=H(N,JUP)-Z(J)
00272          QP(LINK)=0.0
00273          IF(YDEPT(J).LT.0.)YDEPT(J)=0.
00274          GO TO 1060
00275    C******** GATE OPEN
00276     1030 CALL DEPTH(N,NKLASS(N),QP(N),YCRIT,YNORM,TIME,ICYC)
00277          YDEPT(J)=AMIN1(YCRIT,YNORM)
00278    C******** CHECK FOR FULL PIPE OR SURCHARGE
00279          IF(YDEPT(J).GT.DEEP(N)) YDEPT(J)=DEEP(N)
00280    C******** CHECK FOR TIDE ELEVATION
```

```
00281          IF((YDEPT(J)+Z(J)).LT.HTIDE) YDEPT(J)=HTIDE-Z(J)
00282     1060 CONTINUE
00283    C
00284     1080 RETURN
00285          END
```

```
      SUBROUTINE CURVE(X,Y,NPT,NCV,NPLOT)
      COMMON/FILES/ N5,N6,N21,N22,NPOLL,NLOCAT,QCONV,IDATEZ,LOCNOS(100),
     1TRIBA
      DIMENSION X(202,5),Y(202,5),NPT(5)
     1,DUMX(4),DUMY(4)
      COMMON/LAB/ALPHA(40),XLAB(11),YLAB(6),HORIZ(5),VERT(6)
C
C                                                SET UP X AND Y SCALES
C
      XMAX = -1.0E30
      XMIN = 1.0E30
      YMAX = -1.0E30
      YMIN = 1.0E30
      DO 100 K = 1, NCV
      N = NPT(K)
      DO 100 J = 1, N
      IF( X(J,K) .GT. XMAX ) XMAX = X(J,K)
      IF( X(J,K) .LT. XMIN ) XMIN = X(J,K)
      IF( Y(J,K) .GT. YMAX ) YMAX = Y(J,K)
      IF( Y(J,K) .LT. YMIN ) YMIN = Y(J,K)
  100 CONTINUE
      DUMX(1) = XMIN
      DUMX(2) = XMAX
      CALL SCALE(DUMX,10.0,2,1)
      DUMY(1) = YMIN
      DUMY(2) = YMAX
      CALL SCALE (DUMY,4.0,2,1)
      DO 120 K = 1, NCV
      N = NPT(K)
      X(N+1,K) = DUMX(3)
      X(N+2,K) = DUMX(4)
      Y(N+1,K) = DUMY(3)
      Y(N+2,K) = DUMY(4)
  120 CONTINUE
C
C                                                FORM X LABELS AND FACTORS
C
      XMIN= DUMX(3)
      DELTX= DUMX(4)
      XLAB(1)=XMIN
      DO 140 I=1,10
  140 XLAB(I+1)=XLAB(I)+DELTX
      XSCAL=100./(XLAB(11)-XMIN)
C
C                                                FORM Y LABELS AND FACTORS
C
      YMIN= DUMY(3)
      DELTY= DUMY(4)
      YLAB(5)=YMIN
      DO 160 I=1,4
  160 YLAB(5-I)=YLAB(6-I)+DELTY
      YSCAL=40./(YLAB(1)-YMIN)
C
C                                                INITIALIZE PLOT OUTLINE
C
      NCD=100
```

```
      CALL PPLOT(0,0,NCD,NPLOT)
      K = 1
C
C                                          DRAW IN EACH CURVE
C
      DO 240 L=1,NCV
       IF(NPT(L).EQ.0) GO TO 220
C
C                                          JOINING XO YO AND XT YT
C
      XO=XSCAL*(X(1,L)-XMIN)
      YO=YSCAL*(Y(1,L)-YMIN)
      NPOINT = NPT(L)
      DO 180 N = 2,NPOINT
      XT = XSCAL*(X(N,L) - XMIN)
      YT = YSCAL*(Y(N,L) - YMIN)
      CALL PINE(XO,YO,XT,YT,K,NPLOT)
      XO = XT
      YO = YT
  180 CONTINUE
  200 CONTINUE
  220 K = K + 1
  240 CONTINUE
C
C                                          OUTPUT FINAL PLOT
C
      NC=99
      CALL PPLOT(0,0,NC,NPLOT)
      RETURN
      END
```

```
      SUBROUTINE DEPTH (N,KLASS,QPO,YC,YNORM,TIME,ICYC)
C
C                    THIS SUBROUTINE FINDS THE CRITICAL DEPTH
C                    AND THE NORMAL DEPTH CORRESPONDING TO THE FLOW QP
C
      COMMON /BD/ANORM(26,5),HRNORM(26,5),TWNORM(26,5)
C
      COMMON/FILES/ N5,N6,N21,N22,NPOLL,NLOCAT,QCONV,IDATEZ,LOCNOS(100),
     1TRIBA
      COMMON/PIPE/LEN(187),NJUNC(187,2),AFULL(187),AT(187),
     1 Q(187),V(187),VT(187),DEEP(187),A(187),WIDE(187),RFULL(187),
     2 NKLASS(187),ZP(187,2),QT(187),QO(187),H(187,2),NCOND(187),
     3 ROUGH(187)
      COMMON/TRAP/STHETA(200),SPHI(200)
      DIMENSION KCRIT(187)
      REAL LEN
C
C                                E X E C U T I O N
C
      QP=ABS(QPO)
      YC=0.
      YNORM=0.
      IF(QP.LE.0.) RETURN
      NDIM=187
      NTYPE=KLASS
      IF(NTYPE.EQ.6) GO TO 640
C******** SPECIFY NTYPE FOR ORIFICES
      IF(NKLASS(N).EQ. 7 .OR. NKLASS(N).EQ. 8) NTYPE=1
C*********INITIALIZE KCRIT
C
      IF(ICYC.GT.1) GO TO 100
      DO 50 I=1,NDIM
      KCRIT(I)=0
   50 CONTINUE
C******** SEARCH AREA * WIDTH TABLES FOR PROPER LOCATION
  100 QCO=0.
      DO 300 I=2,26
      AREA=AFULL(N)*ANORM(I,NTYPE)
      WIDTH=WIDE(N)*TWNORM(I,NTYPE)
      QC=AREA*SQRT(32.2*AREA/WIDTH)
      IF(QC-QP) 250,200,200
  200 DELTA=(QP-QCO)/(QC-QCO)
      YC=0.04*(FLOAT(I-2)+DELTA)*DEEP(N)
      GO TO 400
  250 QCO=QC
  300 CONTINUE
C
C******** PIPE SURCHARGED AT THIS SECTION
      YC=DEEP(N)
C
C******** SEARCH AREA * RADIUS TABLES FOR PROPER LOCATION
  400 QNORMO=0.
      DO 600 I=2,26
      AREA=AFULL(N)*ANORM(I,NTYPE)
      HRAD=RFULL(N)*HRNORM(I,NTYPE)
      IF(NTYPE.EQ. 2) HRAD=WIDE(N)+2.*(I-1)/25.*DEEP(N)
```

```
      QNORM=SQRT(32.2*(ZP(N,1)-ZP(N,2))/(LEN(N)*ROUGH(N)))
     1 *AREA*HRAD**0.6667
      IF(QNORM-QP) 550,500,500
  500 DELTA=(QP-QNORMO)/(QNORM-QNORMO)
      YNORM=0.04*(FLOAT(I-2)+DELTA)*DEEP(N)
      GO TO 620
  550 QNORMO=QNORM
  600 CONTINUE
C******** PIPE SURCHARGED AT THIS SECTION
      YNORM=DEEP(N)
C
  620 RETURN
C
C******** YC AND YNORM FOR TRAPEZOIDAL CHANNELS
C
C**** COMPUTE YC
  640 QCO=0.
      DO 660 I=2,26
      YI=0.04*FLOAT(I-1)*DEEP(N)
      WIDTH=YI*(STHETA(N)+SPHI(N))+WIDE(N)
      AREA=0.5*YI*(WIDTH+WIDE(N))
      QC=AREA*SQRT(32.2*AREA/WIDTH)
      IF(QC-QP) 650,645,645
  645 DELTA=(QP-QCO)/(QC-QCO)
      YC=0.04*(FLOAT(I-2)+DELTA)*DEEP(N)
      GO TO 665
  650 QCO=QC
  660 CONTINUE
C
C**** PIPE SURCHARGED AT THIS SECTION
      YC=DEEP(N)
C
C**** COMPUTE YNORM
  665 QNORMO=0.
      SROOTS=SQRT(1.+STHETA(N)**2.)+SQRT(1.+SPHI(N)**2.)
      DO 680 I=2,26
      YI=0.04*FLOAT(I-1)*DEEP(N)
      AREA=YI*(WIDE(N)+YI/2.*(STHETA(N)+SPHI(N)))
      HRAD=AREA/(WIDE(N)+DTEMP*SROOTS)
      QNORM=SQRT(32.2*(ZP(N,1)-ZP(N,2))/(LEN(N)*ROUGH(N)))*AREA*HRAD**0.
     2677
      IF(QNORM-QP) 675,670,670
  670 DELTA=(QP-QNORMO)/(QNORM-QNORMO)
      YNORM=0.04*(FLOAT(I-2)+DELTA)*DEEP(N)
      RETURN
  675 QNORMO=QNORM
  680 CONTINUE
C**** PIPE SURCHARGED AT THIS SECTION
      YNORM=DEEP(N)
      RETURN
      END
```

```
      SUBROUTINE HEAD(N,NL,NH,HEAD1,HEAD2,QP,AREA,VEL,HRAD,ANH,ANL,RNL,
     1TIME,ICYC)
C
C                    THIS SUBROUTINE CONVERTS NODAL DEPTHS TO PIPE DEPTHS
C                    IT ALSO ASSIGNS SURFACE AREAS TO THE PROPER NODES
C                    SURFACE AREA IS NOT ASSIGNED TO ORIFICE OR WEIR LINKS
C
      COMMON /BD/ANORM(26,5),HRNORM(26,5),TWNORM(26,5)
      COMMON/FILES/ N5,N6,N21,N22,NPOLL,NLOCAT,QCONV,IDATEZ,LOCNOS(100),
     1TRIBA
      COMMON/TRAP/STHETA(200),SPHI(200)
      COMMON/JUNC/Y(187),YT(187),NCHAN(187,8),AS(187),Z(187),QIN(187),
     1 QOU(187),QINST(187),GRELEV(187),JUN(187),ZCROWN(187),JSKIP(187)
     2 ,SUMAL(187),SUMQ(187),SUMQS(187),ASFULL(187)
C
      COMMON/PIPE/LEN(187),NJUNC(187,2),AFULL(187),AT(187),
     1 Q(187),V(187),VT(187),DEEP(187),A(187),WIDE(187),RFULL(187),
     2 NKLASS(187),ZP(187,2),QT(187),QO(187),H(187,2),NCOND(187),
     3 ROUGH(187)
      REAL LEN
C
C                                E X E C U T I O N
C
      YNL=HEAD1-ZP(N,1)
      YNH=HEAD2-ZP(N,2)
C
C******** CHECK FOR DRY PIPE
      IF(YNL.LE.0..AND.YNH.LE.0.)  GO TO 220
      IF(YNL)10,10,20
C******** YNL.LE.0, YNH..GT.0 (CRIT OR NORM UPSTRM OR STORAGE DWNSTRM)
   10 IF(HEAD2-ZP(N,1)) 240,15,15
   15 IF(ZP(N,1).LE.Z(NL)) GO TO 160
      CALL DEPTH(N,NKLASS(N),QP,YC,YNORM,TIME,ICYC)
      GO TO 200
C******** YNH LE 0, YNL GT 0, CRITICAL OR NORM DOWNSTREAM
   20 IF(YNH) 25,25,30
   25 IF(ZP(N,2).LE.Z(NH)) GO TO 160
      CALL DEPTH(N,NKLASS(N),QP,YC,YNORM,TIME,ICYC)
      Y2=AMIN1(YC,YNORM)
      GO TO 180
C******** YNL AND YNH GT 0
   30 IF(QP) 35,50,50
C******** ADVERSE FLOW
   35 IF(ZP(N,1)-Z(NL)) 160,160,40
   40 CALL DEPTH(N,NKLASS(N),QP,YC,YNORM,TIME,ICYC)
      IF(YC-YNL) 160,160,200
C******** POSITIVE FLOW
   50 IF(ZP(N,2)-Z(NH)) 160,160,55
   55 CALL DEPTH(N,NKLASS(N),QP,YC,YNORM,TIME,ICYC)
      Y2=AMIN1(YC,YNORM)
      IF(Y2-YNH) 120,120,180
  120 IF(YNH-AMAX1(YC,YNORM)) 140,140,160
  140 FASNH=(YNH-Y2)/ABS(YNORM-YC)
      GO TO 165
C
C******** NORMAL SITUATION' HALF SURFACE AREA AT EACH END
```

```
  160 FASNH=1.0
  165 YMID=0.5*(YNL+YNH)
      IF (YMID.LE.0.0) YMID=0.0
      CALL HYDRAD(N,NKLASS(N),YNL,RNL,ANL,BNL)
      CALL HYDRAD(N,NKLASS(N),YMID,RMID,AMID,BMID)
      CALL HYDRAD(N,NKLASS(N),YNH,RNH,ANH,BNH)
      IF(NKLASS(N).GT. 6) GO TO 260
      AS(NL)=AS(NL)+0.25*(BNL+BMID)*LEN(N)
      AS(NH)=AS(NH)+0.25*(BMID+BNH)*LEN(N)*FASNH
      GO TO 260
C
C******** CRITICAL SECTION DOWNSTREAM' SURFACE AREA UPSTREAM
  180 YNH=Y2
      HEAD2=YNH+ZP(N,2)
      YMID=0.5*(YNL+YNH)
      IF (YMID.LE.0.0)  YMID=0.0
      CALL HYDRAD(N,NKLASS(N),YNL,RNL,ANL,BNL)
      CALL HYDRAD(N,NKLASS(N),YMID,RMID,AMID,BMID)
      CALL HYDRAD(N,NKLASS(N),YNH,RNH,ANH,BNH)
      IF(NKLASS(N).GT. 6) GO TO 260
      AS(NL)=AS(NL)+0.25*(BNL+BMID)*LEN(N)
      GO TO 260
C
C******** CRITICAL SECTION UPSTREAM' SURFACE AREA DOWNSTREAM
  200 HEAD1=YC+ZP(N,1)
      YNL=YC
      YMID=0.5*(YNL+YNH)
      IF (YMID.LE.0.0)  YMID=0.0
      CALL HYDRAD(N,NKLASS(N),YNL,RNL,ANL,BNL)
      CALL HYDRAD(N,NKLASS(N),YMID,RMID,AMID,BMID)
      CALL HYDRAD(N,NKLASS(N),YNH,RNH,ANH,BNH)
      IF(NKLASS(N).GT. 6) GO TO 260
      AS(NH)=AS(NH)+0.25*(BMID+BNH)*LEN(N)
      GO TO 260
C
C******** DRY PIPE' NO SURFACE AREA FOR ENDS WITH NEGATIVE Y
  220 HEAD1=HEAD2
      YMID=0.
      CALL HYDRAD(N,NKLASS(N),YMID,RMID,AMID,BMID)
      ANH=0.
      ANL=0.
      RNL=0.
      AREA=0.
      VEL=0.
      HRAD=.01
      QO(N)=0.0
      IF(NKLASS(N).GT. 6) RETURN
      IF(YNL.LT.-0.001) GO TO 230
      AS(NL)=AS(NL)+BMID*LEN(N)/2.
  230 IF(YNH.LT.-0.001) RETURN
      AS(NH)=AS(NH)+BMID*LEN(N)/2.

      RETURN
C
C******** DRY UPSTREAM' SURFACE AREA DOWNSTREAM
  240 HEAD1=HEAD2
```

```
      YNL=0.
      YMID=HEAD2-0.5*(ZP(N,1)+ZP(N,2))
      IF(YMID.LT.0.) YMID=0.
      CALL HYDRAD(N,NKLASS(N),YNL,RNL,ANL,BNL)
      CALL HYDRAD(N,NKLASS(N),YMID,RMID,AMID,BMID)
      CALL HYDRAD(N,NKLASS(N),YNH,RNH,ANH,BNH)
      AREA=0.25*(ANL+2.*AMID+ANH)
      VEL=0.0
      HRAD=0.5*(RMID+RNH)
      QO(N)=0.0
      IF(NKLASS(N).GT. 6) RETURN
      AS(NH)=AS(NH)+0.25*(BMID+BNH)*LEN(N)
      IF(ZP(N,1)-Z(NL).LT.0.001) AS(NL)=AS(NL)+.25*(BNL+BMID)*LEN(N)
      RETURN
C
C******** COMPUTE CROSS-SECTION AREA, VELOCITY * HYDRAULIC RADIUS
  260 AREA=0.25*(ANL+2.*AMID+ANH)
      VEL=0.
      IF(AREA.GT.0.) VEL=QP/AREA
      HRAD=0.25*(RNL+2.*RMID+RNH)
      IF (AREA.LE.0.0) QO(N)=0.0
      RETURN
      END
```

```
      SUBROUTINE HYDRAD (N,KLASS,DEPTH,HRAD,AREA,WIDTH)
C
C                    THIS SUBROUTINE COMPUTES THE HYDRAULIC RADIUS,
C                    SURFACE WIDTH, * CROSS-SECTION AREA FOR PIPE 'N'
C
      COMMON/FILES/ N5,N6,N21,N22,NPOLL,NLOCAT,QCONV,IDATEZ,LOCNOS(100),
     1TRIBA
      COMMON /BD/ANORM(26,5),HRNORM(26,5),TWNORM(26,5)
C
      COMMON/PIPE/LEN(187),NJUNC(187,2),AFULL(187),AT(187),
     1 Q(187),V(187),VT(187),DEEP(187),A(187),WIDE(187),RFULL(187),
     2 NKLASS(187),ZP(187,2),QT(187),QO(187),H(187,2),NCOND(187),
     3 ROUGH(187)
      COMMON/TRAP/STHETA(200),SPHI(200)
      REAL LEN
C
C                              E X E C U T I O N
C
      NTYPE=KLASS
      IF(DEPTH) 200,100,100
C**** SPECIFY NTYPE FOR ORIFICES
  100 IF(NKLASS(N).EQ. 7 .OR. NKLASS(N).EQ. 8) NTYPE=1
      GO TO (120,180,120,120,120,190),NTYPE
  120 FDEPTH=DEPTH/DEEP(N)
      IF(FDEPTH-1.) 140,140,160
C
C******** INTERPOLATE TABLE OF PROPERTIES
  140 I=1+IFIX(FDEPTH/0.04)
      DELTA=(FDEPTH-0.04*FLOAT(I-1))/0.04
      WIDTH = WIDE(N)*(TWNORM(I,NTYPE)+(TWNORM(I+1,NTYPE)-TWNORM(I,NTYPE
     1))*DELTA)
      AREA = AFULL(N)*(ANORM(I,NTYPE) + (ANORM(I+1,NTYPE)-ANORM(I,NTYPE)
     1)*DELTA)
      HRAD = RFULL(N)*(HRNORM(I,NTYPE)+(HRNORM(I+1,NTYPE)-HRNORM(I,NTYPE
     1))*DELTA)
      RETURN
C
C******** FULL PIPE
  160 WIDTH = 0.
      AREA=AFULL(N)
      HRAD=RFULL(N)
      RETURN
C******** RECTANGULAR SECTION (SPECIAL CASE)
C
  180 WIDTH=WIDE(N)
      AREA=WIDTH*DEPTH
      HRAD=AREA/(WIDTH+2.*DEPTH)
      HRAD=AMAX1(HRAD,0.01)
      RETURN
C
C******** TRAPEZOIDAL SECTION (SPECIAL CASE)
  190 CONTINUE
      DEPTT=DEPTH
      FDEP=DEPTH-DEEP(N)
      IF(FDEP) 196,196,194
  194 DEPTT=DEEP(N)
```

```
  196 CONTINUE
      WIDTH=WIDE(N)+DEPTT*(STHETA(N)+SPHI(N))
      AREA=DEPTT*(WIDE(N)+(DEPTT/2.)*(STHETA(N)+SPHI(N)))
      WETPER=WIDE(N)+DEPTT*(SQRT(1.+STHETA(N)**2.)+SQRT(1.+SPHI(N)**2.))
      HRAD=AREA/WETPER
      HRAD=AMAX1(HRAD,0.01)
      RETURN
C
C******** NEGATIVE DEPTH
  200 WRITE(N6,5000) NCOND(N),DEPTH
 5000 FORMAT('ONEGATIVE DEPTH ENTERED TO HYDRAD, COND.',I6,E16.4)
      DEPTH=0.
      GO TO 100
      END
```

```
      SUBROUTINE INDATA
C
C                    THIS SUBROUTINE READS AND PRINTS ALL INPUT DATA
C                    EXCEPT FOR HYDROGRAPH CARDS IN 'INFLOW'
C                    IT ALSO PERFORMS SOME INITIALIZATION
C                    ALL NODE-CONDUIT LINKAGES ARE SET UP AND
C                    CONVERTED TO THE INTERNAL NUMBER SYSTEM
C
      INTEGER IFNAM(3),OFNAM(3),IHFNM(3),INQTM(3)
      COMMON /BD/ANORM(26,5),HRNORM(26,5),TWNORM(26,5)
C
      COMMON/FILES/ N5,N6,N21,N22,NPOLL,NLOCAT,QCONV,IDATEZ,LOCNOS(100),
     1TRIBA
      COMMON/CONTR/ NTCYC,DELTQ,DELT,DELT2,TZERO,ALPHA(40),
     1 NJ,NC,NTC,NTL,ICYC,NJSW,MJSW,TIME,TIME2,A1,A2,A3,A4,A5,A6,A7,W
C
      COMMON/JUNC/Y(187),YT(187),NCHAN(187,8),AS(187),Z(187),QIN(187),
     1 QOU(187),QINST(187),GRELEV(187),JUN(187),ZCROWN(187),JSKIP(187)
     2 ,SUMAL(187),SUMQ(187),SUMQS(187),ASFULL(187)
C
      COMMON/PIPE/LEN(187),NJUNC(187,2),AFULL(187),AT(187),
     1 Q(187),V(187),VT(187),DEEF(187),A(187),WIDE(187),RFULL(187),
     2 NKLASS(187),ZP(187,2),QT(187),QO(187),H(187,2),NCOND(187),
     3 ROUGH(187)
      COMMON/TRAP/STHETA(200),SPHI(200)
C
      REAL LEN
C
      COMMON/STORE/ NSTORE,JSTORE(20),ZTOP(20),ASTORE(20)
      COMMON/ORF/ NORIF,LORIF(60),AORIF(60),CORIF(60)
      COMMON/WEIR/ NWEIR,LWEIR(60),KWEIR(60),YTOP(60),YCREST(60),
     2 WLEN(60),COEF(60),COEFS(60)
      COMMON/PUMP/ NPUMP,LPUMP(20),PRATE(20,3),VRATE(20,3),VWELL(20),
     1 JPFUL(20),IPTYP(20)
      COMMON/BND/ NFREE,JFREE(25),NTIDE,JTIDE(25),NGATE,JGATE(25)
C
      COMMON/OUT/ NPRT,IPRT,NHPRT,JPRT(20),PRTH(100,20),PRGEL(20),
     1 NQPRT,CPRT(20),PRTV(100,20),PRTQ(100,20),IDUM(12),ICOL(10),
     2 LTIME,NPLT,JPLT(20),YPLT(102,20),LPLT,KPLT(20),QPLT(102,20),
     3 TPLT(102),NPTOT,NSTART,INTER,PRTY(100,20)
      INTEGER CPRT
C
      COMMON/TIDE/ YY(50) ,TT(50) ,AA(10),XX(10),SXX(10,10),SXY(10)
C
      COMMON/HYFLOW/ ISW(187),QTAPE(187,2),JSW(65),QCARD(65,2),
     1 WATSH(187),TEO,TP,T2,TE,T20,TIMEO,NSTEPS,NINREC
C
      COMMON/LAB/ TITLE(40),XLAB(11),YLAB(6),HORIZ(5),VERT(6)
C
      COMMON/SURCHG/SURTOL,ITMAX
C
      DIMENSION OTYPE(2),EXTRAN(5),SOURCE(5),QOUT(100)
C
      DATA OTYPE/'SIDE','SUMP'/
      DATA ENOTE/6HERROR ,6HERRORS/
      DATA EXTRAN/4HEXTE,4HNDED,4H TRA,4HNSPO,4HRT  /
```

```
C
C                                E X E C U T I O N
C
      NSTOP=0
      NDIM=187
C
C******** HEADING (TITLE) CARDS
C
      READ(N5,5040) ALPHA
 5040 FORMAT(20A4)
      WRITE(N6,2999)
2999  FORMAT('1',64(2H--)/' ','ENVIRONMENTAL PROTECTION AGENCY',13X,40H*
     2***   EXTENDED TRANSPORT PROGRAM   ****,8X,'WATER RESOURCES DIVISI
     3ON'/' ','WASHINGTON, D.C.            ',16X,4H****,32X,4H****,8X,
     4'CAMP DRESSER & MCKEE INC.'/' ','                  ',28X,4H
     5****,6X,'   ANALYSIS MODULE  ',6X,4H****,8X,'ANNANDALE, VIRGINIA
     6')
      WRITE(N6,5060) ALPHA
 5060 FORMAT(' ',20A4/' ',20A4//)
C
C******** GENERAL CONTROL PARAMETERS
C
      READ(N5,5080) NTCYC,DELT,TZERO,NHPRT,NQPRT,NPLT,LPLT,NSTART,INTER,
     1 NJSW,ITMAX,SURTOL
 5080 FORMAT(I5,2F5.0,8I5,F5.0)
      DELT2=DELT/2.
      IF(N22.EQ.0)MJSW=0
      WRITE(N6,5100) NTCYC
 5100 FORMAT (19H0INTEGRATION CYCLES,I5)
      WRITE(N6,5120) DELT
 5120 FORMAT (30H0LENGTH OF INTEGRATION STEP IS,F6.0,8H SECONDS)
      IF (NSTART.LE.0)  NSTART = 1
      INTEMP=(NTCYC-NSTART)/100 + 1
      IF (INTEMP.GE.INTER) INTER=INTEMP
      WRITE(N6,5140) NSTART,INTER
 5140 FORMAT('0PRINTING STARTS IN CYCLE',I5,' AND PRINTS AT INTERVALS OF
     1',I4,' CYCLES')
      WRITE(N6,5160) TZERO
 5160 FORMAT (13H0INITIAL TIME,F6.2,6H HOURS)
      TZERO=3600.*TZERO
C
C******** PRINT AND PLOT DATA
C
C******** JUNCTION NUMBERS FOR DETAILED PRINTOUT
      READ(N5,5180)(JPRT(I),I=1,NHPRT)
 5180 FORMAT(8I10)
      WRITE(N6,5200)NHPRT,(JPRT(I),I=1,NHPRT)
 5200 FORMAT (32H0PRINTED OUTPUT AT THE FOLLOWING,I3,10H JUNCTIONS,//
     1 (10X,9I10))
C******** CONDUIT NUMBERS FOR DETAILED PRINTOUT
      READ(N5,5180)(CPRT(I),I=1,NQPRT)
      WRITE(N6,5220)NQPRT,(CPRT(I),I=1,NQPRT)
 5220 FORMAT (/,11X,'AND FOR THE FOLLOWING',I3,' CONDUITS'//(10X,9I10))
C******** JUNCTION NUMBERS FOR PLOTTING
      IF (NPLT.LE.0) GO TO 100
      READ (N5,5180) (JPLT(N),N=1,NPLT)
```

```
00113          WRITE(N6,5240) NPLT,(JPLT(N),N=1,NPLT)
00114     5240 FORMAT ('0WATER SURFACE ELEVATIONS WILL BE PLOTTED FOR THE FOLLOWI
00115         1NG ',I5,' JUNCTIONS'//(10X,9I10))
00116    C******** CONDUIT NUMBERS FOR PLOTTING
00117      100 IF (LPLT.LE.0) GO TO 120
00118          READ (N5,5180) (KPLT(N),N=1,LPLT)
00119          WRITE(N6,5260) LPLT,(KPLT(N),N=1,LPLT)
00120     5260 FORMAT('0FLOW RATE WILL BE PLOTTED FOR THE FOLLOWING',I5,' CONDUIT
00121         1S'//(10X,9I10))
00122      120 CONTINUE
00123    C
00124    C******** CONDUIT DATA
00125    C
00126          DO 260 N=1,NDIM
00127          READ (N5,5280) NCOND(N),(NJUNC(N,K),K=1,2),NKLASS(N),AFULL(N)
00128         1 ,DEEP(N),WIDE(N),LEN(N),(ZP(N,K),K=1,2),ROUGH(N),STHETA(N),
00129         2 SPHI(N)
00130     5280 FORMAT (4I5,9F5.0)
00131          IF (NCOND(N).GT.90000) GO TO 280
00132          IF(ROUGH(N) .LE. 0.0) ROUGH(N) = 0.014
00133          KLASS=NKLASS(N)
00134    C                    NKLASS=1 CIRCULAR PIPE
00135    C                    NKLASS=2 RECTANGULAR PIPE
00136    C                    NKLASS=3 HORSESHOE PIPE
00137    C                    NKLASS=4 EGGSHAPED PIPE
00138    C                    NKLASS=5 BASKETHANDLE PIPE
00139    C                    NKLASS=6  TRAPEZOIDAL CHANNEL
00140    C                    NKLASS=7-8 ORIFICES (SEE BELOW)
00141          GO TO (140,160,180,200,220,230),KLASS
00142      140 RFULL(N)=DEEP(N)/4.
00143          AFULL(N)=(3.1415926/4.)*DEEP(N)**2
00144          WIDE(N)=DEEP(N)
00145          GO TO 240
00146      160 RFULL(N)=(WIDE(N)*DEEP(N))/(2.*WIDE(N)+2.*DEEP(N))
00147          AFULL(N)=WIDE(N)*DEEP(N)
00148          GO TO 240
00149      180 RFULL(N)=0.25381*DEEP(N)
00150          GO TO 240
00151      200 RFULL(N)=0.19311*DEEP(N)
00152          GO TO 240
00153      220 RFULL(N)=0.28800*DEEP(N)
00154          GO TO 240
00155      230 AFULL(N)=DEEP(N)*(WIDE(N)+DEEP(N)/2.*(STHETA(N)+SPHI(N)))
00156          RFULL(N)=AFULL(N)/(WIDE(N)+DEEP(N)*(SQRT(1.+STHETA(N)**2.)
00157         1 +SQRT(1.+SPHI(N)**2.)))
00158          IF(WIDE(N).LE.0.) WIDE(N) = 0.01
00159      240 CONTINUE
00160      260 CONTINUE
00161      280 NC=N-1
00162          NTC=NC
00163    C******** PRINT CONDUIT DATA
00164
```

```
00165          WRITE(N6,2999)
00166          WRITE(N6,5060) ALPHA
00167          WRITE(N6,5300)
00168     5300 FORMAT(1H ,'       CONDUIT   LENGTH   CLASS     AREA    MANNING
00169         1   MAX WIDTH        DEPTH   JUNCTIONS         INVERT HEIGHT          T
00170         2RAPEZOID'/,
00171         27X,'NUMBER      (FT)                (SQ FT)   COEF.            (FT)
00172         3     (FT)      AT ENDS          ABOVE JUNCTIONS       SIDE SLOPE')
00173          NSPRT=-1
00174          DO 300 N=1,NC
00175          IF((ZP(N,1).EQ.0.).AND.(ZP(N,2).EQ.0.)) GO TO 296
00176          GO TO 297
00177      296 IF(NKLASS(N).EQ.6) WRITE(N6,5320)N,NCOND(N),LEN(N),NKLASS(N),
00178         *AFULL(N),ROUGH(N),WIDE(N),DEEP(N),(NJUNC(N,K),K=1,2),
00179         *STHETA(N),SPHI(N)
00180          IF(NKLASS(N).NE.6) WRITE(N6,5321)N,NCOND(N),LEN(N),NKLASS(N),
00181         *AFULL(N),ROUGH(N),WIDE(N),DEEP(N),(NJUNC(N,K),K=1,2)
00182          GO TO 300
00183      297 IF(NKLASS(N).EQ.6) WRITE(N6,5322)N,NCOND(N),LEN(N),NKLASS(N),
00184         *AFULL(N),ROUGH(N),WIDE(N),DEEP(N),(NJUNC(N,K),K=1,2),
00185         *(ZP(N,K),K=1,2),STHETA(N),SPHI(N)
00186          IF(NKLASS(N).NE.6) WRITE(N6,5323)N,NCOND(N),LEN(N),NKLASS(N),
00187         *AFULL(N),ROUGH(N),WIDE(N),DEEP(N),(NJUNC(N,K),K=1,2),
00188         *(ZP(N,K),K=1,2)
00189     5320 FORMAT(I4,I9,F9.0,I7,F12.2,F9.3,F15.2,F13.2,2X,2I6,
00190         *28X,2F5.2)
00191     5321 FORMAT(I4,I9,F9.0,I7,F12.2,F9.3,F15.2,F13.2,2X,2I6)
00192     5322 FORMAT(I4,I9,F9.0,I7,F12.2,F9.3,F15.2,F13.2,2X,2I6,8X,F5.2,
00193         *2X,F5.2,8X,2F5.2)
00194     5323 FORMAT(I4,I9,F9.0,I7,F12.2,F9.3,F15.2,F13.2,2X,2I6,8X,F5.2,
00195         *2X,F5.2)
00196      300 CONTINUE
00197    C
00198    C******** CHECK FOR VIOLATION OF WAVE TRAVEL/CONDUIT LENGTH RATIO
00199          DO 320 N=1,NC
00200          RATIO=SQRT(DEEP(N)*32.2)*DELT/LEN(N)
00201          IF(RATIO.GT.1.)WRITE(N6,5335)NCOND(N),RATIO
00202     5335 FORMAT(' **** WARNING **** (C*DELT/LEN) IN CONDUIT',
00203         .        I6,' IS',F5.1,' AT FULL DEPTH.')
00204      320 CONTINUE
00205    C
00206    C******** JUNCTION DATA
00207    C
00208          DO 380 J=1,NDIM
00209          READ (N5,5340) JUN(J),GRELEV(J),Z(J),QINST(J)
00210     5340 FORMAT (I5,3F5.0)
00211          IF (JUN(J).GT.90000) GO TO 400
00212          ZCROWN(J)=Z(J)
00213          JSKIP(J)=0
00214    C******** SET UP JUNCTION CONNECTIVITY ARRAY FROM PIPE DATA
00215          LOC=1
00216          SUMAL(J)=0.
00217          DO 360 N=1,NC
00218          DO 360 K=1,2
00219          IF(NJUNC(N,K)-JUN(J)) 360,340,360
00220      340 NCHAN(J,LOC)=N
```

```
00221          LOC=LOC+1
00222      360 CONTINUE
00223          IF(LOC.GT.1) GO TO 380
00224          WRITE(N6,5350) JUN(J)
00225     5350 FORMAT('0**** WARNING **** JUNCTION',I6,' IS NOT ASSOCIATED WITH '
00226         .        'ANY PIPE')
00227          JSKIP(J)=1
00228      380 CONTINUE
00229      400 NJ=J-1
00230    C
00231    C******** CONVERT CONDUIT CONNECTIVITY NUMBERS TO INTERNAL SYSTEM
00232    C******** ASSIGN POSITIVE DOWNSTREAM FLOW CONVENTION
00233          DO 600 N=1,NC
00234          DO 540 K=1,2
00235          DO 500 J=1,NJ
00236          IF(NJUNC(N,K)-JUN(J)) 500,520,500
00237      500 CONTINUE
00238          WRITE(N6,5390) NJUNC(N,K),NCOND(N)
00239     5390 FORMAT('0**** ERROR **** JUNCTION',I6,' ON CONDUIT',I6,' IS NOT '
00240         .        'CONTAINED IN JUNCTION DATA')
00241          NSTOP=NSTOP+1
00242      520 NJUNC(N,K)=J
00243      540 CONTINUE
00244          NL=NJUNC(N,1)
00245          NH=NJUNC(N,2)
00246          ZP(N,1) = Z(NL) + ZP(N,1)
00247          ZP(N,2)=Z(NH)+ZP(N,2)
00248          IF(ZP(N,1)-ZP(N,2)) 560,580,580
00249      560 TEMP=ZP(N,1)
00250          ZP(N,1)=ZP(N,2)
00251          ZP(N,2)=TEMP
00252          NJUNC(N,1) = NH
00253          NJUNC(N,2)=NL
00254          NL=NJUNC(N,1)
00255          NH=NJUNC(N,2)
00256      580 IF((ZP(N,1)+DEEP(N)).GT.ZCROWN(NL)) ZCROWN(NL)=ZP(N,1)+DEEP(N)
00257          IF((ZP(N,2)+DEEP(N)).GT.ZCROWN(NH)) ZCROWN(NH)=ZP(N,2)+DEEP(N)
00258
00259
00260          IF(ZCROWN(NL).LE.GRELEV(NL)+0.001) GO TO 590
00261          WRITE(N6,5395) NCOND(N),JUN(NL)
00262          ZCROWN(NL)=GRELEV(NL)-0.01
00263          NSTOP=NSTOP+1
00264      590 IF(ZCROWN(NH).LE.GRELEV(NH)+0.001) GO TO 600
00265
00266          WRITE(N6,5395) NCOND(N),JUN(NH)
00267     5395 FORMAT('0**** ERROR **** CONDUIT',I6,' HAS CAUSED ZCROWN OF '
00268         .        'JUNCTION',I6,' TO LIE ABOVE THE SPECIFIED GROUND ELEV.')
00269          ZCROWN(NH)=GRELEV(NH)-0.01
00270          NSTOP=NSTOP+1
00271      600 CONTINUE
00272    C******** PRINT JUNCTION DATA
00273          WRITE(N6,2999)
00274          WRITE(N6,5060) ALPHA
00275          WRITE(N6,5360)
00276     5360 FORMAT(1H ,5X,'JUNCTION     GROUND     CROWN     INVERT     QINST'
```

```
      1,15X,'CONNECTING CONDUITS'/7X,'NUMBER',7X,'ELEV.',5X,'ELEV.',6X,
      1'ELEV.',5X,'(CFS)'/)
       DO 460 J=1,NJ
       MPT=0
       NZP = 0
       DO 420 I=1,8
       K1 = NCHAN(J,I)
       IF(K1.EQ.0) GO TO 440
       IDUM(I) = NCOND(K1)
       MPT=MPT+1
C******** CHECK FOR ALL CONDUITS ABOVE JUNCTION INVERT
       JJ = 0
       IF(NJUNC(K1,1).EQ.J) JJ = 1
       IF(JJ.NE.1) JJ = 2
       IF(ZP(K1,JJ).GT.Z(J)) NZP = NZP + 1
  420  CONTINUE
  440  CONTINUE
C
       WRITE(N6,5380) J,JUN(J),GRELEV(J),ZCROWN(J),Z(J),QINST(J),
      1(IDUM(K),K=1,MPT)
 5380  FORMAT(I4,I9,F12.2,F10.2,F11.2,F10.2,15X,8I7)
       IF(NZP.LT.MPT) GO TO 450
       WRITE(N6,5381) JUN(J)
 5381  FORMAT(1X,'**** ERROR **** ALL CONDUITS CONNECTING',
      *' TO JUNCTION ',I6,' LIE ABOVE THE JUNCTION INVERT')
       NSTOP = NSTOP + 1
  450  CONTINUE
       QINST(J)=QINST(J)*DELT
  460  CONTINUE
  480  CONTINUE
       WRITE(N6,5382)
 5382  FORMAT(///,64(2H--)//)
C******** CHECK FOR HIGH PIPE
       DO 495 N=1,NC
       DO 495 K=1,2
       J = NJUNC(N,K)
       IF(ZP(N,K).EQ.Z(J)) GO TO 495
       DO 490 KK = 1,8
       NKK = NCHAN(J,KK)
       IF(NKK.EQ.N) GO TO 490
       IF(NKK.EQ.0.OR.NKK.GT.NC) GO TO 495
       JJ = 0
       IF(NJUNC(NKK,1).EQ.J) JJ = 1
       IF(JJ.NE.1) JJ = 2
       IF(ZP(N,K).LE.ZP(NKK,JJ) + DEEP(NKK)) GO TO 495
  490  CONTINUE
  491  WRITE(N6,5392) NCOND(N),JUN(J)
 5392  FORMAT(' ****** ERROR ****** THE INVERT OF ',
      *'CONDUIT',I6,' LIES ABOVE THE CROWN OF ALL OTHER ',
      *'CONDUITS AT JUNCTION',I6)
       NSTOP = NSTOP + 1
  495  CONTINUE
C
C******** STORAGE JUNCTION DATA
C
       DO 640 I=1,20
```

```
00333          READ(N5,5391) JSTORE(I),ZTOP(I),ASTORE(I)
00334     5391 FORMAT(I5,2F10.0)
00335          IF(JSTORE(I).GT.90000) GO TO 645
00336      640 CONTINUE
00337      645 NSTORE=I-1
00338          IF(NSTORE) 647,647,644
00339      644 WRITE(N6,2999)
00340          WRITE(N6,5060) ALPHA
00341          WRITE(N6,5398)
00342     5398 FORMAT('0',27(2H- ),'STORAGE JUNCTION DATA',27(2H -),/)
00343          WRITE(N6,5495)
00344     5495 FORMAT(1X,'STORAGE JUNCTION',6X,'SURFACE AREA',6X,'VOLUME',
00345         *6X,'CROWN ELEVATION',/,26X,'(FT2)',11X,'(CF)',12X,'(FT)')
00346   C******** CONVERT TO INTERNAL NUMBER SYSTEM
00347          DO 646 I=1,NSTORE
00348          DO 648 J=1,NJ
00349          IF(JSTORE(I)-JUN(J)) 648,650,648
00350      648 CONTINUE
00351          WRITE(N6,5494) JSTORE(I)
00352     5494 FORMAT('0**** ERROR **** STORAGE JUNCTION ',I6,' IS NOT
00353         * CONTAINED IN JUNCTION DATA')
00354          NSTOP=NSTOP+1
00355      650 JSTORE(I)=J
00356          ZCROWN(J) = ZTOP(I)
00357          IF(ZCROWN(J).GT.GRELEV(J)) GRELEV(J) = ZCROWN(J) + 0.1
00358          JSKIP(J)=0
00359          CF = ASTORE(I)*(ZTOP(I)-Z(J))
00360          WRITE(N6,5399)(JUN(JSTORE(I))),ASTORE(I),CF,ZTOP(I)
00361     5399 FORMAT(6X,I5,13X,F8.2,7X,F8.2,10X,F6.2)
00362      646 CONTINUE
00363          NTL=NTL+NSTORE
00364      647 CONTINUE
00365   C
00366   C******** INITIALIZE NTC AND NTL
00367          NTC=NC
00368          NTL=NC
00369   C
00370   C******** ORIFICE DATA
00371   C
00372          DO 690 I=1,60
00373          N=NTC+I
00374          READ(N5,5400) (NJUNC(N,K),K=1,2),NKLASS(N),AORIF(I),CORIF(I),
00375         *ZP(N,1)
00376   5400   FORMAT(3I5,3F5.0)
00377          IF(NJUNC(N,1).GE.90000) GO TO 695
00378      690 CONTINUE
00379      695 NORIF = I-1
00380          NTC = NTC + NORIF
00381          NTL = NTL + NORIF
00382      790 IF(NORIF) 696,696,697
00383      697 WRITE(N6,5420)
00384          DO 780 I=1,NORIF
00385          N = NTC - NORIF + I
00386          WRITE(N6,5440)(NJUNC(N,K),K=1,2),NKLASS(N),AORIF(I),
00387         *CORIF(I),ZP(N,I)
00388   C
```

```
C******** CONVERT TO INTERNAL NUMBER SYSTEM
      LORIF(I)=N
      NCOND(N)=N+90000
      DEEP(N)=SQRT(4.*AORIF(I)/3.14159)
      WIDE(N)=DEEP(N)
      AFULL(N)=AORIF(I)
      RFULL(N)=DEEP(N)/4.
      CLEN=2.*DELT*SQRT(32.2*DEEP(N))
      LEN(N)=AMAX1(200.,CLEN)
      ROUGH(N)=1.49*RFULL(N)**.67/(CORIF(I)*SQRT(LEN(N)*64.4))
      NKLASS(N)=NKLASS(N)+6
C                 NKLASS(N)=1, NKLASS(N)=7 - SIDE OUTLET
C                 NKLASS(N)=2, NKLASS(N)=8 - BOTTOM OUTLET (SUMP)
C******** SET ZP(N,1) FOR BOTTOM OUTLET
      IF(NKLASS(N).EQ. 8) ZP(N,1)=-0.96*DEEP(N)
      DO 770 K=1,2
      DO 700 J=1,NJ
      IF(NJUNC(N,K)-JUN(J)) 700,720,700
  700 CONTINUE
      WRITE(N6,5450) NJUNC(N,K)
 5450 FORMAT('0**** ERROR **** ORIFICE JUNCTION',I6,' IS NOT CONTAINED '
     .        'IN JUNCTION DATA')
      NSTOP=NSTOP+1
  720 NJUNC(N,K)=J
C******** SET ZP(N,1) AND ZP(N,2) ELEVATIONS
      IF(K.EQ.2) GO TO 725
      ZP(N,K)=ZP(N,K)+Z(J)
      ZP(N,2) = ZP(N,1) - 0.1
  725 CONTINUE
C
C.... CHECK GROUND ELEVATION
      IF(ZP(N,K)+DEEP(N).LT. GRELEV(J)) GO TO 730
      WRITE(N6,5455) JUN(J)
 5455 FORMAT('0**** ERROR **** ORIFICE TOP LIES ABOVE GROUND ELEVATION'
     .' AT JUNCTION',I7)
      NSTOP=NSTOP+1
C
  730 CONTINUE
      DO 740 KK=1,8
      IF(NCHAN(J,KK)) 760,760,740
  740 CONTINUE
  760 NCHAN(J,KK)=N
  770 CONTINUE
C******** CHECK GRAVITY FLOW DIRECTION
      IF(ZP(N,1) .GT. ZP(N,2)) GO TO 780
      J2=NJUNC(N,2)
      WRITE(N6,5458) JUN(J2)
 5458 FORMAT('0**** ERROR **** ORIFICE OUTLET AT JUNCTION',I7, 'IS
     1HIGHER THAN INLET')
      NSTOP=NSTOP+1
  780 CONTINUE
 5420 FORMAT('0',28(2H- ),'ORIFICE DATA',28(2H -),/,
     *14X,'JUNCTION',18X,'TYPE',20X,'AREA',18X,'DISCHARGE',
     *13X,'HEIGHT ABOVE',/,10X,'FROM',9X,'TO',39X,'(FT2)',
     *18X,'COEFF.',17X,'JUNCTION')
 5440 FORMAT(9X,I5,7X,I5,14X,I4,18X,F7.2,18X,F6.4,
```


Reproduced from best available copy.

```
      *18X,F6.3,4X,F6.3)
  696 CONTINUE
C
C******** WEIR DATA
C
C**** THIS ROUTINE HAS BEEN MODIFIED TO TRANSFER
C**** WEIR DISCHARGES FROM NODE TO NODE RATHER
C**** THAN FROM NODE TO CONDUIT
      DO 820 I=1,60
      N=NTC+I
      READ(N5,5460) (NJUNC(N,K),K=1,2),KWEIR(I),YCREST(I),YTOP(I),
     2 WLEN(I),COEF(I)
 5460 FORMAT(3I5,4F5.0)
      IF(NJUNC(N,1).GE.90000) GO TO 840
  820 CONTINUE
  840 NWEIR=I-1
      IF(NWEIR) 1040,1040,860
  860 WRITE(N6,5480)
 5480 FORMAT(//,'0',29(2H- ),'WEIR DATA',29(2H -),//,
     *8X,'JUNCTION',17X,'LINK',11X,'TYPE',11X,'CREST',11X,'WEIR',
     *11X,'WEIR',9X,'DISCHARGE',/,2X,'FROM',12X,'TO',12X,
     *'NUMBER',23X,'HEIGHT(FT)',7X,'TOP(FT)',6X,'LENGTH(FT)',
     *8X,'COEFF.')
 5487 FORMAT(1X,I5,10X,I5,12X,I5,11X,I2,12X,F5.2,10X,F5.2,
     *10X,F5.2,10X,F5.2)
      DO 1020 I=1,NWEIR
      N1=NTC+I
      LWEIR(I)=N1
      NCOND(N1)=90000+N1
      COEFS(I)=0.
      WRITE(N6,5487)(NJUNC(N1,K),K=1,2),NCOND(N1),KWEIR(I),
     *YCREST(I),YTOP(I),WLEN(I),COEF(I)
      DO 875 K=1,2
      IF(NJUNC(N1,K).EQ.0) GO TO 875
      DO 870 J=1,NJ
      IF(NJUNC(N1,K).EQ.JUN(J)) GO TO 871
  870 CONTINUE
      WRITE(N6,5490) NJUNC(N1,K)
 5490 FORMAT('0**** ERROR **** WEIR JUNCTION',I6,' IS NOT CONTAINED IN J
     2UNCTION DATA')
      NSTOP=NSTOP+1
  871 NJUNC(N1,K)=J
      DO 873 KK=1,8
      IF(NCHAN(J,KK)) 874,874,873
  873 CONTINUE
  874 NCHAN(J,KK) = N1
  875 CONTINUE
 1020 CONTINUE
      NTL=NTL+NWEIR
 1040 CONTINUE
C
C******** PUMP DATA
C
C**** NOTE -- ONLY ONE INFLUENT PIPE MAY BE CONNECTED TO AN OFF-LINE
C             PUMP NODE
      DO 1060 I=1,20
```

```
00501          N=NTL+I
00502          READ(N5,5540) (NJUNC(N,K),K=1,2),IPTYP(I),VWELL(I),
00503         *(PRATE(I,K),K=1,3),(VRATE(I,K),K=1,3)
00504     5540 FORMAT(3I5,7F5.0)
00505    C
00506    C       IPTYP = 1  OFF-LINE PUMP OPERATES ON WET WELL VOLUME
00507    C
00508    C       IPTYP = 2  IN-LINE PUMP OPERATES ON HEAD AT JUNCTION
00509    C
00510          IF(NJUNC(N,1).GE.90000) GO TO 1080
00511     1060 CONTINUE
00512     1080 NPUMP=I-1
00513    C******** PRINT PUMP NODES
00514          IF(NPUMP) 1260,1260,1100
00515     1100 WRITE(N6,5560)
00516     5560 FORMAT('0',30(2H- ),'PUMP DATA',30(2H -),/,
00517         *10X,'JUNCTIONS',8X,'TYPE',9X,'INITIAL VOLUME',14X,
00518         *'PUMP RATE, CFS',15X,'VOL STAGES, FT3',11X,'WET WELL',
00519         */,8X,'FROM',5X,'TO',21X,'IN WELL, FT3',11X,'1',11X,'2',
00520         *11X,'3',10X,'1',11X,'2',11X,'VOLUME, FT3')
00521          DO 1120 I=1,NPUMP
00522          N=NTL+I
00523     1120 WRITE(N6,5580) I,(NJUNC(N,K),K=1,2),IPTYP(I),VWELL(I),
00524         *(PRATE(I,K),K=1,3),(VRATE(I,K),K=1,3)
00525     5580 FORMAT(1X,I3,2(3X,I5),6X,I5,10X,F10.0,8X,F10.0,1X,
00526         *F10.0,1X,F10.0,3X,F10.0,1X,F10.0,7X,F10.0)
00527    C******** CONVERT TO INTERNAL NUMBER SYSTEM
00528          DO 1240 I=1,NPUMP
00529          N=NTL+I
00530          LPUMP(I)=N
00531          NCOND(N)=N+90000
00532          DO 1220 K=1,2
00533          DO 1140 J=1,NJ
00534          IF(NJUNC(N,K)-JUN(J)) 1140,1160,1140
00535     1140 CONTINUE
00536          WRITE(N6,5590) NJUNC(N,K)
00537     5590 FORMAT('0**** ERROR **** PUMP JUNCTION'I6,' IS NOT CONTAINED IN '
00538         .        'JUNCTION DATA')
00539          NSTOP=NSTOP+1
00540     1160 NJUNC(N,K)=J
00541          DO 1180 KK=1,8
00542          IF(NCHAN(J,KK)) 1200,1200,1180
00543     1180 CONTINUE
00544     1200 NCHAN(J,KK)=N
00545          IF(IPTYP(I).EQ.2) GO TO 1220
00546          IF(KK.LE.2) GO TO 1220
00547          IF(K.EQ.2) GO TO 1220
00548          WRITE(N6,5595) JUN(J)
00549     5595 FORMAT('0**** ERROR **** MORE THAN ONE PIPE IS INFLUENT TO PUMP JU
00550         .NCTION ',I6)
00551          NSTOP=NSTOP+1
00552     1220 CONTINUE
00553    C******** SET JSKIP AND INFLOW INDEX FOR PUMP NODE
00554          JP=NJUNC(N,1)
00555          JSKIP(JP) = 0
00556          IF(IPTYP(I).EQ.2) GO TO 1235
```

```
00557          JSKIP(JP) = 1
00558          Z(JP) = -100.
00559     1235 CONTINUE
00560          JPFUL(I)=1
00561    C
00562     1240 CONTINUE
00563          NTL=NTL+NPUMP
00564     1260 CONTINUE
00565    C
00566    C******** OUTFLOW DATA FOR OUTFALLS WITHOUT TIDE GATES
00567    C
00568          DO 1280 I=1,25
00569          READ(N5,5600) JFREE(I)
00570     5600 FORMAT(I5)
00571          IF(JFREE(I).GE.90000) GO TO 1300
00572     1280 CONTINUE
00573     1300 NFREE=I-1
00574    C******** PRINT OUTFLOW NODES
00575          IF(NFREE) 1400,1400,1320
00576     1320 WRITE(N6,5616)
00577     5616 FORMAT(//,'0',27(2H- ),'FREE OUTFALL DATA',27(2H -)//)
00578          WRITE(N6,5620) (JFREE(I),I=1,NFREE)
00579     5620 FORMAT (10X,'FREE OUTFLOW AT JUNCTIONS',4X,9I7/(39X,9I7))
00580    C******** CONVERT TO INTERNAL NUMBER SYSTEM
00581     1340 DO 1390 I=1,NFREE
00582          DO 1360 J=1,NJ
00583          IF(JFREE(I)-JUN(J)) 1360,1380,1360
00584     1360 CONTINUE
00585          WRITE(N6,5630) JFREE(I)
00586     5630 FORMAT('0**** ERROR **** FREE OUTFALL JUNCTION',I6,' IS NOT '
00587         .        'CONTAINED IN JUNCTION DATA')
00588          NSTOP=NSTOP+1
00589     1380 JFREE(I)=J
00590          N=NTL+I
00591          NJUNC(N,1)=J
00592          NJUNC(N,2)=0
00593          NCHAN(J,2)=N
00594          NCOND(N)=N+90000
00595          JSKIP(J)=1
00596     1390 CONTINUE
00597          NTL=NTL+NFREE
00598     1400 CONTINUE
00599    C
00600    C******** OUTFALL DATA FOR OUTFALLS WITH TIDE GATES
00601    C
00602          DO 1420 I=1,25
00603          READ(N5,5640) JGATE(I)
00604     5640 FORMAT(I5)
00605          IF(JGATE(I).GE.90000) GO TO 1440
00606     1420 CONTINUE
00607     1440 NGATE=I-1
00608    C******** PRINT TIDE GATE NODES
00609          IF(NGATE) 1520,1520,1460
00610          WRITE(N6,5656)
00611     5656 FORMAT(//,'0',25(2H- ),'TIDE GATE OUTFALL DATA',25(2H -),//)
00612     1460 WRITE(N6,5660) (JGATE(I),I=1,NGATE)
```

```
 5660 FORMAT(10X,'PIPE OUTFALLS WITH TIDE GATES AT JUNCTIONS',8I7/
     *(52X,8I7))
C******** CONVERT TO INTERNAL NUMBER SYSTEM
      DO 1510 I=1,NGATE
      DO 1480 J=1,NJ
      IF(JGATE(I)-JUN(J)) 1480,1500,1480
 1480 CONTINUE
      WRITE(N6,5662) JGATE(I)
 5662 FORMAT('0**** ERROR **** TIDE GATE JUNCTION',I6,' IS NOT '
     .        'CONTAINED IN JUNCTION DATA')
      NSTOP=NSTOP+1
 1500 JGATE(I)=J
      N=NTL+I
      NJUNC(N,1)=J
      NJUNC(N,2)=0
      NCHAN(J,2)=N
      NCOND(N)=N+90000
      JSKIP(J)=1
 1510 CONTINUE
      NTL=NTL+NGATE
 1520 CONTINUE
C******** INTERNAL CONNECTIVITY INFORMATION
      WRITE(N6,2999)
      WRITE(N6,5060) ALPHA
      WRITE(N6,5665)
 5665 FORMAT (////'0',23(2H- ),' INTERNAL CONNECTIVITY INFORMATION',
     *23(2H -)//)
      WRITE(N6,5670)
 5670 FORMAT ('          CONDUIT     JUNCTION     JUNCTION'/)
      N1=NC+1
      DO 1525 N=N1,NTL
      J1=NJUNC(N,1)
      J2=NJUNC(N,2)
      IF(J2.GT.0) J2 = JUN(J2)
      WRITE(N6,5675) NCOND(N),JUN(J1),J2
 5675 FORMAT(4X,I11,2I13)
 1525 CONTINUE
 1527 CONTINUE
      IF(NJ.LE.NDIM) GO TO 1530
      WRITE(N6,5676)
 5676 FORMAT('0**** ERROR **** TOTAL NUMBER OF JUNCTIONS(INCLUDING WEIRS
     .) EXCEED PROGRAM DIMENSIONS, NJ=',I4)
      NSTOP=NSTOP+1
 1530 CONTINUE
      IF(NTL.LE.NDIM) GO TO 1535
      WRITE(N6,5677) NTL
 5677 FORMAT('0**** ERROR **** TOTAL NUMBER OF LINKS EXCEEDS PROGRAM DIM
     .ENSIONS,NTL=',I4)
      NSTOP=NSTOP+1
 1535 CONTINUE
C
C******** TIDAL BOUNDARY DATA
C
      READ(N5,5720) NTIDE,A1,A2,A3,A4,A5,A6,A7,W
 5720 FORMAT (I5,8F5.0)
      GO TO (1800,1790,1780,1760),NTIDE
```

```
C
C          NTIDE=1  NO CONTROL WATERSURFACE AT THE OUTFALLS
C                2  OUTFALL CONTROL WATERSURFACE AT CONSTANT ELEVATION=A1
C                3  TIDE COEFFICIENTS READ IN
C                4  COMPUTE TIDE COEFFICIENTS
C
 1760 READ(N5,5740) KO,NI,NCHTID
 5740 FORMAT (3I5)
      READ (N5,5760) (TT(I),YY(I),I=1,NI)
 5760 FORMAT (8F10.0)
      CALL TIDCF(KO,NI,NCHTID)
      GO TO 1800
 1780 WRITE(N6,5780) A1,A2,A3,A4,A5,A6,A7,W
      W=2.*3.14159/W
 5780 FORMAT('0TIDAL COEFFICIENTS.',7F10.4/'0TIDAL PERIOD (HRS).', F8.2)
      GO TO 1800
 1790 WRITE(N6,5790) A1
 5790 FORMAT('0OUTFLOW CONTROL WATER SURFACE ELEVATION IS',F7.2,' FEET')
 1800 CONTINUE
      W=W/3600.
C
C******** SET PRINT ; PLOT ARRAYS IN INTERNAL NUMBER SYSTEM
      DO 1550 K=1,NQPRT
      DO 1540 N=1,NTC
      IF(NCOND(N)-CPRT(K)) 1540,1545,1540
 1540 CONTINUE
      WRITE(N6,5678) CPRT(K)
 5678 FORMAT('0**** ERROR **** CONDUIT',I6,' REQUESTED FOR PRINTOUT IS '
     .        'NOT CONTAINED IN CONDUIT DATA')
      NSTOP=NSTOP+1
 1545 CPRT(K)=N
 1550 CONTINUE
      IF(LPLT) 1640,1640,1560
 1560 DO 1620 K=1,LPLT
      DO 1580 N=1,NTL
      IF(NCOND(N)-KPLT(K)) 1580,1600,1580
 1580 CONTINUE
      WRITE(N6,5680) KPLT(K)
 5680 FORMAT('0**** ERROR **** CONDUIT',I6,' REQUESTED FOR PLOTTING IS '
     .        'NOT CONTAINED IN CONDUIT DATA')
      NSTOP=NSTOP+1
      GO TO 1620
 1600 KPLT(K)=N
 1620 CONTINUE
 1640 DO 1660 I=1,NHPRT
      DO 1650 J=1,NJ
      IF(JUN(J)-JPRT(I)) 1650,1655,1650
 1650 CONTINUE
      WRITE(N6,5690) JPRT(I)
 5690 FORMAT('0**** ERROR **** JUNCTION',I6,' REQUESTED FOR PRINTOUT '
     .        'IS NOT CONTAINED IN JUNCTION DATA')
      NSTOP=NSTOP+1
 1655 JPRT(I)=J
 1660 CONTINUE
      IF(NPLT.LE.0) GO TO 1740
      DO 1720 N=1,NPLT
```

```
00725          DO 1680 J=1,NJ
00726          IF (JUN(J).EQ.JPLT(N)) GO TO 1700
00727     1680 CONTINUE
00728          WRITE(N6,5700) JPLT(N)
00729     5700 FORMAT('0**** ERROR **** JUNCTION',I6,' REQUESTED FOR PLOTTING '
00730         .        'IS NOT CONTAINED IN JUNCTION DATA')
00731          NSTOP=NSTOP+1
00732          GO TO 1720
00733     1700 JPLT(N) = J
00734     1720 CONTINUE
00735     1740 CONTINUE
00736    C
00737    C******** CONDUIT INITIALIZATION
00738          DO 1820 N=1,NTC
00739     1820 ROUGH(N)=32.2*ROUGH(N)**2/2.208
00740     1824 CONTINUE
00741    C
00742    C**** READ AND WRITE INITIAL FLOWS,VELOCITIES, AND HEADS
00743    C****    FOR ALL CONDUITS AND JUNCTIONS (INCLUDING INTERNAL).
00744    C
00745          WRITE(N6,2999)
00746          WRITE(N6,5060) ALPHA
00747          WRITE(N6,11)
00748       11 FORMAT(1X,20(2H- ),' SUMMARY OF INITIAL HEADS, FLOWS AND
00749         * VELOCITIES ',22(2H- ),/)
00750          READ(N5,10) (Q(N),V(N),N=1,4)
00751          IF (Q(1).LT.99999.) GO TO 5
00752          DO 7 I = 1 , NTL
00753          Q(I)=0.
00754          V(I)=0.
00755        7 CONTINUE
00756          DO 8 J = 1 , NJ
00757          Y(J) = 0.
00758        8 CONTINUE
00759          WRITE(N6,31)
00760          GO TO 32
00761        5 CONTINUE
00762          IF(NTC.LT.5) GO TO 6
00763          READ(N5,10) (Q(N),V(N),N=5,NTL)
00764        6 READ(N5,10) (Y(J),J=1,NJ)
00765       10 FORMAT(8F10.0)
00766          WRITE(N6,12)
00767       12 FORMAT(1H0,'CONDUIT NO.',3X,'FLOW(CFS)',3X,'VELOCITY(FPS)',7X,'CON
00768         1DUIT NO.',3X,'FLOW(CFS)',3X,'VELOCITY(FPS)',7X,'CONDUIT NO.',3X,'F
00769         2LOW(CFS)',3X,'VELOCITY(FPS)'/'-----------------------------------
00770         3----',            7X,'-----------------------------------',
00771         47X,'-----------------------------------'///)
00772          DO 15 KKK=1,NTL,3
00773          KSTOP=KKK+2
00774          IF(KSTOP.GT.NTL) KSTOP=NTL
00775       15 WRITE(N6,16)(NCOND(KK), Q(KK),V(KK),KK=KKK,KSTOP)
00776       16 FORMAT(4X,I5,8X,F5.1,9X,F5.1,14X,I5,8X,F5.1,9X,F5.1,14X,I5,8X,F5.1
00777         2,9X,F5.1)
00778          WRITE(N6,2999)
00779          WRITE(N6,5060) ALPHA
00780          WRITE(N6,20)
```

```
00781      20 FORMAT(1X,26(2H- ),' SUMMARY OF INITIAL DEPTHS ',26(2H- ),/)
00782         WRITE(N6,22)
00783      22 FORMAT(1H0,7X,'JUNCTION NO.',3X,'DEPTH(FT)',7X,'JUNCTION NO.',
00784        *3X,'DEPTH(FT)',7X,'JUNCTION NO.',3X,'DEPTH(FT)',7X,
00785        *'JUNCTION NO.',3X,'DEPTH(FT)',/,8X,'------------
00786        *-----------',3(7X,'-----------------------')///)
00787         DO 25 KKK=1,NJ,4
00788         KSTOP=KKK+3
00789         IF(KSTOP.GT.NJ) KSTOP=NJ
00790      25 WRITE(N6,26)(JUN(KK),Y(KK),KK=KKK,KSTOP)
00791      26 FORMAT(4(11X,I5,9X,F5.1))
00792      31 FORMAT(///,1X,'INITIAL HEADS, FLOWS AND VELOCITIES ARE ZERO')
00793      32 CONTINUE
00794    C
00795    C******** HYDROGRAPH INPUT INITIALIZATION
00796         TP=TZERO
00797         TEO=TZERO
00798         DO 1840  L=1,NDIM
00799         ISW(L)=0
00800         DO 1840 K=1,2
00801    1840 QTAPE(L,K)=0.
00802         DO 1841 L=1,20
00803         JSW(L)=0
00804         DO 1841 K=1,2
00805    1841 QCARD(L,K)=0.
00806    C
00807    C******** INPUT HYDROGRAPH INFORMATION (TAPE)
00808    C
00809         IF(N21) 1940,1940,1860
00810    1860 CONTINUE
00811         REWIND N21
00812         READ(N21) TITLE
00813         READ(N21)(SOURCE(I),I=1,5),NSTEPS,DUM,MJSW,NPOLL,TRIBA
00814         READ(N21) (ISW(L),L=1,MJSW)
00815         READ(N21)(DUM,DUM,J=1,NPOLL)
00816         READ(N21)(DUM,DUM,J=1,NPOLL)
00817         READ(N21)(DUM,J=1,NPOLL)
00818         READ(N21) QCONV
00819         WRITE(N6,2999)
00820         WRITE(N6,5060) ALPHA
00821         WRITE(N6,5840)(SOURCE(I),I=1,5),MJSW
00822    5840 FORMAT(' TAPE INPUT HYDROGRAPHS FROM ',5A4,' BLOCK AT ',
00823        1I6,' JUNCTIONS')
00824    C******** CONVERT TO INTERNAL NUMBERS
00825         DO 1920 L=1,MJSW
00826         DO 1880 J=1,NJ
00827         IF(ISW(L)-JUN(J)) 1880,1900,1880
00828    1880 CONTINUE
00829         WRITE(N6,5820) ISW(L)
00830    5820 FORMAT('0PROGRAM CANNOT MATCH HYDROGRAPH AT NODE',I7,' TO JUNCTION
00831        1 DATA')
00832         NSTOP=NSTOP+1
00833         GO TO 1920
00834    1900 ISW(L)=J
00835    1920 CONTINUE
00836    C******** READ FIRST TWO HYDROGRAPH RECORDS
```

```
00837          READ(N21) T20,DUM,DUM,(QTAPE(L,1),(DUM,J=1,NPOLL),L=1,MJSW)
00838          WRITE(N6,5800) T20,MJSW
00839     5800 FORMAT('0****** SYSTEM INFLOWS (TAPE) AT ',F8.2,' HOURS FOR ',
00840         *I5,' JUNCTIONS',/,50X,'JUNCTION/INFLOW(CFS)',/)
00841          WRITE(N6,5830)((JUN(ISW(L)),QTAPE(L,1)),L=1,MJSW)
00842          T20=T20*3600.
00843          READ(N21) T2,DUM,DUM,(QTAPE(L,2),(DUM,J=1,NPOLL),L=1,MJSW)
00844          DO 1930 L=1,MJSW
00845          DO 1930 K=1,2
00846     1930 QTAPE(L,K)=QTAPE(L,K)*QCONV
00847          WRITE(N6,5810) T2
00848     5810 FORMAT('0****** SYSTEM INFLOWS (TAPE) AT ',F8.2,' HOURS',
00849         *'        ( JUNCTION / INFLOW, CFS)',/)
00850          WRITE(N6,5830) ((JUN(ISW(L)),QTAPE(L,2)),L=1,MJSW)
00851          T2=T2*3600.
00852          NINREC=2
00853    C
00854    C******** INPUT HYDROGRAPH DATA (CARDS)' TYPE L
00855    C
00856     1940 IF(NJSW) 2040,2040,1960
00857     1960 READ(N5,5860) (JSW(L),L=1,NJSW)
00858     5860 FORMAT(16I5)
00859          WRITE(N6,2999)
00860          WRITE(N6,5060) ALPHA
00861    C******** CONVERT TO INTERNAL NUMBERS
00862          DO 2020 L=1,NJSW
00863          DO 1980 J=1,NJ
00864          IF(JSW(L)-JUN(J)) 1980,2000,1980
00865     1980 CONTINUE
00866          WRITE(N6,5820) JSW(L)
00867          NSTOP=NSTOP+1
00868          GO TO 2020
00869     2000 JSW(L)=J
00870     2020 CONTINUE
00871    C******** READ FIRST TWO HYDROGRAPH RECORDS
00872          READ(N5,5900) TEO,(QCARD(L,1),L=1,NJSW)
00873     5900 FORMAT(8F10.0)
00874          WRITE(N6,5829) TEO,NJSW
00875          WRITE(N6,5830) ((JUN(JSW(L)),QCARD(L,1)),L=1,NJSW)
00876     5829 FORMAT('0****** SYSTEM INFLOWS (CARDS) AT',F8.2,' HOURS',
00877         *' FOR',I5,' JUNCTIONS',//)
00878     5830 FORMAT(1X,I5,'/',F7.2,7(3X,I5,'/',F7.2))
00879          READ(N5,5900) TE,(QCARD(L,2),L=1,NJSW)
00880          WRITE(N6,5831) TE
00881     5831 FORMAT('0****** SYSTEM INFLOWS (CARDS) AT',F8.2,' HOURS',
00882         *'        ( JUNCTION / INFLOW,CFS )',/)
00883    C
00884          WRITE(N6,5830)((JUN(JSW(L)),QCARD(L,2)),L=1,NJSW)
00885          TEO = TEO*3600.
00886          TE=TE*3600.
00887          TIMEO=TEO
00888     2040 CONTINUE
00889    C******** OUTPUT HYDROGRAPH INITIALIZATION
00890          IF(N22.EQ.0) GO TO 2050
00891          WRITE(N22)(ALPHA(I),I=1,40)
00892    C**** DETERMINE OUTFLOW NODES
```

```
      N1=NTC+1
      I=0
      DO 2045 N=N1,NTL
      IF(NJUNC(N,2).NE.0) GO TO 2045
      I=I+1
      QOUT(I)=Q(N)
      LOCNOS(I)=JUN(NJUNC(N,1))
 2045 CONTINUE
      NLOCAT=I
      IF(NLOCAT.LE.100) GO TO 2048
      WRITE(N6,5850)
 5850 FORMAT(1X,'****ERROR--MORE THAN 100 OUTFALL JUNCTIONS****')
      NSTOP=NSTOP+1
 2048 DUM=0.
      NDUM=0
      WRITE(N22)(EXTRAN(I),I=1,5),NTCYC,DELT,NLOCAT,NDUM,TRIBA
      WRITE(N22)(LOCNOS(K),K=1,NLOCAT)
      WRITE(N22) DUM,DUM
      WRITE(N22) DUM,DUM
      WRITE(N22) DUM
      CONV=1.
      WRITE(N22) CONV
      NHOUR=TZERO/3600.
      WRITE(N22) NHOUR,IDATEZ,NHOUR,(QOUT(K),DUM,K=1,NLOCAT)
 2050 IF(NSTOP.EQ.0) GO TO 2060
      WRITE(N6,5920)NSTOP
 5920 FORMAT('0******** EXECUTION TERMINATED BECAUSE OF ',
     *I2,' DATA ERROR(S) ********')
      STOP
 2060 CONTINUE
C
      RETURN
      END
```

```
      SUBROUTINE INFLOW
C
C                    THIS SUBROUTINE SELECTS THE INPUT HYDROGRAPH
C                    ORDINATE FROM TAPE AND/OR CARDS
C
      COMMON/FILES/ N5,N6,N21,N22,NPOLL,NLOCAT,QCONV,IDATEZ,LOCNOS(100),
     1TRIBA
      COMMON/CONTR/ NTCYC,DELTQ,DELT,DELT2,TZERO,ALPHA(40),
     1 NJ,NC,NTC,NTL,ICYC,NJSW,MJSW,TIME,TIME2,A1,A2,A3,A4,A5,A6,A7,W
C
      COMMON/JUNC/Y(187),YT(187),NCHAN(187,8),AS(187),Z(187),QIN(187),
     1 QOU(187),QINST(187),GRELEV(187),JUN(187),ZCROWN(187),JSKIP(187)
     2 ,SUMAL(187),SUMQ(187),SUMQS(187),ASFULL(187)
C
C
C
      COMMON/HYFLOW/ ISW(187),QTAPE(187,2),JSW(65),QCARD(65,2),
     1 WATSH(187),TEO,TP,T2,TE,T20,TIMEO,NSTEPS,NINREC
C
C                                E X E C U T I O N
C
      DO 100 J=1,NJ
  100 QIN(J)=QINST(J)
C
C******** TAPE VALUES FROM WATERSHED MODEL ARE INTERPOLATED
      IF(MJSW) 280,280,120
  120 CONTINUE
      IF (TZERO-T2) 135,125,125
C******** NEW INPUT DATA REQUIRED
  125 CONTINUE
      T20=T2
      TP=T20
      DO 130 L=1,MJSW
  130 QTAPE(L,1)=QTAPE(L,2)
      IF (NINREC-NSTEPS) 132,132,131
  131 WRITE(N6,4980)
 4980 FORMAT ('0',' TZERO IS LATER IN TIME THAN LAST RECORD ON TAPE FROM
     1 WATERSHED')
      STOP
  132 CONTINUE
      READ(N21) T2,DUM,DUM,(QTAPE(L,1),(DUM,J=1,NPOLL),L=1,MJSW)
      DO 133 L=1,MJSW
      QTAPE(L,2)=QTAPE(L,2)*QCONV
  133 CONTINUE
      NINREC=NINREC+1
      WRITE(N6,4999)
 4999 FORMAT(/,1X,64(2H- ),//)
      WRITE(N6,5000)T2
      WRITE(N6,5830)((JUN(ISW(L)),QTAPE(L,2)),L=1,MJSW)
      T2=T2*3600.
      GO TO 120
  135 CONTINUE
      IF (TIME-T2) 220,140,140
  140 DO 160 L=1,MJSW
      J=ISW(L)
      SLOPE=(QTAPE(L,2)-QTAPE(L,1))/(T2-T20)
```

```
00057          Q1=QTAPE(L,1)+SLOPE*(TP-T20)
00058          Q2=QTAPE(L,2)
00059      160 QIN(J)=QIN(J)+0.5*(Q1+Q2)*(T2-TP)
00060          T20=T2
00061          TP=T20
00062          DO 180 L=1,MJSW
00063      180 QTAPE(L,1)=QTAPE(L,2)
00064          IF(NINREC-NSTEPS) 200,220,220
00065      200 READ(N21) T2,(QTAPE(L,2),L=1,MJSW)
00066          TPT=T2/3600.
00067          NINREC=NINREC+1
00068          WRITE(N6,4999)
00069          WRITE(N6,5000) TPT
00070     5000 FORMAT(/,'0****** SYSTEM INFLOWS (TAPE) AT',F8.2,' HOURS',
00071         *'       ( JUNCTION / INFLOW, CFS)',/)
00072          WRITE(N6,5830)((JUN(ISW(L)),QTAPE(L,2)),L=1,MJSW)
00073          GO TO 120
00074    C******** NO NEW INPUT DATA REQUIRED
00075      220 DO 240 L=1,MJSW
00076          J=ISW(L)
00077          SLOPE=0.
00078          IF(T2.GT.T20) SLOPE=(QTAPE(L,2)-QTAPE(L,1))/(T2-T20)
00079          Q1=QTAPE(L,1)+SLOPE*(TP-T20)
00080          Q2=QTAPE(L,1)+SLOPE*(TIME-T20)
00081      240 QIN(J)=QIN(J)+0.5*(Q1+Q2)*(TIME-TP)
00082          TP=TIME
00083    C
00084    C******** CARD INPUT' VALUES ARE INTERPOLATED
00085      280 IF(NJSW) 420,420,300
00086      300 CONTINUE
00087          IF (TZERO-TE) 335,320,320
00088    C******** NEW INPUT DATA REQUIRED
00089      320 CONTINUE
00090          TEO=TE
00091          TIMEO=TEO
00092          DO 325 L=1,NJSW
00093      325 QCARD(L,1)=QCARD(L,2)
00094          READ(N5,5020) TE,(QCARD(L,2),L=1,NJSW)
00095    C
00096          WRITE(N6,4999)
00097          WRITE(N6,5831) TE
00098     5831 FORMAT('0****** SYSTEM INFLOWS (CARDS) AT',F8.2,' HOURS',
00099         *'     ( JUNCTION / INFLOW,CFS )',/)
00100    C
00101          WRITE(N6,5830)((JUN(JSW(L)),QCARD(L,2)),L=1,NJSW)
00102     5830 FORMAT(3X,I5,'/',F7.2,7(3X,I5,'/',F7.2))
00103          WRITE(N6,5832)
00104     5832 FORMAT(//)
00105          TE=3600.*TE
00106          GO TO 300
00107      335 CONTINUE
00108          IF (TIME-TE) 380,338,338
00109      338 CONTINUE
00110          DO 340 L=1,NJSW
00111          J=JSW(L)
00112          SLOPE=(QCARD(L,2)-QCARD(L,1))/(TE-TEO)
```

```
      Q1=QCARD(L,1)+SLOPE*(TIMEO-TEO)
      Q2=QCARD(L,2)
  340 QIN(J)=QIN(J)+0.5*(Q1+Q2)*(TE-TIMEO)
      TEO=TE
      TIMEO=TEO
      DO 360 L=1,NJSW
  360 QCARD(L,1)=QCARD(L,2)
      READ(N5,5020) TE,(QCARD(L,2),L=1,NJSW)
      WRITE(N6,4999)
      WRITE(N6,5831) TE
      WRITE(N6,5830)((JUN(JSW(L)),QCARD(L,2)),L=1,NJSW)
      TE=3600.*TE
      WRITE(N6,5832)
 5020 FORMAT(8F10.0)
      GO TO 300
C******** NO NEW INPUT DATA REQUIRED
  380 DO 400 L=1,NJSW
      J=JSW(L)
      SLOPE=(QCARD(L,2)-QCARD(L,1))/(TE-TEO)
      Q1=QCARD(L,1)+SLOPE*(TIMEO-TEO)
      Q2=QCARD(L,1)+SLOPE*(TIME-TEO)
      TTT=TIME-TIMEO
      IF (TTT.GT.DELT) TTT=DELT
  400 QIN(J)=QIN(J)+0.5*(Q1+Q2)*TTT
      TIMEO=TIME
C
  420 DO 440 J=1,NJ
  440 QIN(J)=QIN(J)/DELT
      RETURN
      END
```

```
      SUBROUTINE OUTPUT
C
C                    THIS SUBROUTINE PRINTS OUTPUT
C                    * CONTROLS THE PRINTER PLOT ROUTINES
C
      COMMON/FILES/ N5,N6,N21,N22,NPOLL,NLOCAT,QCONV,IDATEZ,LOCNOS(100),
     1TRIBA
      COMMON/CONTR/NTCYC,DELTQ,DELT,DELT2,TZERO,ALPHA(40),
     1 NJ,NC,NTC,NTL,ICYC,NJSW,MJSW,TIME,TIME2,A1,A2,A3,A4,A5,A6,A7,W
C
      COMMON/JUNC/Y(187),YT(187),NCHAN(187,8),AS(187),Z(187),QIN(187),
     1 QOU(187),QINST(187),GRELEV(187),JUN(187),ZCROWN(187),JSKIP(187)
     2 ,SUMAL(187),SUMQ(187),SUMQS(187),ASFULL(187)
C
      COMMON/PIPE/LEN(187),NJUNC(187,2),AFULL(187),AT(187),
     1 Q(187),V(187),VT(187),DEEP(187),A(187),WIDE(187),RFULL(187),
     2 NKLASS(187),ZP(187,2),QT(187),QO(187),H(187,2),NCOND(187),
     3 ROUGH(187)
      REAL LEN
C
      COMMON/STORE/ NSTORE,JSTORE(20),ZTOP(20),ASTORE(20)
C
      COMMON/OUT/ NPRT,IPRT,NHPRT,JPRT(20),PRTH(100,20),PRGEL(20),
     1 NQPRT,CPRT(20),PRTV(100,20),PRTQ(100,20),IDUM(12),ICOL(10),
     2 LTIME,NPLT,JPLT(20),YPLT(102,20),LPLT,KPLT(20),QPLT(102,20),
     3 TPLT(102),NPTOT,NSTART,INTER,PRTY(100,20)
      COMMON/ELEV/ ZINVRT,ZCRN,ZGRND,IPLT
      INTEGER CPRT
C
      COMMON/LAB/TITLE(40),XLAB(11),YLAB(6),HORIZ(5),VERT(6)
      COMMON/STATS/VMAXX(187),QMAXX(187),DEPMAX(187),IVHR(187),
     2IVMIN(187),IQHR(187),IQMIN(187),IDHR(187),IDMIN(187),SURLEN(187),
     3SUMQIN,VLEFT
C
      DIMENSION VERTQ(6)
      DATA VERTQ/4HCOND,4HUIT ,4H FLO,4HW   ,4HIN  ,4HCFS /
C
C                              E X E C U T I O N
C******** PRINT CONTINUITY SUMMARY
C
C
      WRITE(N6,5002)
 5002 FORMAT(////,' ',23(2H- ),' CONTINUITY BALANCE AT END OF RUN ',
     *23(2H- ),/)
 5001 FORMAT(' TOTAL SYSTEM INFLOW VOLUME =',F12.0,' CU FT',/)
      WRITE(N6,5001) SUMQIN
      WRITE(N6,5004)
 5004 FORMAT(' JUNCTION OUTFLOWS AND',/,' STREET FLOODING',/)
      WRITE(N6,5005)
 5005 FORMAT(4X,'JUNCTION',2X,'OUTFLOW, FT3',/)
      DO 119 J=1,NJ
      IF(QOU(J).GT.0.) WRITE(N6,5003) JUN(J),QOU(J)
 5003 FORMAT(7X,I5,2X,F12.0)
      SUMOUT = SUMOUT + QOU(J)
  119 CONTINUE
      WRITE(N6,5007)
```

```
 5007 FORMAT(15X,7(2H--))
      WRITE(N6,5008) SUMOUT
 5008 FORMAT(13X,'TOTAL',11X,F12.0,' CU FT',/)
      WRITE(N6,5009) VLEFT
 5009 FORMAT(' VOLUME LEFT IN SYSTEM =',5X,F12.0,' CU FT',/)
      PCTERR = ((SUMQIN-SUMOUT-VLEFT)/SUMQIN)*100.
      WRITE(N6,5006) PCTERR
 5006 FORMAT(' ERROR IN CONTINUITY, PERCENT =',F6.2)
C******** PRINT H.G.L. AND WATER DEPTH AT NODES
C
      NSTART=NSTART-LTIME*INTER
      TIMEO=TZERO+FLOAT(NSTART)*DELT
      DO 100 I=1,NHPRT
      MJPRT=JPRT(I)
      JPRT(I)=JUN(MJPRT)
  100 PRGEL(I)=GRELEV(MJPRT)
 5000 FORMAT(' ',20A4/' ',20A4//)
      DO 120 I=1,NHPRT,6
      WRITE(N6,2999)
2999  FORMAT('1',64(2H--)/' ','ENVIRONMENTAL PROTECTION AGENCY',13X,40H*
     2***   EXTENDED TRANSPORT PROGRAM   ****,8X,'WATER RESOURCES DIVISI
     3ON'/' ','WASHINGTON, D.C.            ',16X,4H****,32X,4H****,8X,
     4'CAMP DRESSER & MCKEE INC.'/' ','                    ',28X,4H
     5****,6X,'   ANALYSIS MODULE  ',6X,4H****,8X,'ANNANDALE, VIRGINIA
     6')
      WRITE(N6,5000) ALPHA
      WRITE(N6,5020)


 5020 FORMAT (1H0'  * * * * * * * * * * * * * * * * * * * * *   ',
     2'T I M E  H I S T O R Y  O F  H. G. L.    * * * * * * * * *',
     3' * * * * * * * * * * *')
      WRITE(N6,5030)
 5030 FORMAT (56X,' (VALUES IN FEET)')
      IT=I+5
      IF(IT.GT.NHPRT) IT=NHPRT
      WRITE(N6,5040) (JPRT(L),L=I,IT)
 5040 FORMAT (1H0, 8X,6(7X,'JUNCTION',I5))
      WRITE(N6,5060) (PRGEL(L),L=I,IT)
 5060 FORMAT('  TIME', 2X,6(8X,' GRND',F7.2),/,' HR . MIN',6(7X,'ELEV
     1 DEPTH'),/)
      LT=MINO(I+5,NHPRT)
      DO 120 L=1,LTIME
      TIME=(TIMEO+FLOAT((L-1)*INTER)*DELT)/3600.
      LTIMEH=IFIX (TIME)
      LTIMEM=IFIX((TIME-FLOAT(LTIMEH))*60.0+0.5)
  120 WRITE(N6,5080) LTIMEH,LTIMEM,(PRTH(L,K),PRTY(L,K),K=I,LT)
 5080 FORMAT (' ',I3,'.',I2,2X,6(F12.2,F8.2))
C
C********  COMPUTE AND PRINT SUMMARY STATISTICS FOR JUNCTIONS
C
      DO 700 J=1,NJ
      IF(J.EQ.1.OR.(J/39*39).EQ.J) GO TO 701
      GO TO 702
  701 WRITE(N6,2999)
      WRITE(N6,5000) ALPHA
```

```
00113          WRITE(N6,750)
00114      750 FORMAT(//' ',16(2H' ),2X,'S U M M A R Y  S T A T I S T I C S  F O
00115         2R  J U N C T I O N S',2X,16(2H ')//)
00116          WRITE(N6,751)
00117      751 FORMAT(' ',36X,'UPPERMOST',9X,'MAXIMUM',5X,'TIME',11X,'FEET OF',
00118         211X,'FEET MAX.',11X,'LENGTH'/' ',20X,'GROUND',9X,'PIPE CROWN',8X,
00119         3'COMPUTED',6X,'OF',11X,'SURCHARGE',10X,'DEPTH IS',14X,'OF'/' ',
00120         42X,'JUNCTION',8X,'ELEVATION',9X,'ELEVATION',10X,'DEPTH',3X,
00121         5'OCCURENCE',9X,'AT MAX.',9X,'BELOW GROUND',8X,'SURCHARGE'/' ',
00122         63X,'NUMBER',12X,'(FT)',2(13X,'(FT)'),4X,'HR.',2X,'MIN.',10X,
00123         7'DEPTH',12X,'ELEVATION',11X,'(MIN)'/' ',2X,8('-'),8X,9('-'),8X,
00124         810('-'),8X,19('-'),8X,9('-'),8X,12('-'),8X,9('-')/)
00125   C
00126   C********  COMPUTE FEET MAXIMUM DEPTH IS BELOW GROUND ELEVATION
00127      702 FTBLG=GRELEV(J)-(DEPMAX(J)+Z(J))
00128          IF(FTBLG.LE.0.0)FTBLG=0.
00129   C
00130   C********  COMPUTE FEET OF SURCHARGE AT MAXIMUM DEPTH
00131          SURMAX=DEPMAX(J)+Z(J)-ZCROWN(J)
00132          IF(SURMAX.LE.0.0) SURMAX=0.0
00133   C
00134   C********  PRINT JUNCTION STATISTICS
00135          WRITE(N6,752)  JUN(J),GRELEV(J),ZCROWN(J),DEPMAX(J),IDHR(J),
00136         2IDMIN(J),SURMAX,FTBLG,SURLEN(J)
00137      752 FORMAT(' ',4X,I5,10X,F7.2,11X,F7.2,10X,F6.2,3X,I3,3X,I2,11X,F5.2,
00138         214X,F5.2,13X,F5.1)
00139      700 CONTINUE
00140   C
00141   C******** PRINT FLOWS * VELOCITIES IN PIPES
00142   C
00143          DO 140 I=1,NQPRT
00144          L=CPRT(I)
00145      140 CPRT(I)=NCOND(L)
00146          DO 160 I=1,NQPRT,6
00147          WRITE(N6,2999)
00148          WRITE(N6,5000) ALPHA
00149          WRITE(N6,5100)
00150     5100 FORMAT (125H0  * * * * * * * * * * * * * * *  T I M E  H I S T O R
00151         1 Y  O F  F L O W  A N D  V E L O C I T Y  * * * * * * * * * * * *
00152         1* * *  /,49X,'Q(CFS), VEL(FPS)')
00153          IT=I+5
00154          IF(IT.GT.NQPRT) IT=NQPRT
00155          WRITE(N6,5120) (CPRT(L),L=I,IT)
00156
00157     5120 FORMAT (1H0,'  TIME',6(4X,'CONDUIT',I5,4X),/
00158         1 ' HR . MIN',6(2X,'FLOW   VEL        '))
00159          LT=MIN0(I+5,NQPRT)
00160          DO 160 L=1,LTIME
00161          TIME=(TIME0+FLOAT((L-1)*INTER)*DELT)/3600.
00162          LTIMEH=IFIX (TIME)
00163          LTIMEM=IFIX((TIME-FLOAT(LTIMEH))*60.0+0.5)
00164      160 WRITE(N6,5140) LTIMEH,LTIMEM,(PRTQ(L,K),PRTV(L,K),K=I,LT)
00165     5140 FORMAT (1H ,I3,'.',I2,2X,6(F7.2,F5.1,8X))
00166   C
00167   C********  COMPUTE AND PRINT SUMMARY STATISTICS FOR CONDUITS
00168   C
```

```
00169          DO 900 N=1,NC
00170          IF(N.EQ.1.OR.(N/39*39).EQ.N) GO TO 901
00171          GO TO 902
00172      901 WRITE(N6,2999)
00173          WRITE(N6,5000) ALPHA
00174          WRITE(N6,800)
00175      800 FORMAT(//' ',16(2H' '),1H',2X,'S U M M A R Y  S T A T I S T I C S
00176         2F O R  C O N D U I T S',2X,1H',16(2H ')//)
00177          WRITE(N6,801)
00178      801 FORMAT(' ',35X,'CONDUIT',5X,'MAXIMUM',5X,'TIME',7X,'MAXIMUM',
00179         25X,'TIME',6X,'RATIO OF',6X,'MAXIMUM DEPTH ABOVE'/' ',12X,
00180         32('DESIGN',5X),'VERTICAL',4X,'COMPUTED',6X,'OF',7X,'COMPUTED',
00181         46X,'OF',8X,'MAX. TO',4X,'INVERT AT CONDUIT ENDS'/' ',1X,'CONDUIT',
00182         55X,'FLOW',5X,'VELOCITY',6X,'DEPTH',7X,'FLOW',4X,'OCCURENCE',4X,
00183         6'VELOCITY',2X,'OCCURENCE',5X,'DESIGN',5X,'UPSTREAM',4X,
00184         7'DOWNSTREAM'/' ',2X,'NUMBER',5X,'(CFS)',6X,'(FPS)',7X,'(IN)',8X,
00185         8'(CFS)',3X,'HR.',2X,'MIN.',6X,'(FPS)',3X,'HR.',2X,'MIN.',6X,
00186         9'FLOW',8X,'(FT)',9X,'(FT)'/' ',1X,7('-'),4X,6('-'),2(4X,8('-')),
00187         12(4X,19('-')),4X,8('-'),4X,22('-')/)
00188   C
00189   C********  COMPUTE DESIGN VELOCITY AND FLOW IN CONDUIT
00190      902 NL=NJUNC(N,1)
00191          NH=NJUNC(N,2)
00192          SLOPE=(ZP(N,1)-ZP(N,2))/LEN(N)
00193          VDSGN=SQRT(32.2*SLOPE/ROUGH(N))*RFULL(N)**0.6666667
00194          QDSGN=AFULL(N)*VDSGN
00195   C
00196   C********  COMPUTE RATIO OF MAX TO DESIGN FLOW IN CONDUIT
00197          QRATIO=0.
00198          IF(QDSGN.GT.0.) QRATIO=QMAXX(N)/QDSGN
00199   C
00200   C********  COMPUTE MAX WATER DEPTH ABOVE CONDUIT INVERT AT BOTH ENDS
00201          DMAXNL=DEPMAX(NL)-(ZP(N,1)-Z(NL))
00202          DMAXNH=DEPMAX(NH)-(ZP(N,2)-Z(NH))
00203          VHGHT=DEEP(N)*12.0
00204   C
00205   C********  PRINT CONDUIT STATISTICS
00206          WRITE(N6,802) NCOND(N),QDSGN,VDSGN,VHGHT,QMAXX(N),IQHR(N),
00207         2IQMIN(N),VMAXX(N),IVHR(N),IVMIN(N),QRATIO,DMAXNL,DMAXNH
00208      802 FORMAT(' ',2X,I5,2(5X,F6.1),7X,F5.1,2(6X,F6.1,3X,I3,3X,I2),6X,
00209         2F6.1,7X,F5.2,8X,F5.2)
00210      900 CONTINUE
00211   C
00212   C'''''''' PRINTER PLOT PACKAGE
00213          IF(NPLT) 220,220,180
00214      180 DO 200 N=1,NPLT
00215          IPLT=1
00216          J=JPLT(N)
00217          ZINVRT=Z(J)
00218          ZCRN=ZCROWN(J)
00219          ZGRND=GRELEV(J)
00220          NJUN=JUN(J)
00221          CALL CURVE(TPLT,YPLT(1,N),NPTOT,1,NJUN)
00222      200 WRITE(N6,5160) NJUN
00223     5160 FORMAT(100X,'JUNCTION NUMBER',I7)
00224      220 IF(LPLT) 300,300,240
```

```
00225     240 DO 260 L=1,6
00226     260 VERT(L)=VERTQ(L)
00227         DO 280 N=1,LPLT
00228         IPLT=2
00229         L=KPLT(N)
00230         NKON=NCOND(L)
00231         CALL CURVE(TPLT,QPLT(1,N),NPTOT,1,NKON)
00232     280 WRITE(N6,5180) NKON
00233    5180 FORMAT(100X,'CONDUIT NUMBER',I7)
00234     300 RETURN
00235         END
```

```
      SUBROUTINE PINE(X1,Y1,X2,Y2,NSYM,NCT)
      COMMON/FILES/ N5,N6,N21,N22,NPOLL,NLOCAT,QCONV,IDATEZ,LOCNOS(100),
     1TRIBA
      COMMON/CONTR/ NTCYC,DELTQ,DELT,DELT2,TZERO,ALPHA(40),
     1 NJ,NC,NTC,NTL,ICYC,NJSW,MJSW,TIME,TIME2,A1,A2,A3,A4,A5,A6,A7,W
      COMMON/ELEV/ ZINVRT,ZCRN,ZGRND,IPLT
C
      COMMON/LAB/TITLE(40),XLAB(11),YLAB(6),HORIZ(5),VERT(6)
C
      AXA=X1
      AXB=X2
      AYA=Y1
      AYB=Y2
      IF((AXB.EQ.AXA).AND.(AYB.EQ.AYA)) RETURN
      N=1
      IF(ABS(AXB-AXA).LT.ABS(AYB-AYA)) GO TO 160
C
C     SET PARAMETERS FOR X DIRECTION
C
      IF(AXB.GT.AXA) GO TO 100
      AXA=X2
      AXB=X1
      AYA=Y2
      AYB=Y1
  100 CONTINUE
      IXA=AXA+.5
      IXB=AXB+.5
      IYA=AYA+.5
      IYB=AYB+.5
  120 CONTINUE
      IF(IXA.LT.0.OR.IXA.GT.100) GO TO 140
      IF(IYA.LT.0.OR.IYA.GT.40) GO TO 140
      CALL PPLOT(IXA,IYA,NSYM,NCT)
  140 CONTINUE
      IXA=IXA+1
      YA=(N*(AYB-AYA))/(AXB-AXA)
      IYA=AYA+YA+0.5
      N=N+1
      IF(IXA.LE.IXB) GO TO 120
      GO TO 260
C
C     SET PARAMETERS FOR Y DIRECTION
C
  160 CONTINUE
      IF(AYB.GT.AYA)   GO TO 180
      AYB=Y1
      AYA=Y2
      AXB=X1
      AXA=X2
  180 CONTINUE
      IXA=AXA+.5
      IXB=AXB+.5
      IYA=AYA+.5
      IYB=AYB+.5
  200 CONTINUE
      IF(IXA.LT.0.OR.IXA.GT.100) GO TO 220
```

```
00057          IF(IYA.LT.0.OR.IYA.GT.40) GO TO 220
00058          CALL PPLOT(IXA,IYA,NSYM,NCT)
00059      220 CONTINUE
00060          IYA=IYA+1
00061          XA=(N*(AXB-AXA))/(AYB-AYA)
00062          IXA=XA+AXA+0.5
00063          N=N+1
00064          IF(IYA-IYB) 200,240,260
00065      240 IXA = IXB
00066          GO TO 200
00067      260 RETURN
00068          END
```

```
      SUBROUTINE PPLOT(IX,IY,K,NCT)
      DIMENSION A(51,101),SYM(9)
C
      COMMON/FILES/ N5,N6,N21,N22,NPOLL,NLOCAT,QCONV,IDATEZ,LOCNOS(100),
     1TRIBA
      COMMON/CONTR/ NTCYC,DELTQ,DELT,DELT2,TZERO,ALPHA(40),
     1 NJ,NC,NTC,NTL,ICYC,NJSW,MJSW,TIME,TIME2,A1,A2,A3,A4,A5,A6,A7,W
C
      COMMON/ELEV/ ZINVRT,ZCRN,ZGRND,IPLT
C
      COMMON/LAB/TITLE(40),XLAB(11),YLAB(6),HORIZ(5),VERT(6)
C
      DATA SYM / 4H****,4H++++, 4H''''', 4HXXXX, 4H....., 4H2222,
     1 4H    , 4HIIII, 4H---- /
      IF(K-99) 100,120,260
  100 A(41-IY,IX+1)=SYM(K)
      RETURN
  120 CONTINUE
      I=0
      J2=1
      WRITE(N6,2999)
 2999 FORMAT('1',64(2H--)/' ','ENVIRONMENTAL PROTECTION AGENCY',13X,40H*
     2***   EXTENDED TRANSPORT PROGRAM   ****,8X,'WATER RESOURCES DIVISI
     3ON'/' ','WASHINGTON, D.C.            ',16X,4H****,32X,4H****,8X,
     4'CAMP DRESSER & MCKEE INC.'/' ','                    ',28X,4H
     5****,6X,'   ANALYSIS MODULE  ',6X,4H****,8X,'ANNANDALE, VIRGINIA
     6')
      WRITE(N6,1300) ALPHA
      DO 220 II=1,5
      I=I+1
      IF(IPLT.EQ.2)GO TO 130
  125 IF (II.NE.1) GO TO 130
      WRITE(N6,1050) YLAB(II),A(1,1),ZINVRT,(A(1,J),J=29,101)
      WRITE(N6,1051) A(2,1),ZCRN,(A(2,J), J=29,101)
      WRITE(N6,1052) A(3,1),ZGRND,(A(3,J),J=29,101)
      I=3
      J2=3
      GO TO 135
  130 WRITE(N6,1100) YLAB(II),(A(I,J),J=1,101)
      IF(II.EQ.5) GO TO 240
  135 DO 200 JJ=J2,9
      I=I+1
      IF(I.NE.28) GO TO 140
      WRITE(N6,1500) VERT(5),VERT(6),(A(I,J),J=1,101)
      GO TO 200
  140 IF(I.NE.24) GO TO 160
      WRITE(N6,1500) VERT(1),VERT(2),(A(I,J),J=1,101)
      GO TO 200
  160 IF(I.NE.26) GO TO 180
      WRITE(N6,1500) VERT(3),VERT(4),(A(I,J),J=1,101)
      GO TO 200
  180 WRITE(N6,1000) (A(I,J),J=1,101)
  200 CONTINUE
      J2=1
  220 CONTINUE
  240 CONTINUE
```

```
      WRITE(N6,1200) XLAB
      WRITE(N6,1400) HORIZ
 1000 FORMAT(18X,101A1)
 1050 FORMAT (F17.3,1X,A1,2X,'INVERT ELEV-',F8.2,' FEET',73A1)
 1051 FORMAT (18X,A1,2X,' CROWN ELEV-',F8.2,' FEET',73A1)
 1052 FORMAT (18X,A1,2X,'GROUND ELEV-',F8.2,' FEET',73A1)
 1100 FORMAT(F17.3,1X,101A1)
 1200 FORMAT(F20.1,10F10.1)
 1300 FORMAT(' ',20A4/' ',20A4//)
 1400 FORMAT(/45X,20A4)
 1500 FORMAT(3X,2A4,7X,101A1)
  260 DO 300 I=1,40
      DO 280 J=1,101
  280 A(I,J)=SYM(7)
      A(I,1)=SYM(8)
  300 CONTINUE
      DO 320 J=1,101
  320 A(41,J)=SYM(9)
      DO 340  I=1,101,10
  340 A(41,I)=SYM(8)
      DO 360 I=11,31,10
      A(I,1)=SYM(9)
  360 CONTINUE
      RETURN
      END
```

```
      SUBROUTINE SCALE (ARRAY,AXLEN,NPTS,INC)
      COMMON/FILES/ N5,N6,N21,N22,NPOLL,NLOCAT,QCONV,IDATEZ,LOCNOS(100),
     1TRIBA
      DIMENSION ARRAY(NPTS),INT(5)
      DATA INT /2,4,5,8,10/
      INCT=IABS(INC)
C
C                                                   SCAN FOR MAX AND MIN
C
      AMAX=ARRAY(1)
      AMIN=ARRAY(1)
      DO 100 N=1,NPTS,INCT
      IF(AMAX.LT.ARRAY(N)) AMAX=ARRAY(N)
      IF(AMIN.GT.ARRAY(N)) AMIN=ARRAY(N)
  100 CONTINUE
      IF( AMAX - AMIN ) 180,120,180
C
C                                                   RESET MAX AND MIN FOR ZERO RANGE
C
  120 IF( AMIN ) 160,320,140
  140 AMIN = 0.0
      AMAX = 2.0 * AMAX
      GO TO 180
  160 AMAX = 0.0
      AMIN = 2.0 * AMIN
  180 CONTINUE
C
C                                                   COMPUTE UNITS/INCH
C
      RATE=(AMAX-AMIN)/AXLEN
C
C                                                             SCALE INTERVAL TO
C                                                             LESS THAN 10
      A=ALOG10(RATE)
      N=A
      IF(A.LT.0) N=A-0.9999
      RATE=RATE/(10.**N)
      L=RATE+1.00
C
C                                                   FIND NEXT HIGHER INTERVAL
C
  200 DO 220 I=1,5
      IF(L-INT(I)) 240,240,220
  220 CONTINUE
C
C                                                   L IS NEXT HIGHER INTERVAL
C                                                   RANGE IS SCALED BACK TO FULL SET
C
  240 L=INT(I)
      RANGE=FLOAT(L)*10.**N
      IF(INC.LT.0) GO TO 300
C
C                                                   SET UP POSITIVE STEPS
C
      K=AMIN/RANGE
      IF(AMIN.LT.0.) K=K-1
```

```
C
C                                          CHECK FOR MAX VALUE IN RANGE
C
      IF(AMAX.GT.(K+AXLEN)*RANGE) GO TO 260
      I=NPTS*INCT+1
      ARRAY(I)=K*RANGE
      I=I+INCT
      ARRAY(I)=RANGE
      RETURN
C
C                                          IF OUTSIDE RANGE RESET L AND N
C
  260 L=L+1
      IF(L.LT.11) GO TO 200
      L=2
      N=N+1
  280 GO TO 200
C
C                                          SET UP NEGATIVE STEPS
C
  300 K=AMAX/RANGE
      IF(AMAX.GT.0.) K=K+1
      IF(AMIN.LT.(K+AXLEN)*RANGE) GO TO 260
      I=INCT*NPTS+1
      ARRAY(I)=K*RANGE
      I=I+INCT
      ARRAY(I)=-RANGE
      RETURN
  320 WRITE(N6,1000)
 1000 FORMAT( // 10X, 'RANGE AND SCALE ARE ZERO ON PLOT ATTEMPT'  )
      RETURN
      END
```

```
      SUBROUTINE TIDCF(KO,NI,NCHTID)
C
C                    THIS SUBROUTINE COMPUTES SEVEN COEFFICIENTS
C                    FOR A FOURIER EXPANSION OF THE DIURNAL TIDE STAGE
C
      COMMON/FILES/ N5,N6,N21,N22,NPOLL,NLOCAT,QCONV,IDATEZ,LOCNOS(100),
     1TRIBA
      COMMON/CONTR/ NTCYC,DELTQ,DELT,DELT2,TZERO,ALPHA(40),
     1 NJ,NC,NTC,NTL,ICYC,NJSW,MJSW,TIME,TIME2,A1,A2,A3,A4,A5,A6,A7,W
C
      COMMON/TIDE/ YY(50) ,TT(50) ,AA(10),XX(10),SXX(10,10),SXY(10)
C
C                                          TIDE COEFFICIENTS
C                                          TIDAL CURVE FIT, 7 TERM
C                                          SINUSOIDAL EQUATION
C
      WRITE(N6,140) KO,NI,NCHTID
  140 FORMAT  (7H0 KO IS,I3,19H NUMBER OF POINTS =,I4,35H MAXIMUM NUMBER
     1 OF ITERATIONS IS 50,21H TIDE CHECK SWITCH IS,I2)
C
C                                          IF KO EQUALS ONE, PROGRAM WILL
C                                          READ FOUR POINTS OF INFORMATION
C                                          AND EXPAND THEM FOR A FULL TIDE
C
C                                          NT IS THE NUMBER OF INFORMATION
C                                          POINTS
C                                          IF NCHTID EQUALS ONE, TIDAL
C                                          INPUT-OUTPUT WILL BE PRINTED
C
C                                          MAXIT IS THE MAXIMUM NUMBER OF
C                                          ITERATIONS
C                                          DELTA IS THE ACCURACY
C                                          LIMIT IN FEET
C
      PERIOD = 25.
      MAXIT = 50
      DELTA = 0.005
      NTT=7
      W = 2.*3.14159 /PERIOD
      IF(KO.EQ.0) GO TO 225
      TT(50) =TT(1)+PERIOD
      YY(50)=YY(1)
      DO 220 I=1,4
      J=I+1
      IF (J.GT.4) J=50
      NI=NI+1
      TT(NI)=(3.*TT(I)+TT(J))/4.
      YY(NI)=0.8535*YY(I)+0.1465*YY(J)
      NI=NI+1
      TT(NI)=(TT(I)+TT(J))/2.
      YY(NI)=(YY(I)+YY(J))/2.
      NI=NI+1
      TT(NI)=(TT(I)+3.*TT(J))/4.
      YY(NI)=0.1465*YY(I)+0.8535*YY(J)
  220 CONTINUE
  225 CONTINUE
```

```
00057          IF (NCHTID.NE.1) GO TO 240
00058          WRITE(N6,146)
00059      146 FORMAT (29H0 NO.       TIME          VALUE  )
00060          WRITE(N6,148) (I,TT(I), YY(I), I=1,NI)
00061      148 FORMAT (I4, 2F12.3 )
00062      240 CONTINUE
00063          DO 280 J=1,NTT
00064          DO 260 K=1,NTT
00065      260 SXX(K,J) = 0.
00066          AA(J) = 0.
00067      280 SXY(J) = 0.
00068          NJ2 = NTT/2 + 1
00069          DO 360 I = 1,NI
00070          DO 320 J = 1,NTT
00071          FJ1 = FLOAT(J-1)
00072          FJ3 = FLOAT ( J-NJ2 )
00073          IF ( J.LE.NJ2 ) GO TO 300
00074          XX(J) = COS(FJ3*W*TT(I))
00075          GO TO 320
00076      300 XX(J) = SIN(FJ1*W*TT(I))
00077          IF( J.EQ.1 )XX(J) = 1.
00078      320 SXY(J) = SXY(J) +XX(J) *YY(I)
00079          DO 340 J = 1,NTT
00080          DO 340 K = 1,NTT
00081      340 SXX(K,J) = SXX(K,J) +XX(K) *XX(J)
00082      360 CONTINUE
00083          IT = 0
00084      380 IT = IT + 1
00085          DELMAX = 0.
00086          DO 420 K = 1,NTT
00087          SUM = 0.
00088          DO 400 J = 1,NTT
00089          IF (J.EQ.K) GO TO 400
00090          SUM = SUM -AA(J)*SXX(K,J)
00091      400 CONTINUE
00092          SUM = (SUM+SXY(K))/SXX(K,K)
00093          DEL = ABS(SUM-AA(K))
00094          IF (DEL.GT.DELMAX ) DELMAX = DEL
00095      420 AA(K) = SUM
00096          IF ( IT.GE.MAXIT ) GO TO 440
00097          IF (DELMAX.GT.DELTA ) GO TO 380
00098          GO TO 460
00099      440 WRITE(N6,150)
00100      150 FORMAT ('  CANNOT REACH DESIRED DELTA, INCREASE EITHER NI OR DELTA
00101         1 AND TRY AGAIN')
00102          STOP
00103      460 CONTINUE
00104          A1 = AA(1)
00105          A2 = AA(2)
00106          A3 = AA(3)
00107          A4 = AA(4)
00108          A5 = AA(5)
00109          A6 = AA(6)
00110          A7 = AA(7)
00111          IF (NCHTID.NE.1) GO TO 540
00112          WRITE(N6,152)
```

```
  152 FORMAT (46H0      TIME    OBSERVED    COMPUTED      DIFF  )
      RES = 0.
      DO 520 I = 1,NI
      SUM = 0.
      DO 500 J = 2,NTT
      FJ1 = FLOAT ( J-1 )
      FJ3 = FLOAT ( J-NJ2 )
      IF ( J.LE.NJ2 ) GO TO 480
      SUM = SUM +AA(J) *COS(FJ3*W*TT(I))
      GO TO 500
  480 SUM = SUM +AA(J) *SIN(FJ1*W*TT(I))
  500 CONTINUE
      SUM = SUM +AA(1)
      DIFF = SUM -YY(I)
      RES = RES + ABS(DIFF)
  520 WRITE(N6,154) TT(I),YY(I),SUM,DIFF
  154 FORMAT ( 4F12.4 )
      WRITE(N6,156) RES
  156 FORMAT (6H0TOTAL , 30X, F12.4 )
  540 CONTINUE
C
C                                        CONSTANTS FOR INPUT WAVE FORM
C
      WRITE(N6,158)A1,A2,A3,A4,A5,A6,A7
  158 FORMAT(///46H COEFFICIENTS FOR TIDAL STAGE ARE                //85H
     1      A1         A2         A3         A4         A5         A6
     2A7                  //7F10.3,F12.2///31H WHERE THE WAVEFORM IS GIVE
     3N BY//92H H(J) = A1 + A2*SIN(WT) + A3*SIN(2WT) + A4*SIN(3WT) + A5*
     4COS(WT) + A6*COS(2WT) + A7*COS(3WT))
      RETURN
      END
```