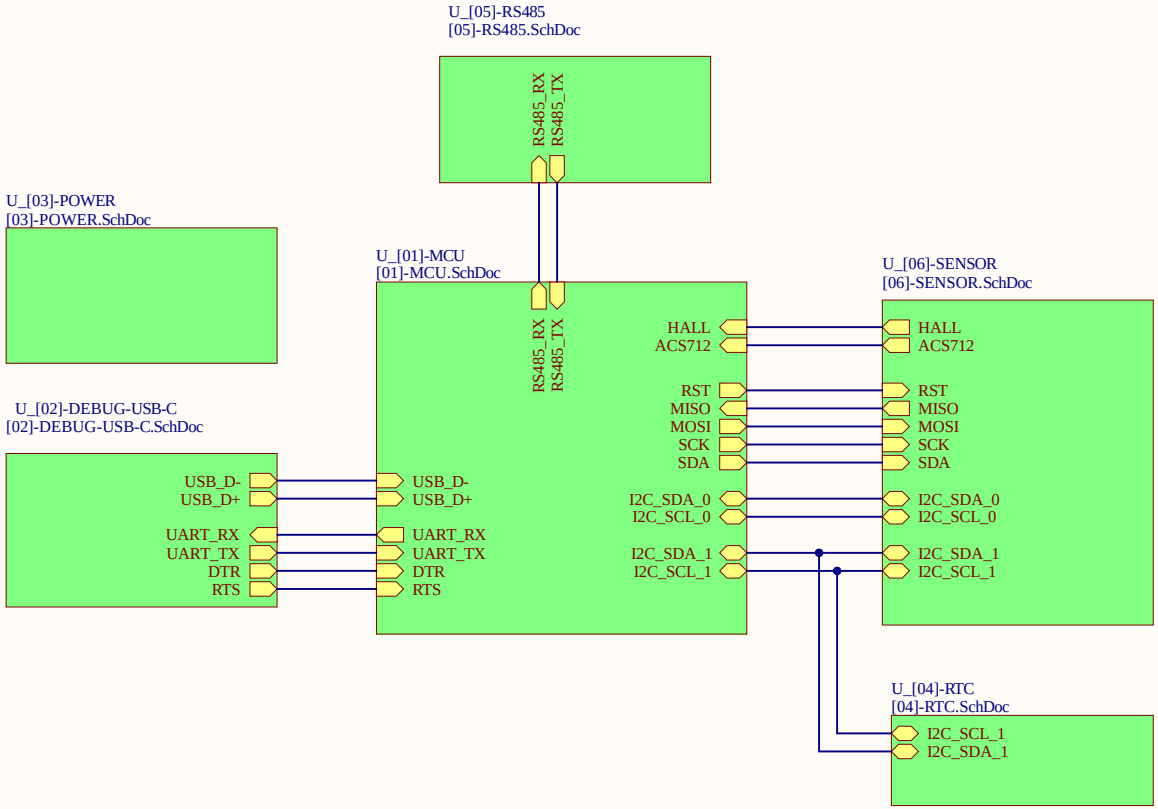

Title *			
Size: A4	Number:	Revision: *	
Author: *	Checked: *	Approved: *	
Date: 4/23/2026	Time: 12:10:00 PM	Sheet 1 of 7	
File: [00]ESP32-S3_SEWING.SchDoc			

RESET BUTTON

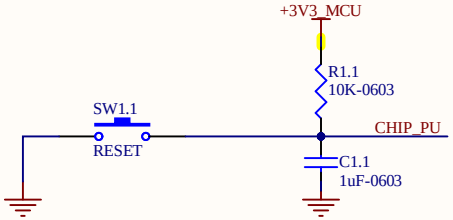

BOOT / USER BUTTON

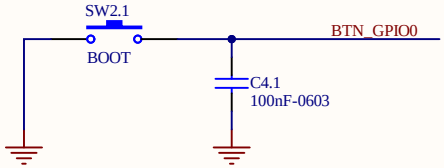

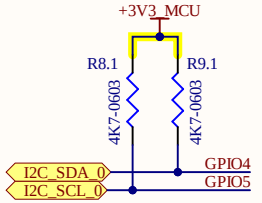

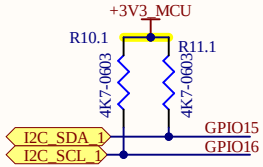

ESP32-S3 MODULE

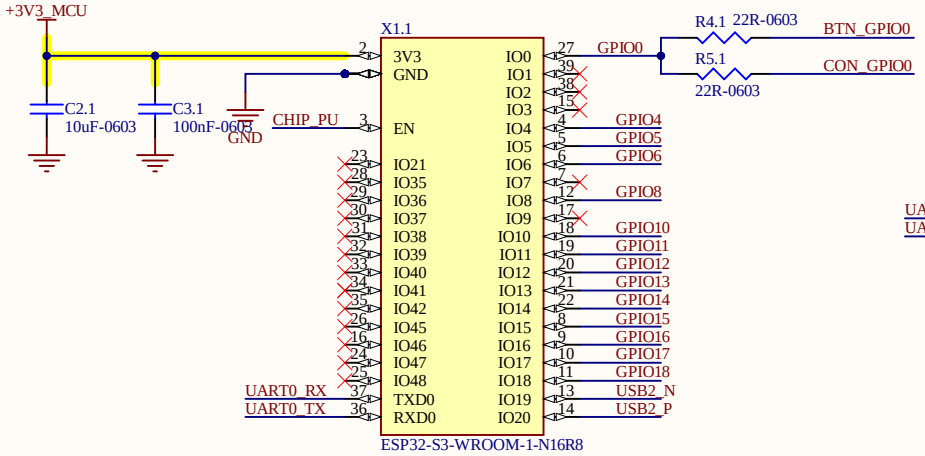

SERIAL SIGNALS HANDLING

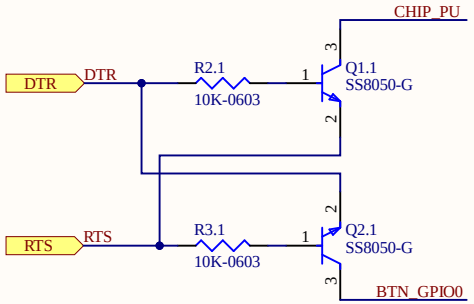

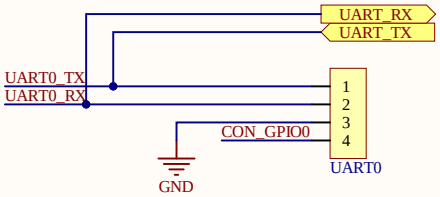

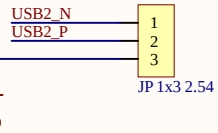

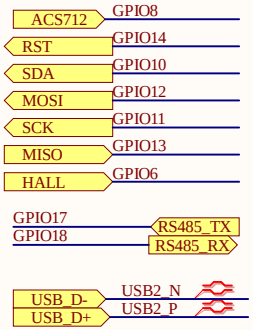

Title *			
Size: A4	Number:	Revision: *	
Author: *	Checked: *	Approved: *	
Date: 4/23/2026	Time: 12:10:00 PM	Sheet 2 of 7	
File: [01]-MCU.SchDoc			

USB-B TO UART

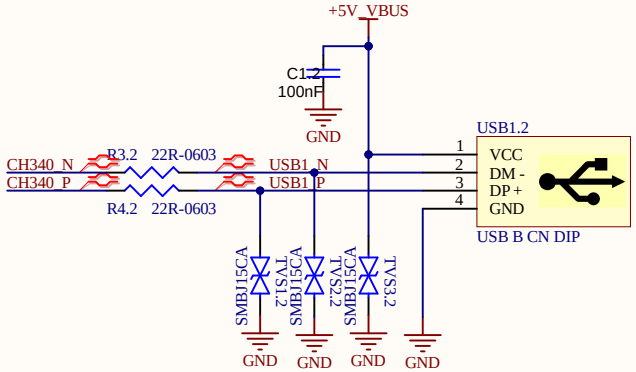

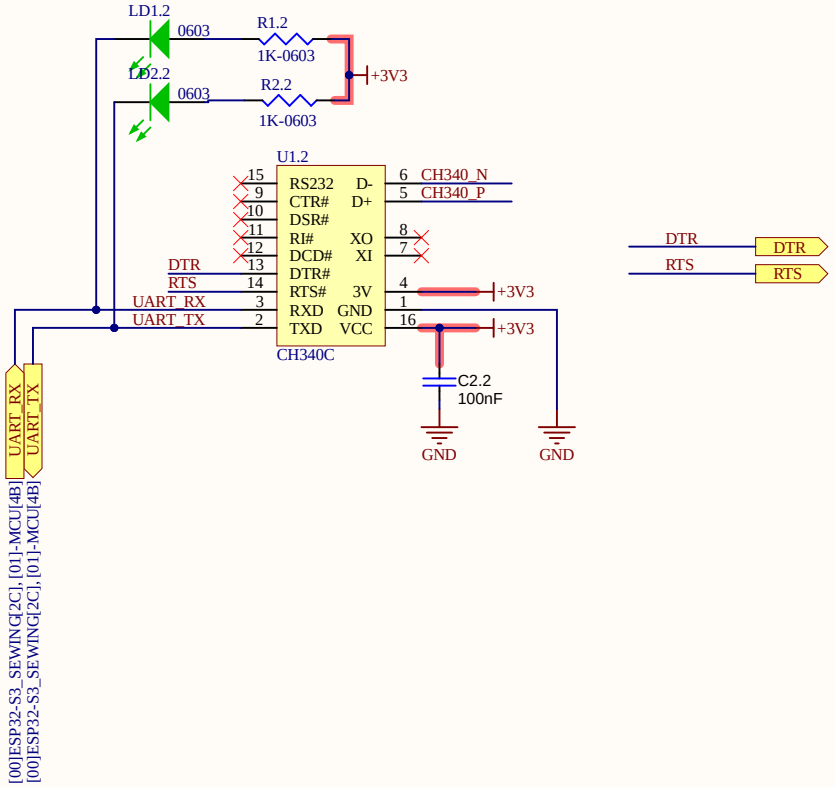

USB-B USB NATIVE

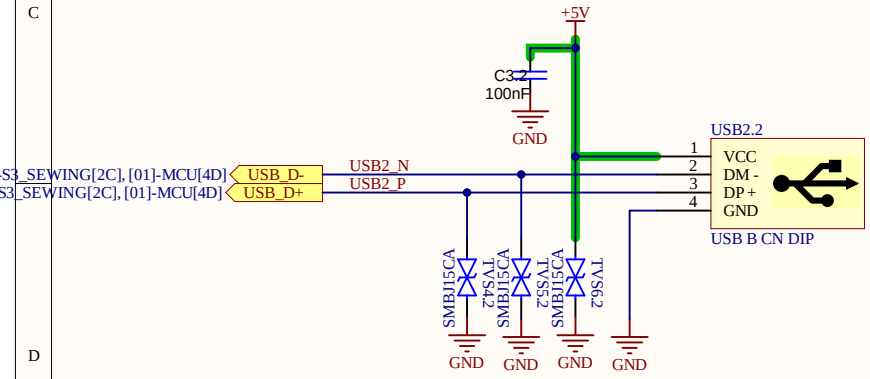

Title *			
Size: A4	Number:	Revision: *	
Author: *	Checked: *	Approved: *	
Date: 4/23/2026	Time: 12:10:00 PM	Sheet 3 of 7	
File: [02]-DEBUG-USB-C.SchDoc			

POWER

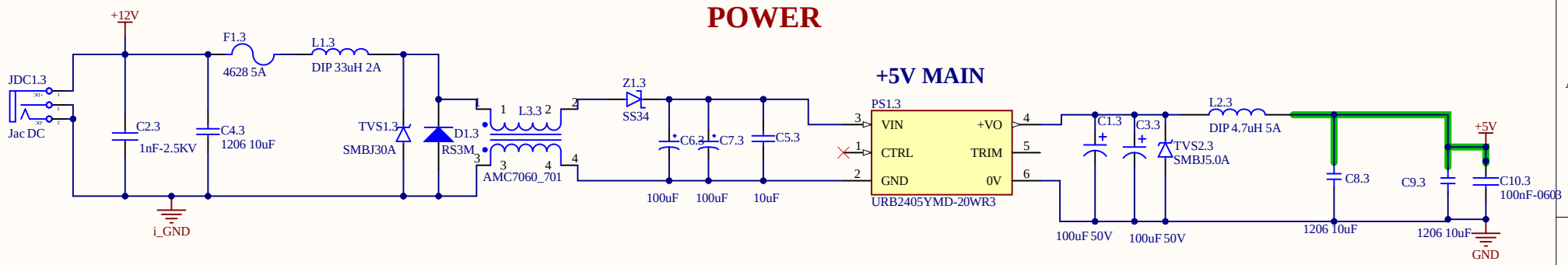

MCU

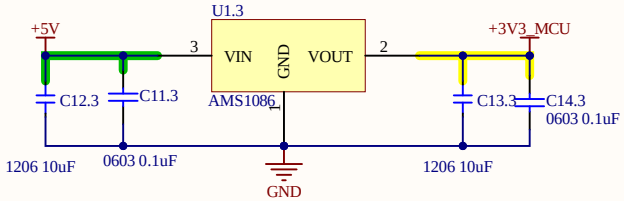

DEVICE

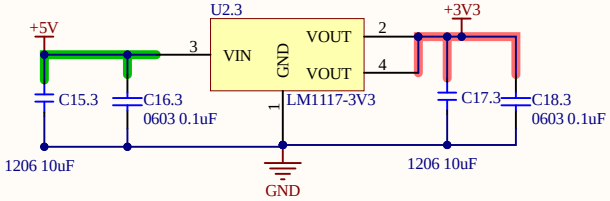

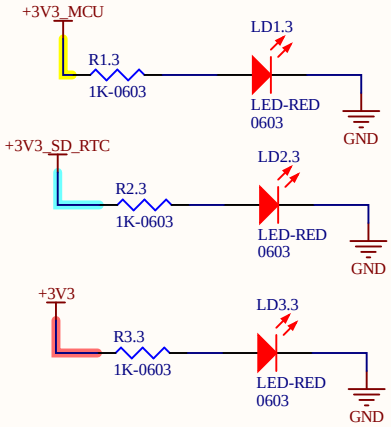

SD_RTC

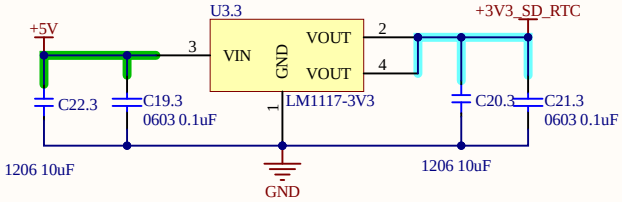

POWER SELECT

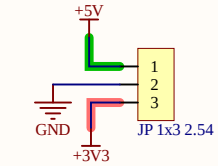

Title *			
Size: A4	Number:	Revision: *	
Author: *	Checked: *	Approved: *	
Date: 4/23/2026	Time: 12:10:00 PM	Sheet 4 of 7	
File: [03]-POWER.SchDoc			

RTC

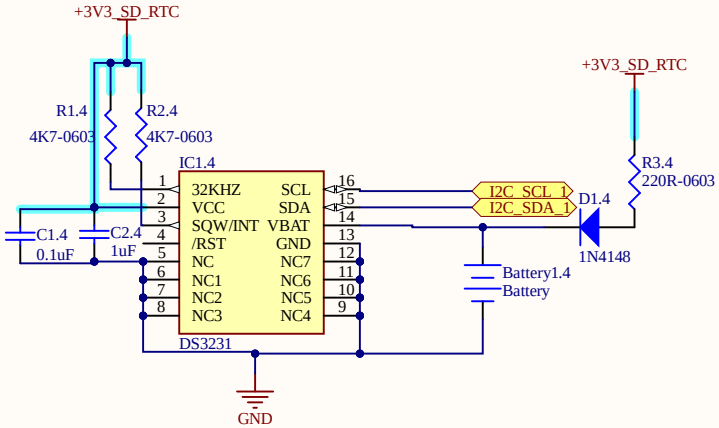

Title *			
Size: A4	Number:	Revision: *	
Author: *	Checked: *	Approved: *	
Date: 4/23/2026	Time: 12:10:01 PM	Sheet 5 of 7	
File: [04]-RTC.SchDoc			

RS485

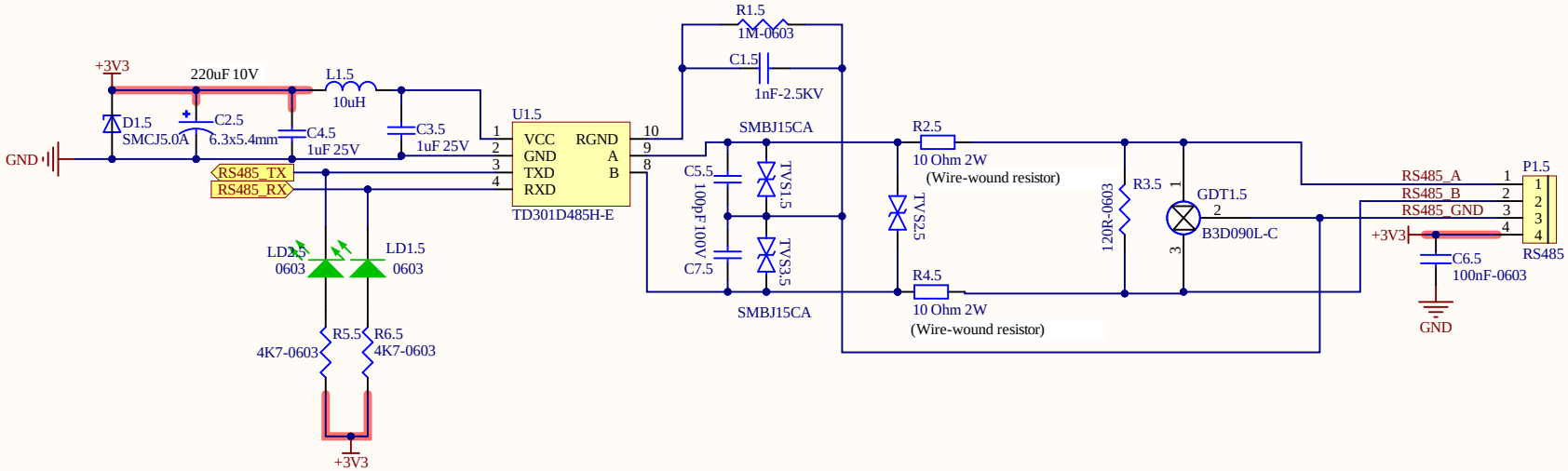

Title *			
Size: A4	Number:	Revision: *	
Author: *	Checked: *	Approved: *	
Date: 4/23/2026	Time: 12:10:01 PM	Sheet 6 of 7	
File: [05]-RS485.SchDoc			

SENSOR & DISPLAY

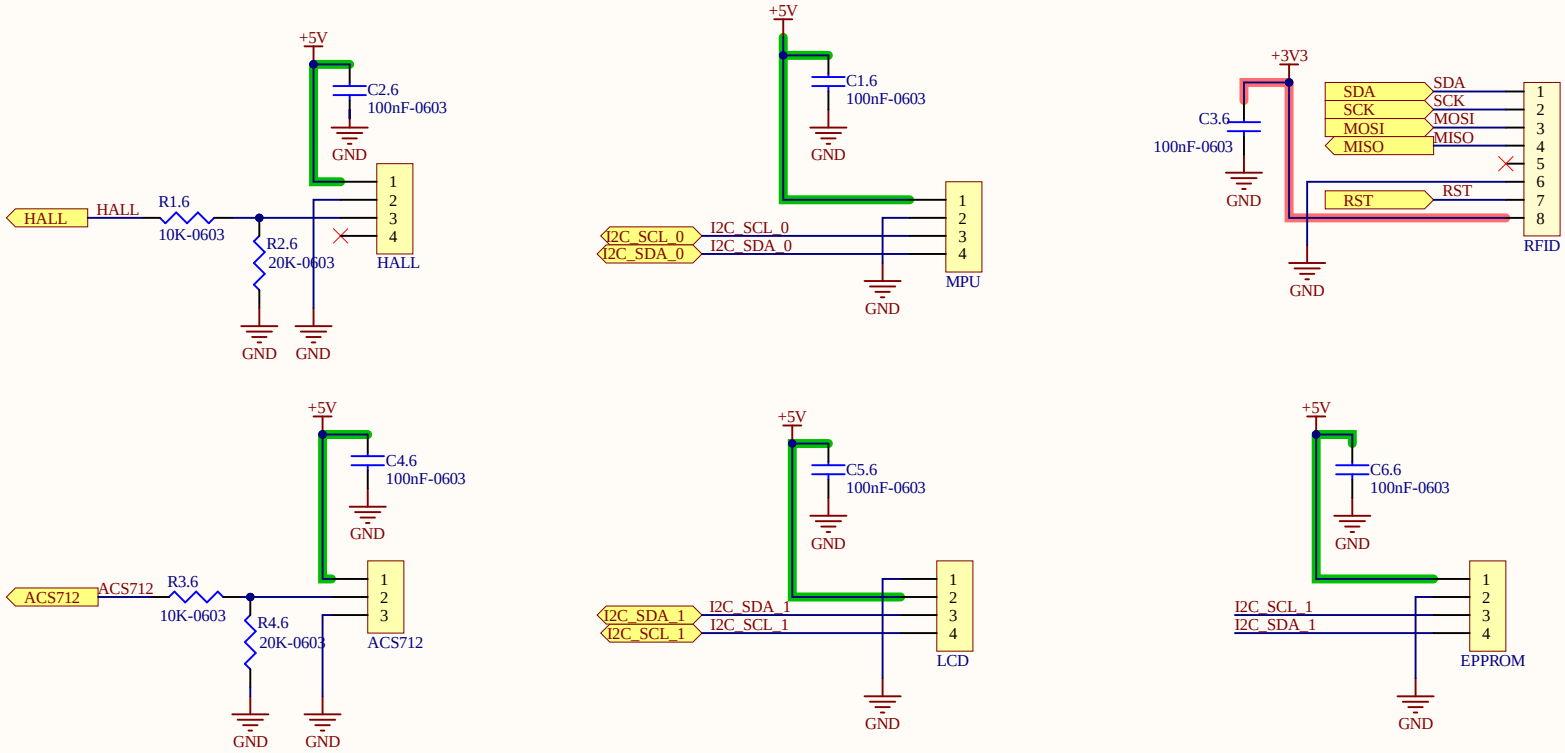

Title *			
Size: A4	Number:	Revision: *	
Author: *	Checked: *	Approved: *	
Date: 4/23/2026	Time: 12:10:01 PM	Sheet 7 of 7	
File: [06]-SENSOR.SchDoc			