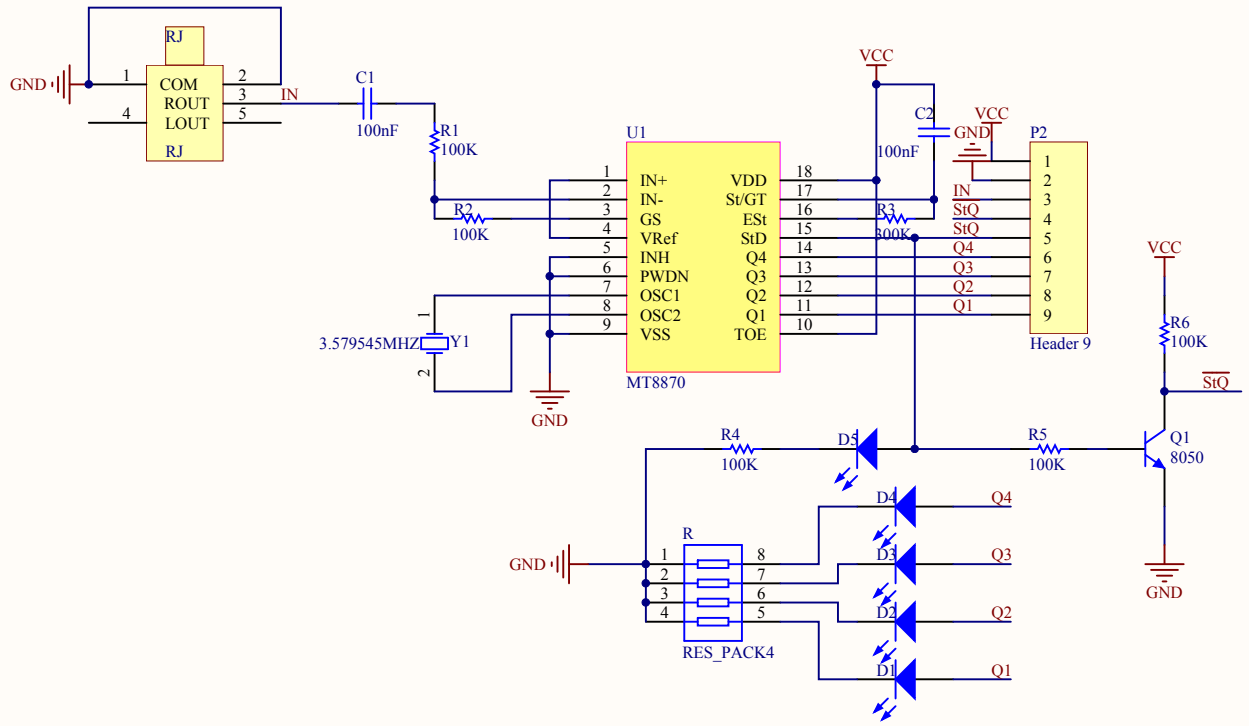

Title		
Size A4	Number	Revision
Date: 2013/9/23	Sheet of	
File: D:\PCB\ PCB\MT8870\MT8870.SchDoc	Drawn By:	