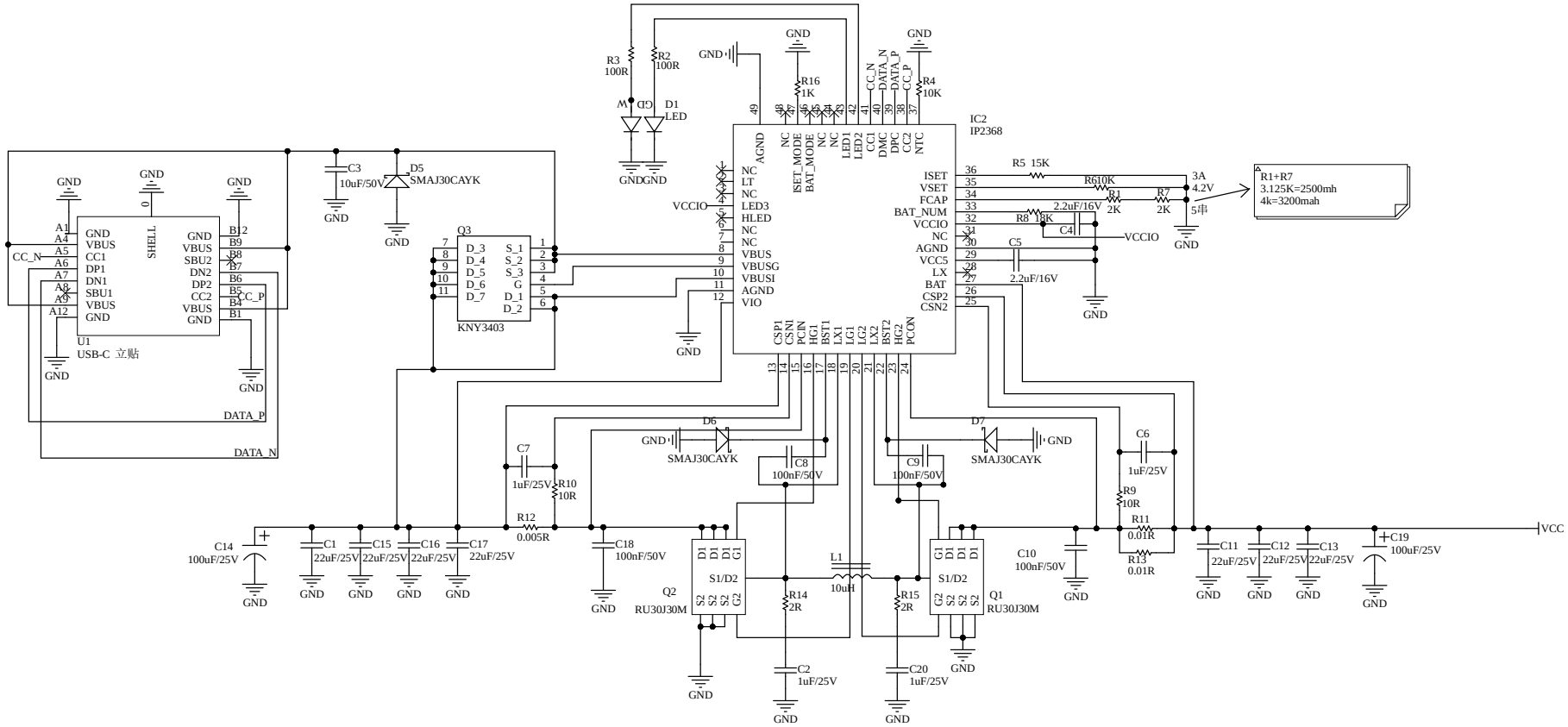

Title	可乐罐充电宝充放电管理板		
Size A3	Number		Revision
Date:	11/23/2022	Sheet of	fbn
File:	E:\可乐罐充电宝\..\Sheet1.SchDoc	Drawn By:	fbn