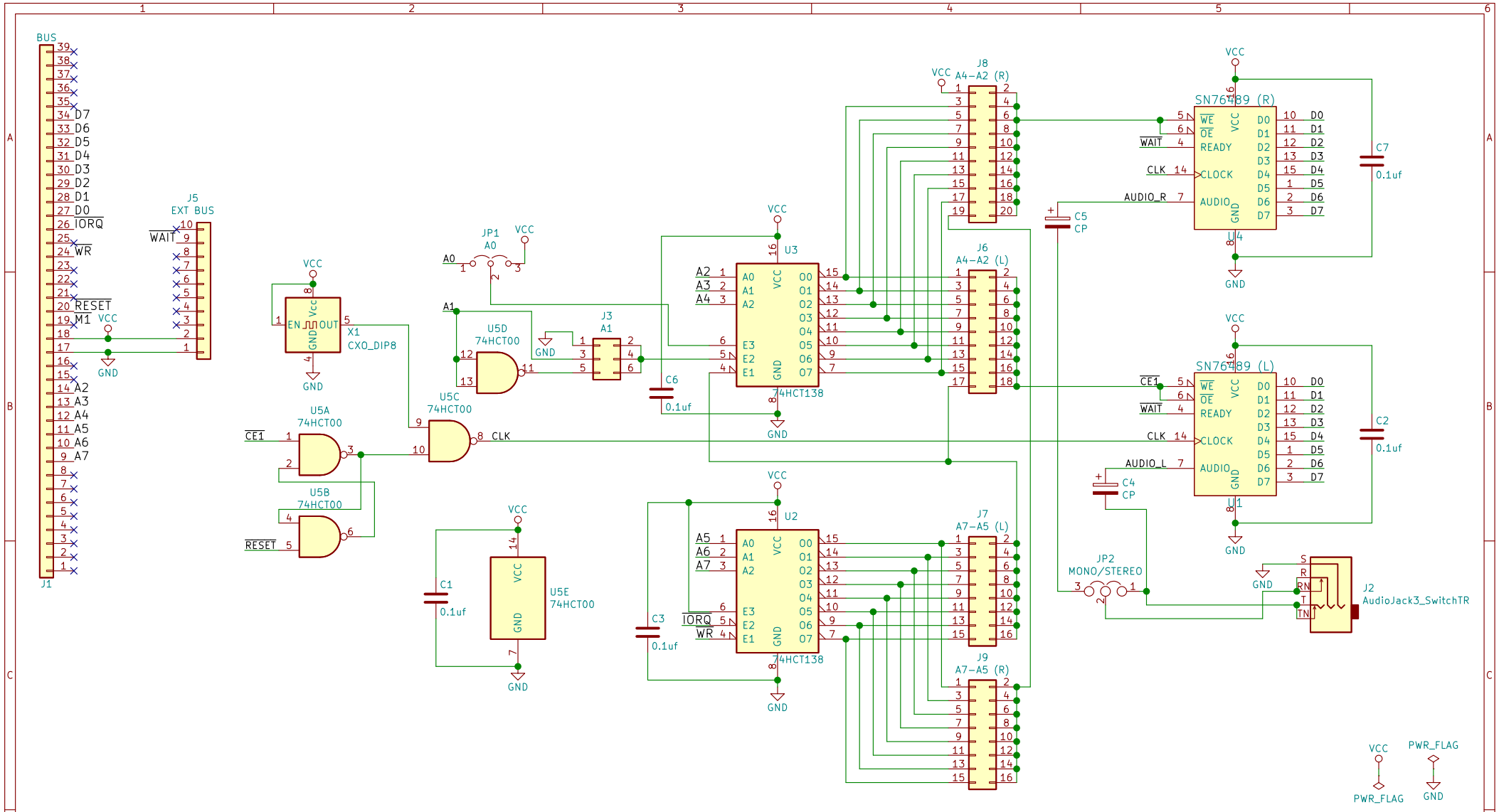

https://github.com/jblang/SN76489

J.B. Langston

Sheet: /

File: SN76489.sch

Title: SN76489 Sound Card for RC2014

Size: A4	Date: 2020-09-20	**Rev: REV3**
KiCad E.D.A. kicad (5.1.5)-3		Id: 1/1