57 Basic timers (TIM6/TIM7)

57.1 TIM6/TIM7 introduction

The basic timers TIM6/TIM7 consist in a 16-bit autoreload counter driven by a programmable prescaler.

They can be used as generic timers for time-base generation.

The basic timer can also be used for triggering the digital-to-analog converter. This is done with the trigger output of the timer.

The timers are completely independent, and do not share any resources.

57.2 TIM6/TIM7 main features

Basic timer (TIM6/TIM7) features include:

- 16-bit autoreload upcounter.
- 16-bit programmable prescaler used to divide (also “on the fly”) the counter clock frequency by any factor between 1 and 65535.
- Synchronization circuit to trigger the DAC.
- Interrupt/DMA generation on the update event: counter overflow.

57.3 TIM6/TIM7 functional description

57.3.1 TIM6/TIM7 block diagram

Figure 722. Basic timer block diagram

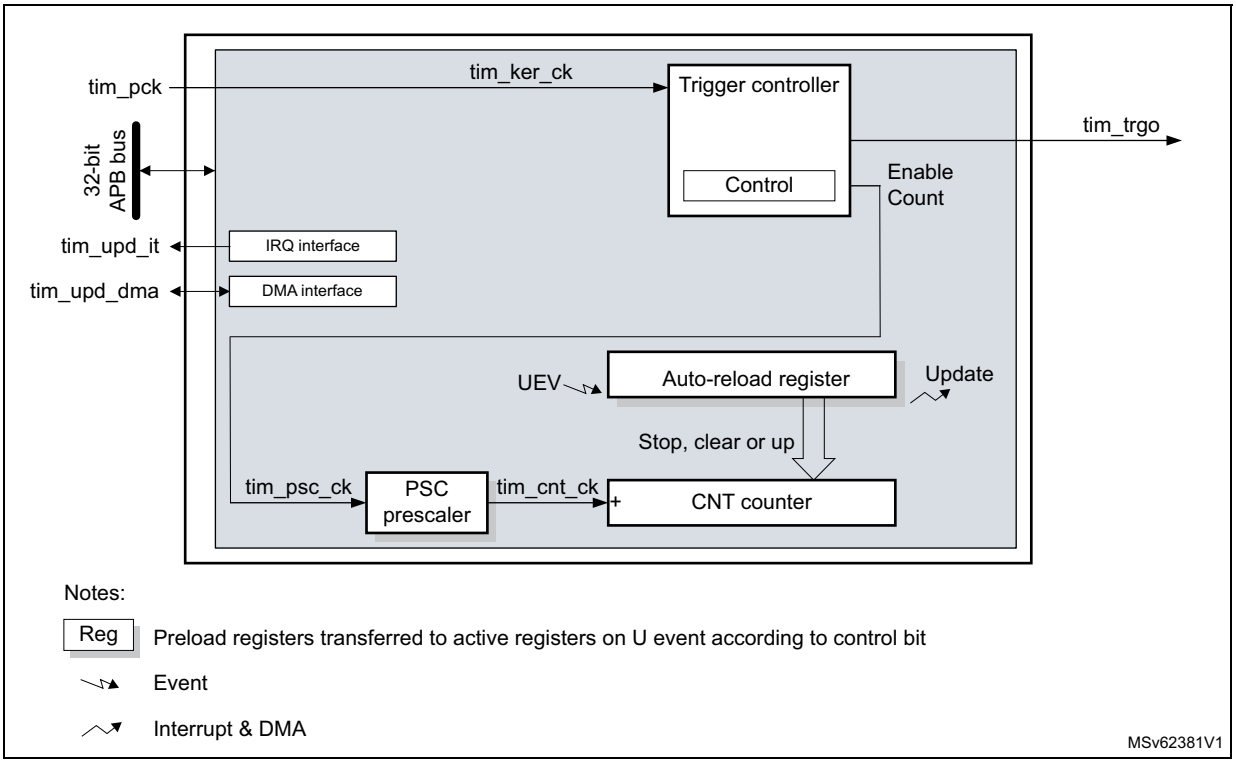

57.3.2 TIM6/TIM7 internal signals

The table in this section summarizes the TIM inputs and outputs.

Table 593. TIM internal input/output signals

Internal signal name	Signal type	Description
tim_pclk	Input	Timer APB clock
tim_ker_ck	Input	Timer kernel clock. This clock must be synchronous with tim_pclk (derived from the same source). The clock ratio tim_ker_ck/tim_pclk must be an integer: 1, 2, 3,..., 16 (maximum value)
tim_trgo	Output	Internal trigger output. This trigger can trigger other on-chip peripherals (DAC).
tim_upd_it	Output	Timer update event interrupt
tim_upd_dma	Output	Timer update dma request

57.3.3 TIM6/TIM7 clocks

The timer bus interface is clocked by the tim_pclk APB clock.

The counter clock tim_ker_ck is connected to the tim_pclk input.

The CEN (in the TIMx_CR1 register) and UG bits (in the TIMx_EGR register) are actual control bits and can be changed only by software (except for UG that remains cleared automatically). As soon as the CEN bit is written to 1, the prescaler is clocked by the internal clock tim_ker_ck.

Figure 723 shows the behavior of the control circuit and the upcounter in normal mode, without prescaler.

Figure 723. Control circuit in normal mode, internal clock divided by 1

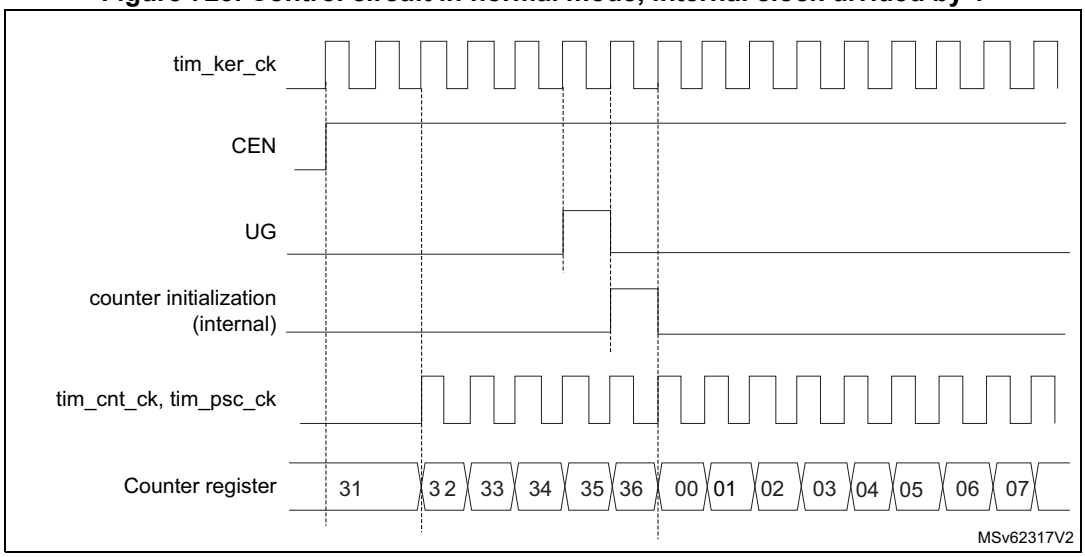

57.3.4 Time-base unit

The main block of the programmable timer is a 16-bit upcounter with its related autoreload register. The counter clock can be divided by a prescaler.

The counter, the autoreload register and the prescaler register can be written or read by software. This is true even when the counter is running.

The time-base unit includes:

- Counter register (TIMx_CNT)
- Prescaler register (TIMx_PSC)
- Auto-Reload register (TIMx_ARR).

The autoreload register is preloaded. The preload register is accessed each time an attempt is made to write or read the autoreload register. The contents of the preload register are transferred into the shadow register permanently or at each update event UEV, depending on the autoreload preload enable bit (ARPE) in the TIMx_CR1 register. The update event is sent when the counter reaches the overflow value and if the UDIS bit equals 0 in the TIMx_CR1 register. It can also be generated by software. The generation of the update event is described in detail for each configuration.

The counter is clocked by the prescaler output tim_cnt_ck, which is enabled only when the counter enable bit (CEN) in the TIMx_CR1 register is set.

Note that the actual counter enable signal tim_cnt_en is set one clock cycle after CEN bit set.

Prescaler description

The prescaler can divide the counter clock frequency by any factor between 1 and 65536. It is based on a 16-bit counter controlled through a 16-bit register (in the TIMx_PSC register). It can be changed on the fly as the TIMx_PSC control register is buffered. The new prescaler ratio is taken into account at the next update event.

Figure 724 and *Figure 725* give some examples of the counter behavior when the prescaler ratio is changed on the fly.

Figure 724. Counter timing diagram with prescaler division change from 1 to 2

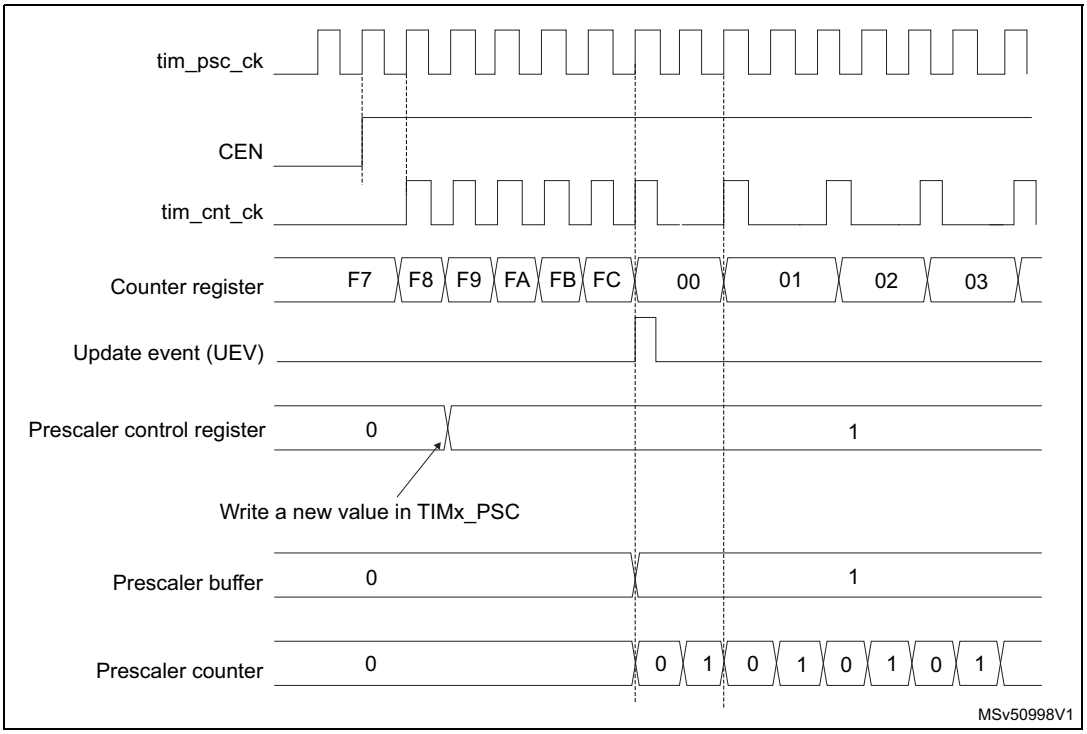

Figure 725. Counter timing diagram with prescaler division change from 1 to 4

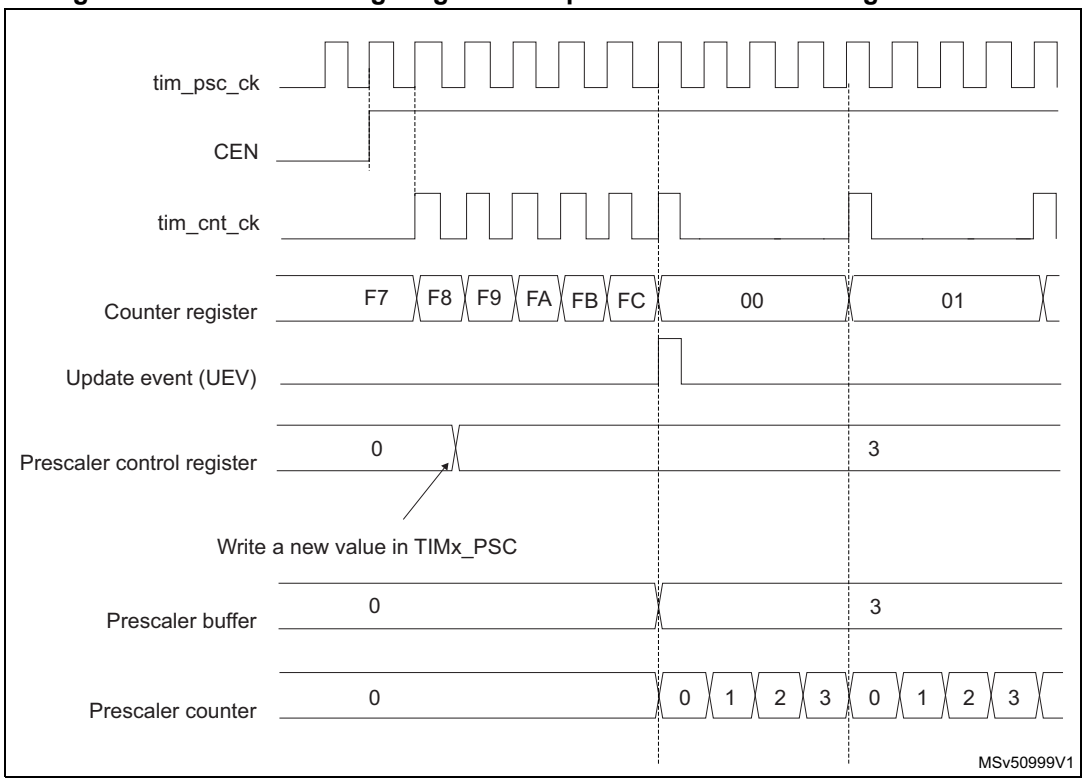

57.3.5 Counting mode

The counter counts from 0 to the autoreload value (contents of the TIMx_ARR register), then restarts from 0 and generates a counter overflow event.

An update event can be generate at each counter overflow or by setting the UG bit in the TIMx_EGR register (by software or by using the slave mode controller).

The UEV event can be disabled by software by setting the UDIS bit in the TIMx_CR1 register. This avoids updating the shadow registers while writing new values into the preload registers. In this way, no update event occurs until the UDIS bit has been written to 0, however, the counter and the prescaler counter both restart from 0 (but the prescale rate does not change). In addition, if the URS (update request selection) bit in the TIMx_CR1 register is set, setting the UG bit generates an update event UEV, but the UIF flag is not set (so no interrupt or DMA request is sent).

When an update event occurs, all the registers are updated and the update flag (UIF bit in the TIMx_SR register) is set (depending on the URS bit):

- The buffer of the prescaler is reloaded with the preload value (contents of the TIMx_PSC register).
- The autoreload shadow register is updated with the preload value (TIMx_ARR).

The following figures show some examples of the counter behavior for different clock frequencies when TIMx_ARR = 0x36.

Figure 726. Counter timing diagram, internal clock divided by 1

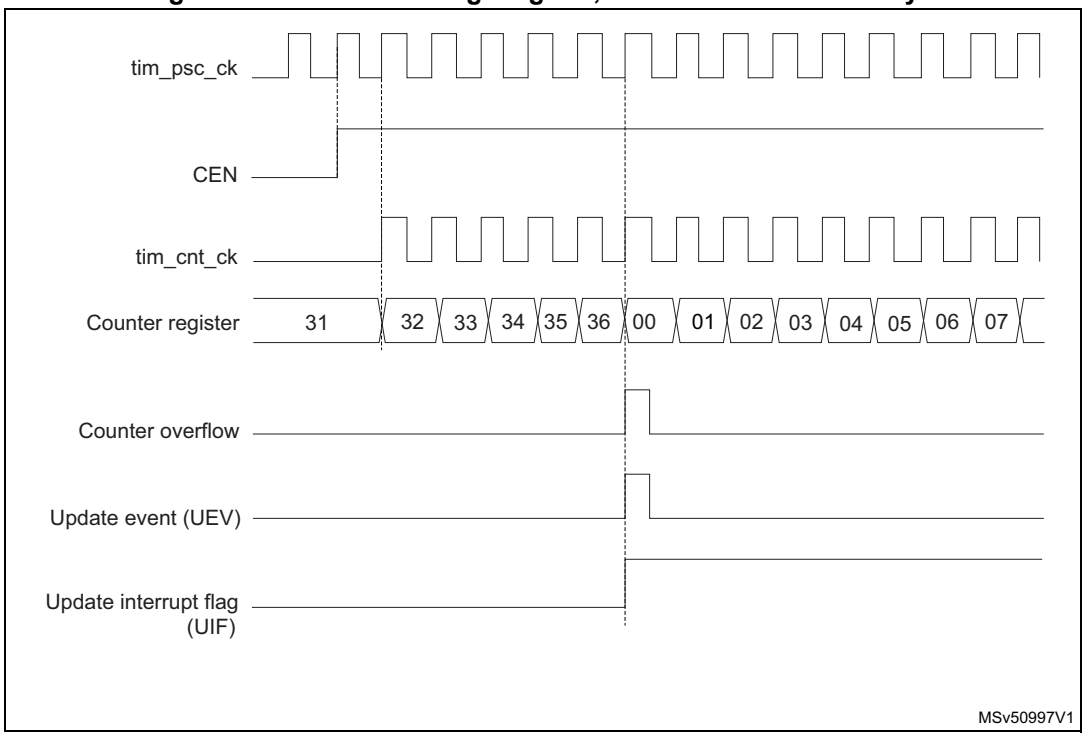

Figure 727. Counter timing diagram, internal clock divided by 2

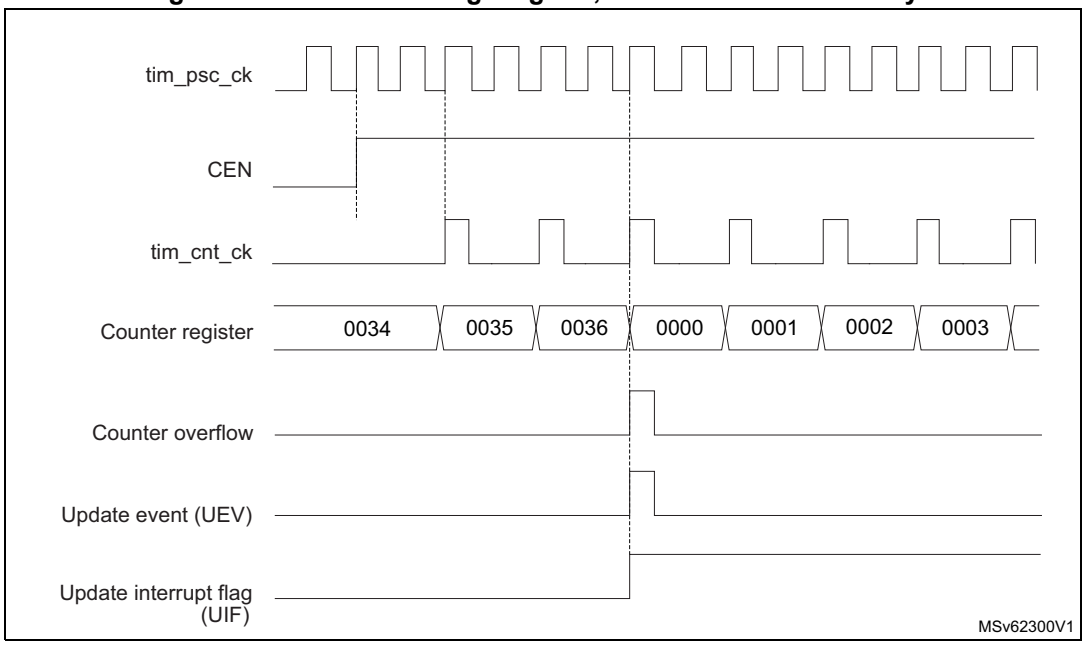

Figure 728. Counter timing diagram, internal clock divided by 4

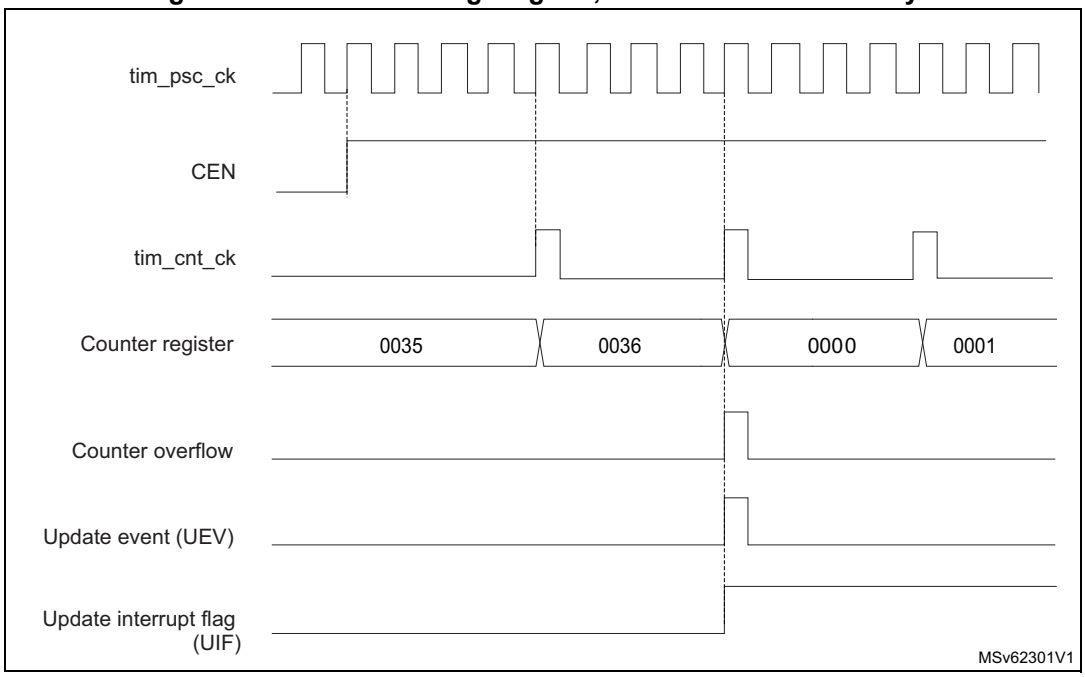

Figure 729. Counter timing diagram, internal clock divided by N

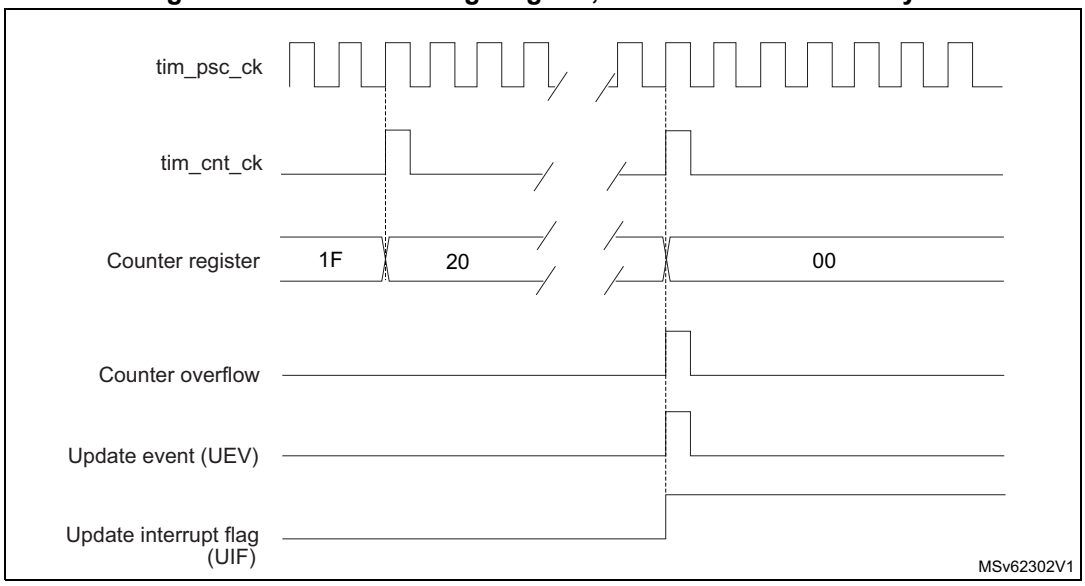

Figure 730. Counter timing diagram, update event when ARPE = 0 (TIMx_ARR not preloaded)

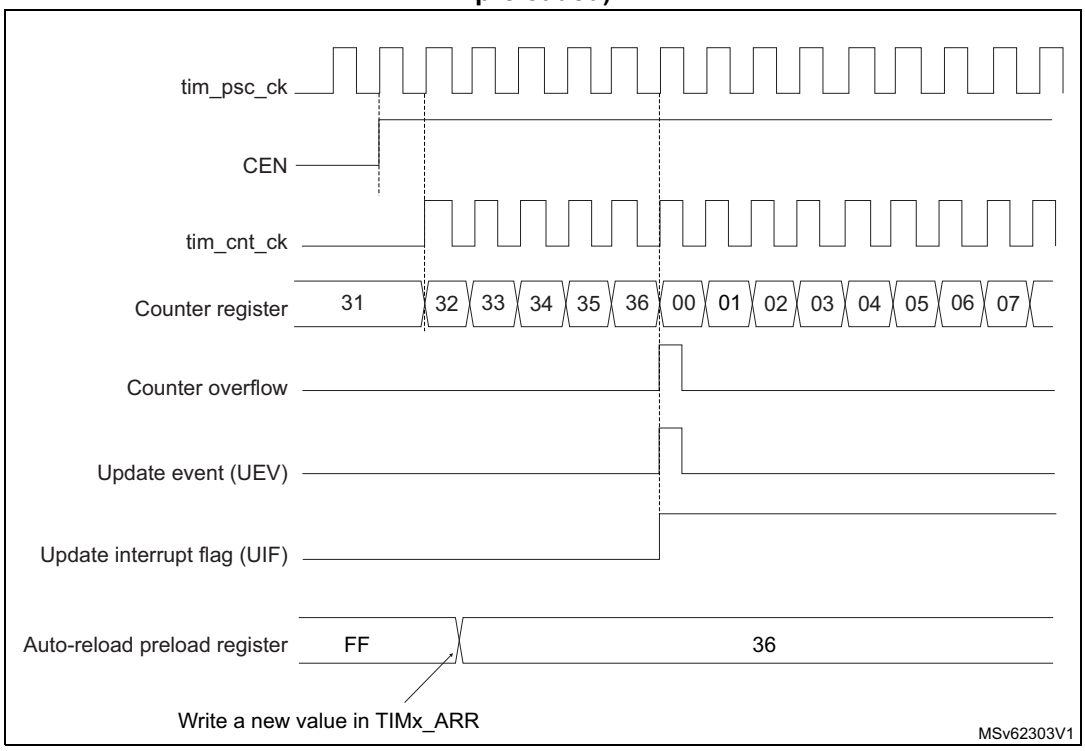

Figure 731. Counter timing diagram, update event when ARPE = 1 (TIMx_ARR preloaded)

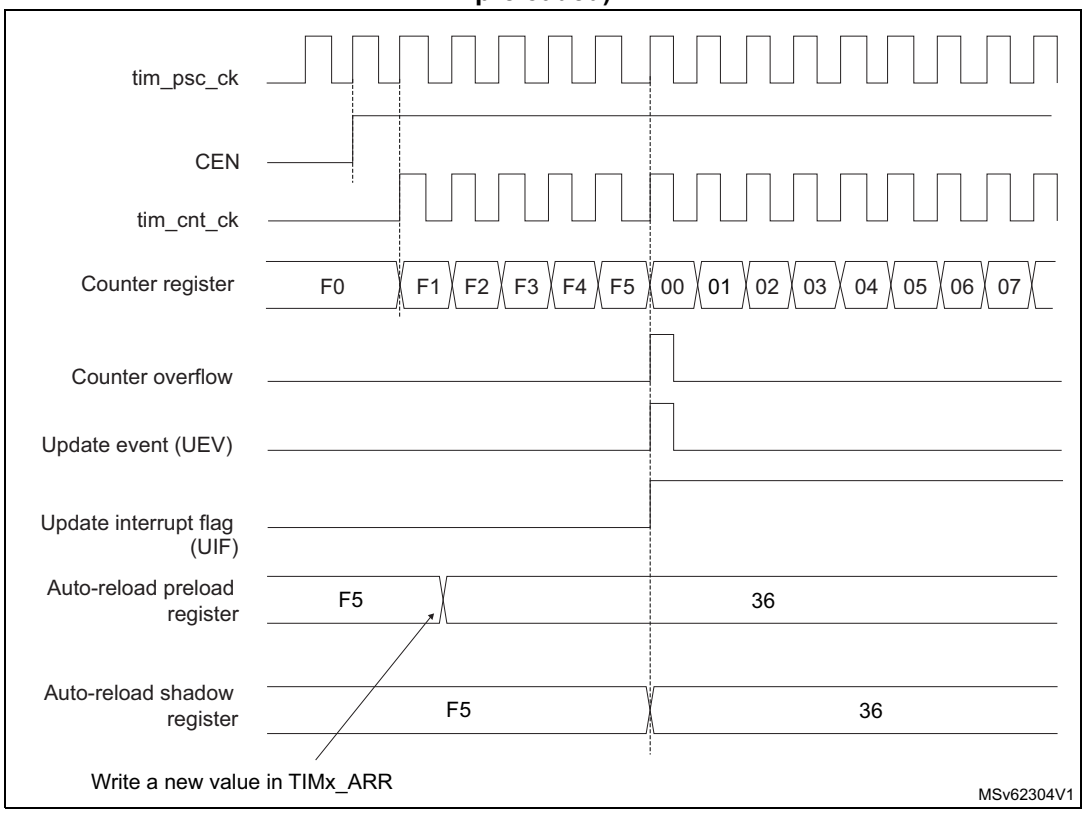

Dithering mode

The time base effective resolution can be increased by enabling the dithering mode, using the DITHEN bit in the TIMx_CR1 register. This affects the way the TIMx_ARR is behaving, and is useful for adjusting the average counter period when the timer is used as a trigger (typically for a DAC).

The operating principle is to have the actual ARR value slightly changed (adding or not one timer clock period) over 16 consecutive counting periods, with predefined patterns. This allows a 16-fold resolution increase, considering the average counting period.

Figure 732 presents the dithering principle applied to four consecutive counting periods.

Figure 732. Dithering principle

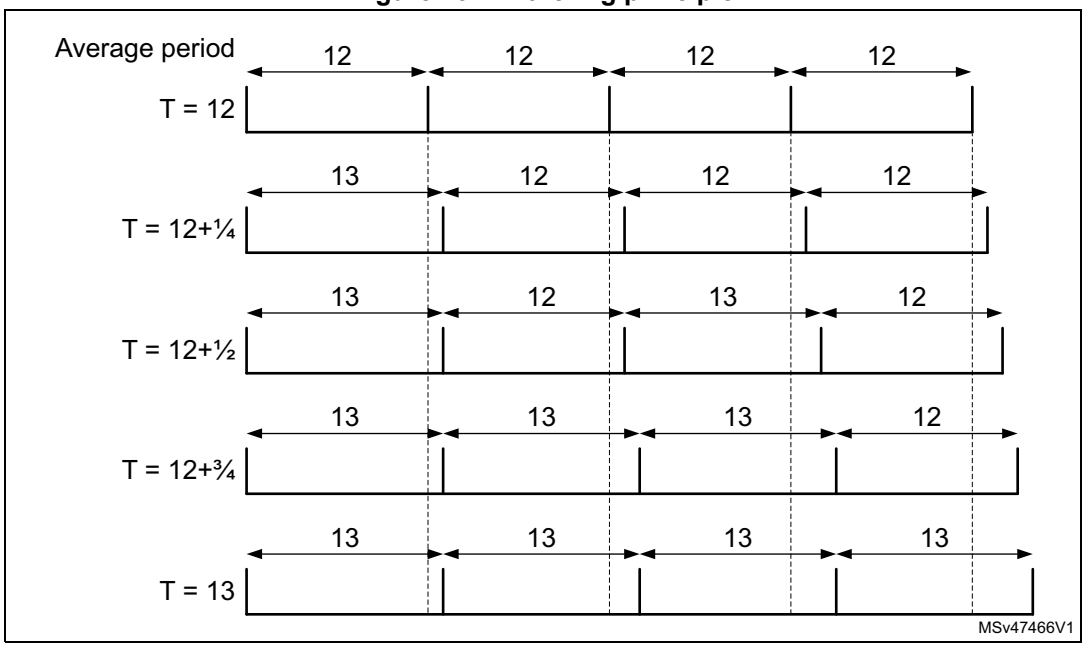

When the dithering mode is enabled, the register coding is changed as follows (see *Figure 733* for example):

- The four LSBs are coding for the enhanced resolution part (fractional part).
- The MSBs are left-shifted to the bits 19:4 and are coding for the base value.

Note: The following sequence must be followed when resetting the DITHEN bit:
1. CEN and ARPE bits must be reset
2. The ARR[3:0] bits must be reset
3. The DITHEN bit must be reset
4. The CEN bit can be set (eventually with ARPE = 1).

Figure 733. Data format and register coding in dithering mode

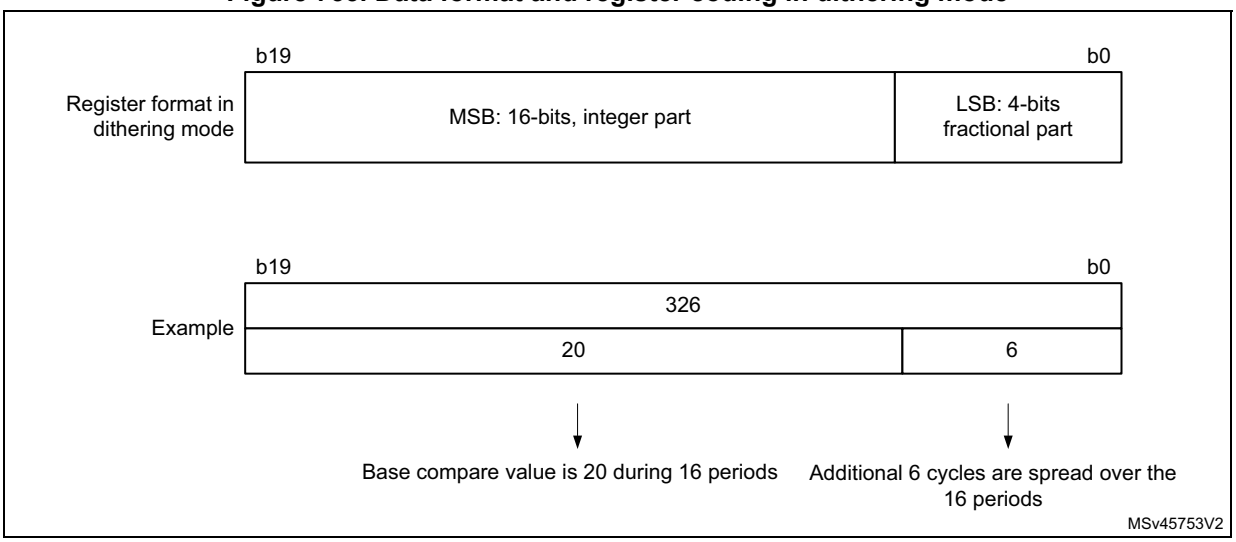

The minimum frequency is given by the following formula:

$$\text{Resolution} = \frac{F_{Tim}}{F_{pwm}} \Rightarrow F_{pwmMin} = \frac{F_{Tim}}{Max_{Resolution}}$$

$$\text{Dithering mode disabled: } F_{pwmMin} = \frac{F_{Tim}}{65536}$$

$$\text{Dithering mode enabled: } F_{pwmMin} = \frac{F_{Tim}}{65535 + \frac{15}{16}}$$

Note: The maximum TIMx_ARR value is limited to 0xFFFEF in dithering mode (corresponds to 65534 for the integer part and 15 for the dithered part).

As shown on *Figure 734*, the dithering mode is used to increase the PWM resolution whatever the PWM frequency.

Figure 734. F_{Cnt} resolution vs frequency

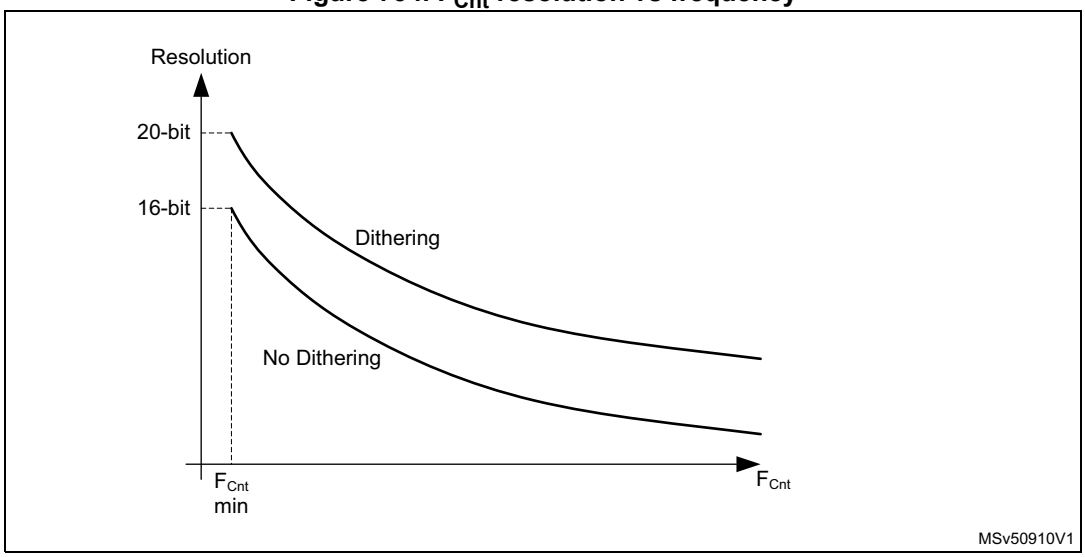

The period changes are spread over 16 consecutive periods, as described in *Figure 735*.

Figure 735. PWM dithering pattern

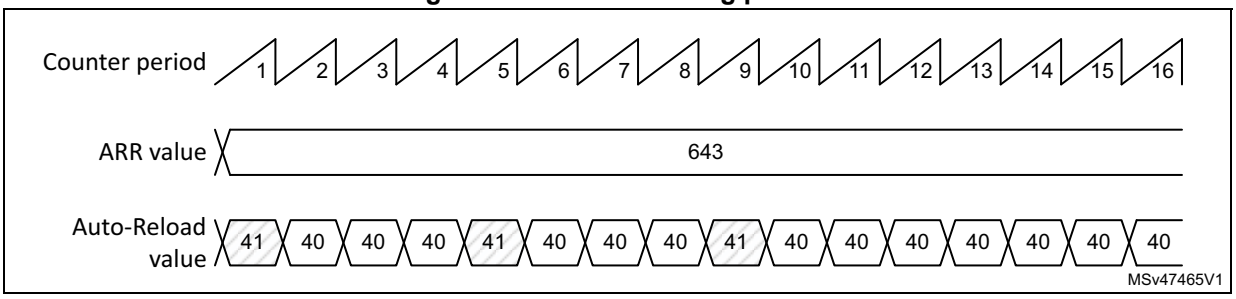

The autoreload and compare values increments are spread following the specific patterns described in *Table 594*. The dithering sequence is done to have increments distributed as evenly as possible and minimize the overall ripple.

Table 594. TIMx_ARR register change dithering pattern

-	PWM period															
LSB value	**1**	**2**	**3**	**4**	**5**	**6**	**7**	**8**	**9**	**10**	**11**	**12**	**13**	**14**	**15**	**16**
0000	-	-	-	-	-	-	-	-	-	-	-	-	-	-	-	-
0001	+1	-	-	-	-	-	-	-	-	-	-	-	-	-	-	-
0010	+1	-	-	-	-	-	-	-	+1	-	-	-	-	-	-	-
0011	+1	-	-	-	+1	-	-	-	+1	-	-	-	-	-	-	-
0100	+1	-	-	-	+1	-	-	-	+1	-	-	-	+1	-	-	-
0101	+1	-	+1	-	+1	-	-	-	+1	-	-	-	+1	-	-	-
0110	+1	-	+1	-	+1	-	-	-	+1	-	+1	-	+1	-	-	-
0111	+1	-	+1	-	+1	-	+1	-	+1	-	+1	-	+1	-	-	-
1000	+1	-	+1	-	+1	-	+1	-	+1	-	+1	-	+1	-	+1	-
1001	+1	+1	+1	-	+1	-	+1	-	+1	-	+1	-	+1	-	+1	-
1010	+1	+1	+1	-	+1	-	+1	-	+1	+1	+1	-	+1	-	+1	-
1011	+1	+1	+1	-	+1	+1	+1	-	+1	+1	+1	-	+1	-	+1	-
1100	+1	+1	+1	-	+1	+1	+1	-	+1	+1	+1	-	+1	+1	+1	-
1101	+1	+1	+1	+1	+1	+1	+1	-	+1	+1	+1	-	+1	+1	+1	-
1110	+1	+1	+1	+1	+1	+1	+1	-	+1	+1	+1	+1	+1	+1	+1	-
1111	+1	+1	+1	+1	+1	+1	+1	+1	+1	+1	+1	+1	+1	+1	+1	-

57.3.6 UIF bit remapping

The IUFREMAP bit in the TIMx_CR1 register forces a continuous copy of the update interrupt flag UIF into the timer counter register's bit 31 (TIMxCNT[31]). This is used to atomically read both the counter value and a potential roll-over condition signaled by the UIFCPY flag. In particular cases, it can ease the calculations by avoiding race conditions caused for instance by a processing shared between a background task (counter reading) and an interrupt (update interrupt).

There is no latency between the assertions of the UIF and UIFCPY flags.

57.3.7 ADC triggers

The timer can generate an ADC triggering event with various internal signals, such as reset, enable or compare events.

Note: The clock of the slave peripherals (such as timer, ADC) receiving the tim_trgo signal must be enabled prior to receiving events from the master timer, and the clock frequency (prescaler) must not be changed on-the-fly while triggers are received from the master timer.

57.3.8 TIM6/TIM7 DMA requests

The TIM6/TIM7 can generate a single DMA request, as shown in *Table 595*.

Table 595. DMA request

DMA acronym	DMA request	Enable control bit
tim_upd_dma	Update	UDE

57.3.9 Debug mode

When the microcontroller enters debug mode (Cortex®-M33 core halted), the TIMx counter can either continue to work normally or be stopped.

The behavior in debug mode can be programmed with a dedicated configuration bit per timer in the Debug support (DBG) module.

For more details, refer to section Debug support (DBG).

57.3.10 TIM6/TIM7 low-power modes

Table 596. Effect of low-power modes on TIM6/TIM7

Mode	Description
Sleep	No effect, peripheral is active. The interrupts can cause the device to exit from Sleep mode.
Stop	The timer operation is stopped and the register content is kept. No interrupt can be generated.
Standby	The timer is powered-down and must be reinitialized after exiting the Standby mode.

57.3.11 TIM6/TIM7 interrupts

The TIM6/TIM7 can generate a single interrupt, as shown in *Table 597*.

Table 597. Interrupt request

Interrupt acronym	Interrupt event	Event flag	Enable control bit	Interrupt clear method	Exit from Sleep mode	Exit from Stop and Standby mode
TIM6 TIM7	Update	UIF	UIE	write 0 in UIF	Yes	No

57.4 TIM6/TIM7 registers

Refer to *Section 1.2* for a list of abbreviations used in register descriptions.

The peripheral registers can be accessed by half-words (16-bit) or words (32-bit).

57.4.1 TIMx control register 1 (TIMx_CR1)(x = 6 to 7)

Address offset: 0x00

Reset value: 0x0000

15	14	13	12	11	10	9	8	7	6	5	4	3	2	1	0
Res.	Res.	Res.	DITH EN	UIFRE MAP	Res.	Res.	Res.	ARPE	Res.	Res.	Res.	OPM	URS	UDIS	CEN
			rw	rw				rw				rw	rw	rw	rw

Bits 15:13 Reserved, must be kept at reset value.

Bit 12 **DITHEN**: Dithering enable
0: Dithering disabled
1: Dithering enabled
Note: The DITHEN bit can only be modified when CEN bit is reset.

Bit 11 **UIFREMAP**: UIF status bit remapping
0: No remapping. UIF status bit is not copied to TIMx_CNT register bit 31.
1: Remapping enabled. UIF status bit is copied to TIMx_CNT register bit 31.

Bits 10:8 Reserved, must be kept at reset value.

Bit 7 **ARPE**: Auto-reload preload enable
0: TIMx_ARR register is not buffered.
1: TIMx_ARR register is buffered.

Bits 6:4 Reserved, must be kept at reset value.

Bit 3 **OPM**: One-pulse mode
0: Counter is not stopped at update event
1: Counter stops counting at the next update event (clearing the CEN bit).

Bit 2 **URS**: Update request source

This bit is set and cleared by software to select the UEV event sources.

0: Any of the following events generates an update interrupt or DMA request if enabled. These events can be:

- Counter overflow/underflow
- Setting the UG bit
- Update generation through the slave mode controller

1: Only counter overflow/underflow generates an update interrupt or DMA request if enabled.

Bit 1 **UDIS**: Update disable

This bit is set and cleared by software to enable/disable UEV event generation.

0: UEV enabled. The Update (UEV) event is generated by one of the following events:

- Counter overflow/underflow
- Setting the UG bit
- Update generation through the slave mode controller

Buffered registers are then loaded with their preload values.

1: UEV disabled. The Update event is not generated, shadow registers keep their value (ARR, PSC). However the counter and the prescaler are reinitialized if the UG bit is set or if a hardware reset is received from the slave mode controller.

Bit 0 **CEN**: Counter enable

0: Counter disabled

1: Counter enabled

CEN is cleared automatically in one-pulse mode, when an update event occurs.

57.4.2 TIMx control register 2 (TIMx_CR2)(x = 6 to 7)

Address offset: 0x04

Reset value: 0x0000

15	14	13	12	11	10	9	8	7	6	5	4	3	2	1	0
Res.	Res.	Res.	Res.	Res.	Res.	Res.	Res.	Res.	MMS[2:0]			Res.	Res.	Res.	Res.
									rw	rw	rw				

Bits 15:7 Reserved, must be kept at reset value.

Bits 6:4 **MMS[2:0]**: Master mode selection

These bits are used to select the information to be sent in master mode to slave timers for synchronization (TRGO). The combination is as follows:

000:**Reset** - the UG bit from the TIMx_EGR register is used as a trigger output (tim_trgo).

001:**Enable** - the Counter enable signal, tim_cnt_en, is used as a trigger output (tim_trgo). It is useful to start several timers at the same time or to control a window in which a slave timer is enabled. The Counter Enable signal is generated when the CEN control bit is written.

010:**Update** - The update event is selected as a trigger output (tim_trgo). For instance a master timer can then be used as a prescaler for a slave timer.

Note: The clock of the slave timer or he peripheral receiving the tim_trgo must be enabled prior to receive events from the master timer, and must not be changed on-the-fly while triggers are received from the master timer.

Bits 3:0 Reserved, must be kept at reset value.

57.4.3 TIMx DMA/Interrupt enable register (TIMx_DIER)(x = 6 to 7)

Address offset: 0x0C

Reset value: 0x0000

15	14	13	12	11	10	9	8	7	6	5	4	3	2	1	0
Res.	Res.	Res.	Res.	Res.	Res.	Res.	UDE	Res.	Res.	Res.	Res.	Res.	Res.	Res.	UIE
							rw								rw

Bits 15:9 Reserved, must be kept at reset value.

Bit 8 **UDE**: Update DMA request enable

0: Update DMA request disabled.
1: Update DMA request enabled.

Bits 7:1 Reserved, must be kept at reset value.

Bit 0 **UIE**: Update interrupt enable

0: Update interrupt disabled.
1: Update interrupt enabled.

57.4.4 TIMx status register (TIMx_SR)(x = 6 to 7)

Address offset: 0x10

Reset value: 0x0000

15	14	13	12	11	10	9	8	7	6	5	4	3	2	1	0
Res.	Res.	Res.	Res.	Res.	Res.	Res.	Res.	Res.	Res.	Res.	Res.	Res.	Res.	Res.	UIF
															rc_w0

Bits 15:1 Reserved, must be kept at reset value.

Bit 0 **UIF**: Update interrupt flag

This bit is set by hardware on an update event. It is cleared by software.

0: No update occurred.

1: Update interrupt pending. This bit is set by hardware when the registers are updated:

–On counter overflow if UDIS = 0 in the TIMx_CR1 register.

–When CNT is reinitialized by software using the UG bit in the TIMx_EGR register, if URS = 0 and UDIS = 0 in the TIMx_CR1 register.

57.4.5 TIMx event generation register (TIMx_EGR)(x = 6 to 7)

Address offset: 0x14

Reset value: 0x0000

15	14	13	12	11	10	9	8	7	6	5	4	3	2	1	0
Res.	Res.	Res.	Res.	Res.	Res.	Res.	Res.	Res.	Res.	Res.	Res.	Res.	Res.	Res.	UG
															w

Bits 15:1 Reserved, must be kept at reset value.

Bit 0 **UG**: Update generation

This bit can be set by software, it is automatically cleared by hardware.

0: No action.

1: Re-initializes the timer counter and generates an update of the registers. Note that the prescaler counter is cleared too (but the prescaler ratio is not affected).

57.4.6 TIMx counter (TIMx_CNT)(x = 6 to 7)

Address offset: 0x24

Reset value: 0x0000 0000

31	30	29	28	27	26	25	24	23	22	21	20	19	18	17	16
UIF CPY	Res.	Res.	Res.	Res.	Res.	Res.	Res.	Res.	Res.	Res.	Res.	Res.	Res.	Res.	Res.
r															

15	14	13	12	11	10	9	8	7	6	5	4	3	2	1	0
CNT[15:0]															
rw	rw	rw	rw	rw	rw	rw	rw	rw	rw	rw	rw	rw	rw	rw	rw

Bit 31 **UIFCPY**: UIF copy

This bit is a read-only copy of the UIF bit of the TIMx_ISR register. If the UIFREMAP bit in TIMx_CR1 is reset, bit 31 is reserved and read as 0.

Bits 30:16 Reserved, must be kept at reset value.

Bits 15:0 **CNT[15:0]**: Counter value

Non-dithering mode (DITHEN = 0)

The register holds the counter value.

Dithering mode (DITHEN = 1)

The register only holds the non-dithered part in CNT[15:0]. The fractional part is not available.

57.4.7 TIMx prescaler (TIMx_PSC)(x = 6 to 7)

Address offset: 0x28

Reset value: 0x0000

15	14	13	12	11	10	9	8	7	6	5	4	3	2	1	0
PSC[15:0]															
rw	rw	rw	rw	rw	rw	rw	rw	rw	rw	rw	rw	rw	rw	rw	rw

Bits 15:0 **PSC[15:0]**: Prescaler value

The counter clock frequency $f_{tim_cnt_ck}$ is equal to $f_{tim_psc_ck}$ / (PSC[15:0] + 1).

PSC contains the value to be loaded into the active prescaler register at each update event. (including when the counter is cleared through UG bit of TIMx_EGR register.

57.4.8 TIMx autoreload register (TIMx_ARR)(x = 6 to 7)

Address offset: 0x2C

Reset value: 0x0000 FFFF

31	30	29	28	27	26	25	24	23	22	21	20	19	18	17	16
Res.	Res.	Res.	Res.	Res.	Res.	Res.	Res.	Res.	Res.	Res.	Res.	ARR[19:16]			
												rw	rw	rw	rw
15	14	13	12	11	10	9	8	7	6	5	4	3	2	1	0
ARR[15:0]															
rw	rw	rw	rw	rw	rw	rw	rw	rw	rw	rw	rw	rw	rw	rw	rw

Bits 31:20 Reserved, must be kept at reset value.

Bits 19:0 **ARR[19:0]**: Auto-reload value

ARR is the value to be loaded into the actual auto-reload register.

Refer to *Section 57.3.4: Time-base unit* for more details about ARR update and behavior.

The counter is blocked while the auto-reload value is null.

Non-dithering mode (DITHEN = 0)

The register holds the auto-reload value in ARR[15:0]. The ARR[19:16] bits are reserved.

Dithering mode (DITHEN = 1)

The register holds the integer part in ARR[19:4]. The ARR[3:0] bitfield contains the dithered part.

57.4.9 TIMx register map

TIMx registers are mapped as 16-bit addressable registers as described in the table below:

Table 598. TIMx register map and reset values

Offset	Register name	31	30	29	28	27	26	25	24	23	22	21	20	19	18	17	16	15	14	13	12	11	10	9	8	7	6	5	4	3	2	1	0
0x00	**TIMx_CR1**	Res.	Res.	Res.	Res.	Res.	Res.	Res.	Res.	Res.	Res.	Res.	Res.	Res.	Res.	Res.	Res.	Res.	Res.	Res.	DITHEN	UIFREMA	Res.	Res.	Res.	ARPE	Res.	Res.	Res.	OPM	URS	UDIS	CEN
	Reset value																				0	0				0				0	0	0	0
0x04	**TIMx_CR2**	Res.	Res.	Res.	Res.	Res.	Res.	Res.	Res.	Res.	Res.	Res.	Res.	Res.	Res.	Res.	Res.	Res.	Res.	Res.	Res.	Res.	Res.	Res.	Res.	Res.	MMS [2:0]			Res.	Res.	Res.	Res.
	Reset value																										0	0	0				
0x08	Reserved																																
0x0C	**TIMx_DIER**	Res.	Res.	Res.	Res.	Res.	Res.	Res.	Res.	Res.	Res.	Res.	Res.	Res.	Res.	Res.	Res.	Res.	Res.	Res.	Res.	Res.	Res.	Res.	UDE	Res.	Res.	Res.	Res.	Res.	Res.	Res.	UIE
	Reset value																								0								0
0x10	**TIMx_SR**	Res.	Res.	Res.	Res.	Res.	Res.	Res.	Res.	Res.	Res.	Res.	Res.	Res.	Res.	Res.	Res.	Res.	Res.	Res.	Res.	Res.	Res.	Res.	Res.	Res.	Res.	Res.	Res.	Res.	Res.	Res.	UIF
	Reset value																																0
0x14	**TIMx_EGR**	Res.	Res.	Res.	Res.	Res.	Res.	Res.	Res.	Res.	Res.	Res.	Res.	Res.	Res.	Res.	Res.	Res.	Res.	Res.	Res.	Res.	Res.	Res.	Res.	Res.	Res.	Res.	Res.	Res.	Res.	Res.	UG
	Reset value																																0
0x18-0x20	Reserved																																
0x24	**TIMx_CNT**	UIFCPY or Res.	Res.	Res.	Res.	Res.	Res.	Res.	Res.	Res.	Res.	Res.	Res.	Res.	Res.	Res.	Res.	CNT[15:0]															
	Reset value	0																0	0	0	0	0	0	0	0	0	0	0	0	0	0	0	0
0x28	**TIMx_PSC**	Res.	Res.	Res.	Res.	Res.	Res.	Res.	Res.	Res.	Res.	Res.	Res.	Res.	Res.	Res.	Res.	PSC[15:0]															
	Reset value																	0	0	0	0	0	0	0	0	0	0	0	0	0	0	0	0
0x2C	**TIMx_ARR**	Res.	Res.	Res.	Res.	Res.	Res.	Res.	Res.	Res.	Res.	Res.	Res.	ARR[19:0]																			
	Reset value													0	0	0	0	1	1	1	1	1	1	1	1	1	1	1	1	1	1	1	1

Refer to *Section 2.3* for the register boundary addresses.