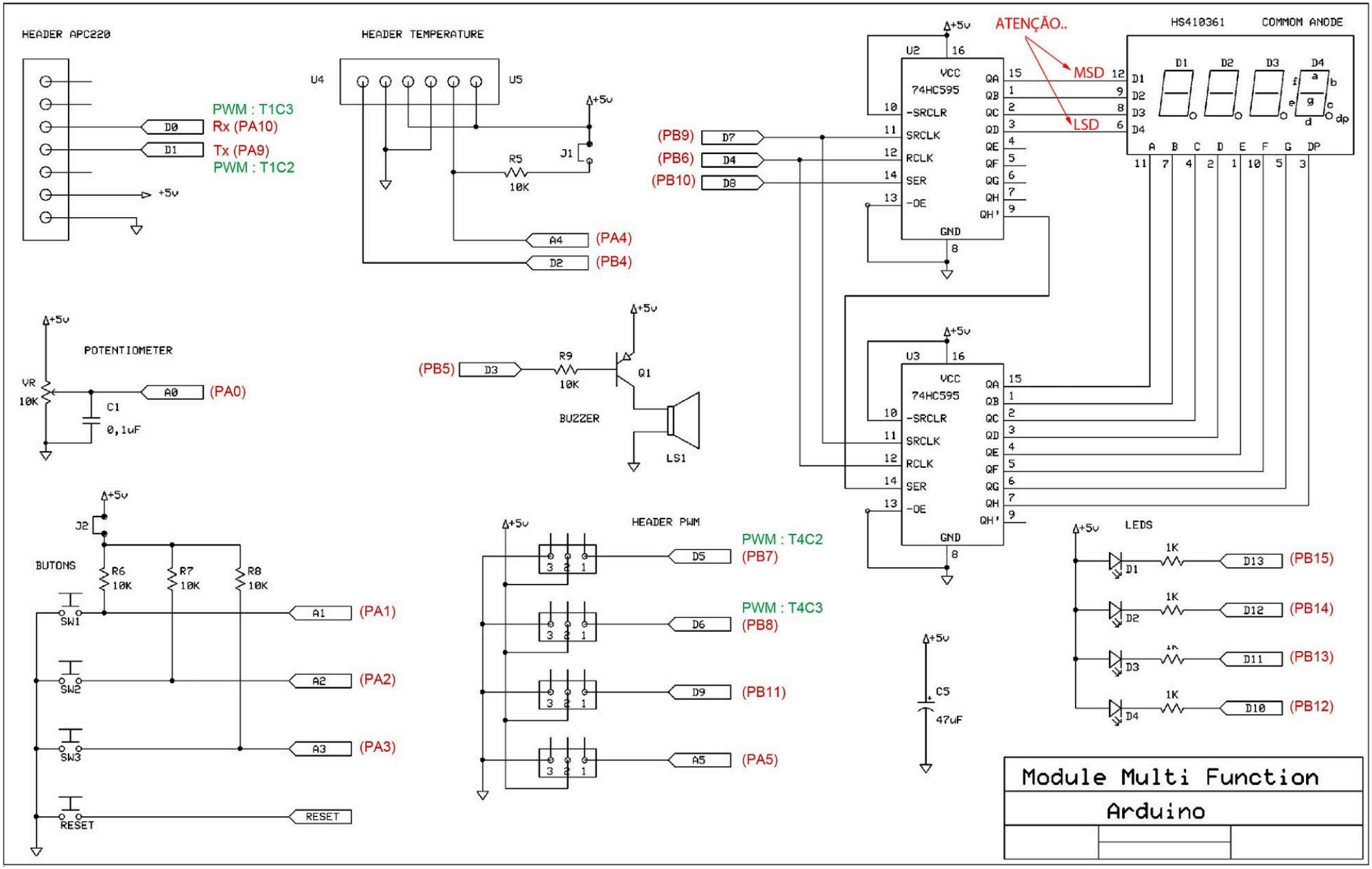
HEADER APC220
D0
D1
+5v
PWM : T1C3
Rx (PA10)
Tx (PA9)
PWM : T1C2
HEADER TEMPERATURE
U4
U5
+5v
J1
R5
10K
A4
(PA4)
D2
(PB4)
ATENÇÃO..
MSD
LSD
HS410361
COMMOM ANODE
U2
VCC
74HC595
-SRCLR
SRCLK
RCLK
SER
-OE
GND
QA
QB
QC
QD
QE
QF
QG
QH
QH'
(PB9)
D7
(PB6)
D4
(PB10)
D8
U3
POTENTIOMETER
VR
10K
A0
(PA0)
C1
0,1uF
(PB5)
D3
R9
10K
Q1
BUZZER
LS1
J2
BUTONS
R6
10K
R7
10K
R8
10K
SW1
SW2
SW3
RESET
A1
(PA1)
A2
(PA2)
A3
(PA3)
HEADER PWM
D5
PWM : T4C2
(PB7)
D6
PWM : T4C3
(PB8)
D9
(PB11)
A5
(PA5)
C5
47uF
LEDS
1K
D13
(PB15)
D12
(PB14)
D11
(PB13)
D10
(PB12)
Module Multi Function
Arduino