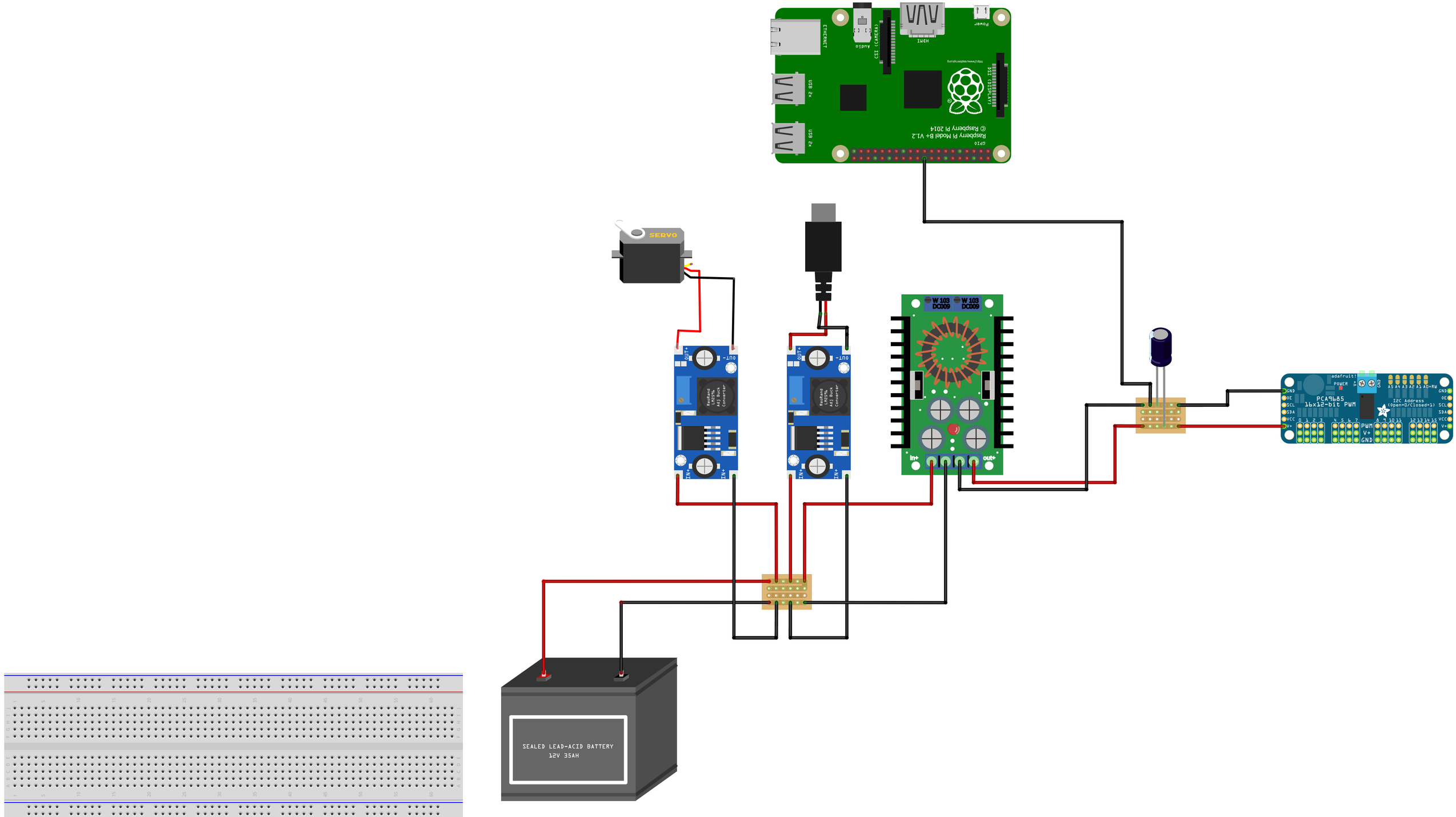
Raspberry Pi Model B+ V1.2
© Raspberry Pi 2014
GPIO
USB x2
USB x2
ETHERNET
Audio
CSI (CAMERA)
HDMI
Power
DSI (DISPLAY)
http://www.raspberrypi.org
SERVO
W 103
DC009
W 103
DC009
in+
out+
OUT+
OUT-
IN+
IN-
Boost and Buck Adj Buck Converter
adafruit
POWER
PCA9685
16x12-bit PWM
I2C Address
(Open=0/Closed=1)
GND
OE
SCL
SDA
VCC
V+
PWM
SEALED LEAD-ACID BATTERY
12V 35AH
fritzing