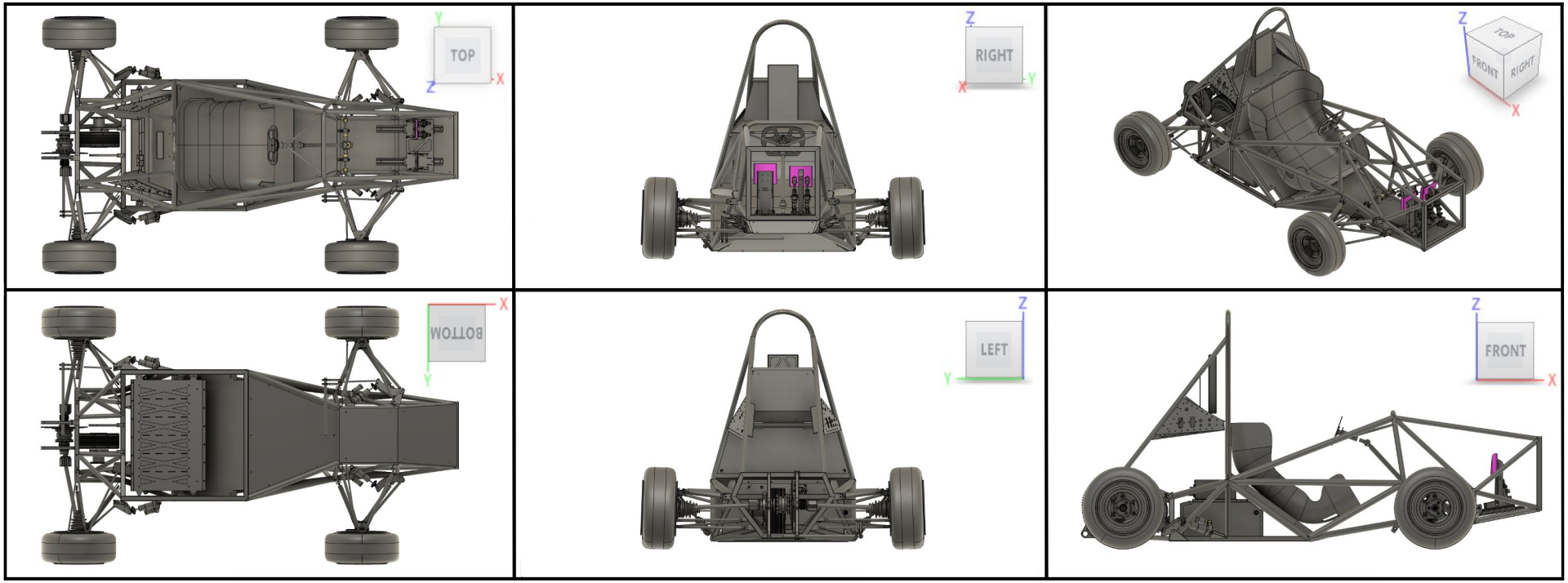
TOP
RIGHT
TOP
FRONT
RIGHT
BOTTOM
LEFT
FRONT

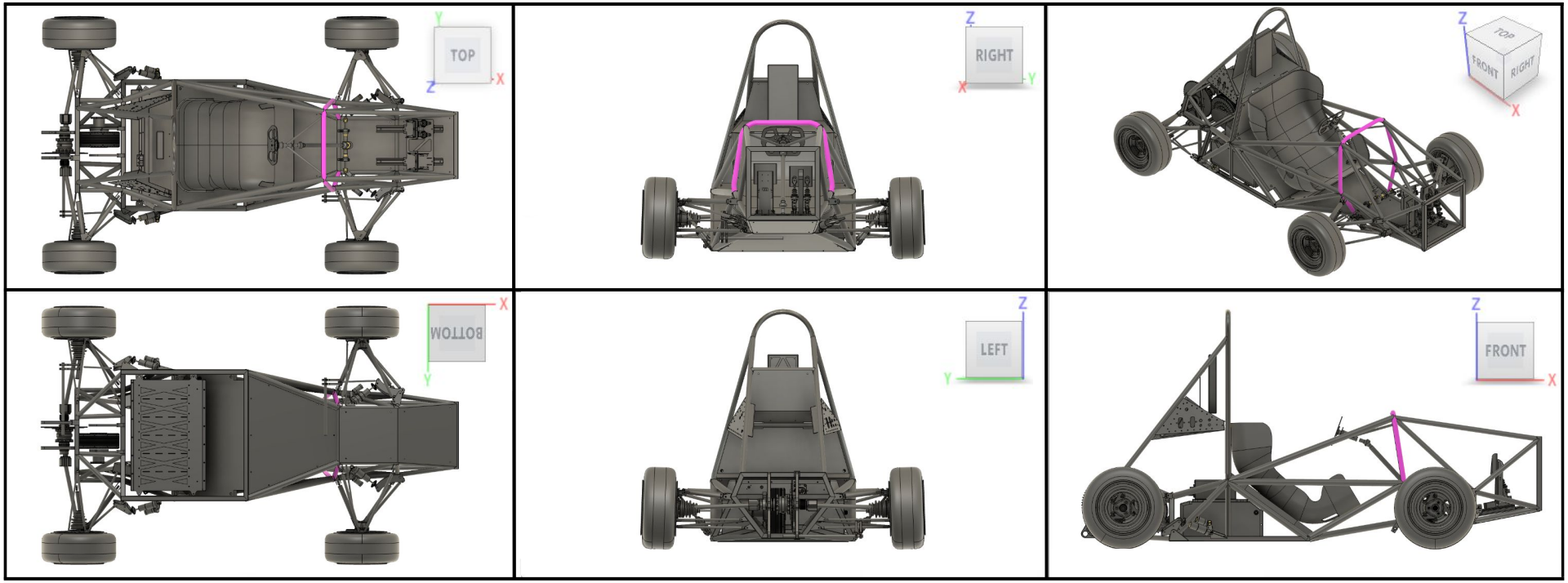
TOP
RIGHT
TOP
FRONT
RIGHT
BOTTOM
LEFT
FRONT

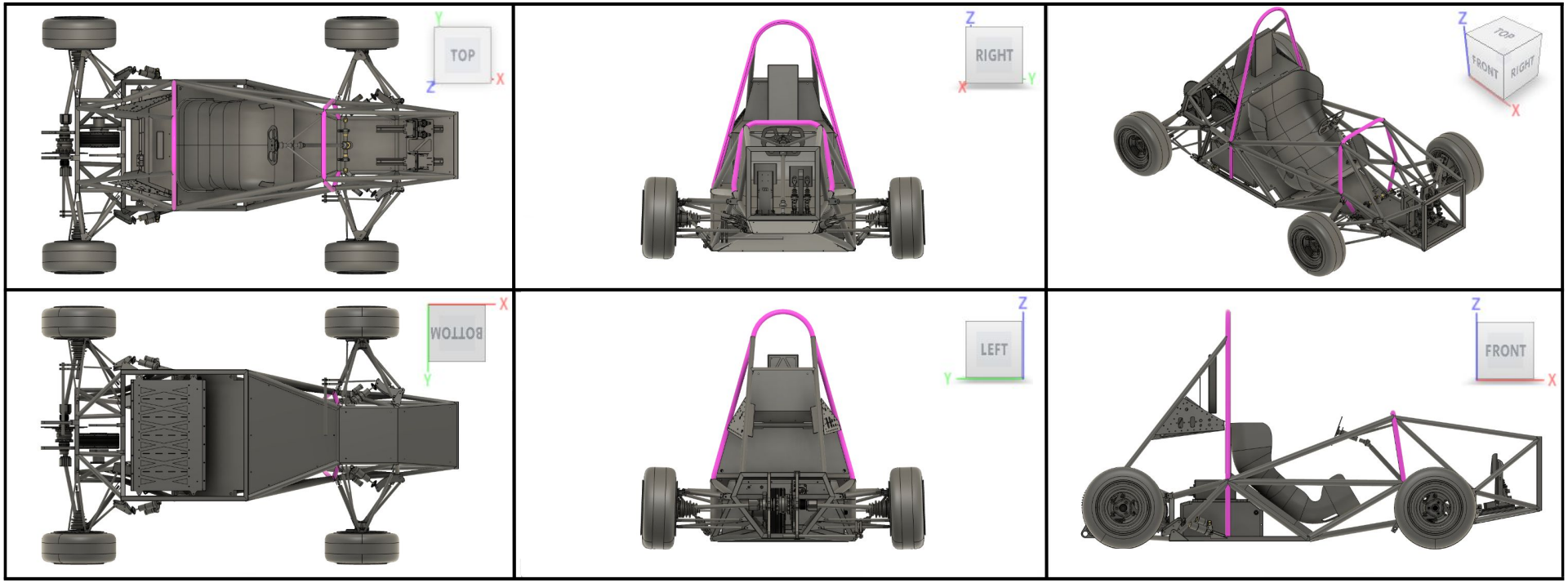
TOP
RIGHT
TOP
FRONT
RIGHT
BOTTOM
LEFT
FRONT

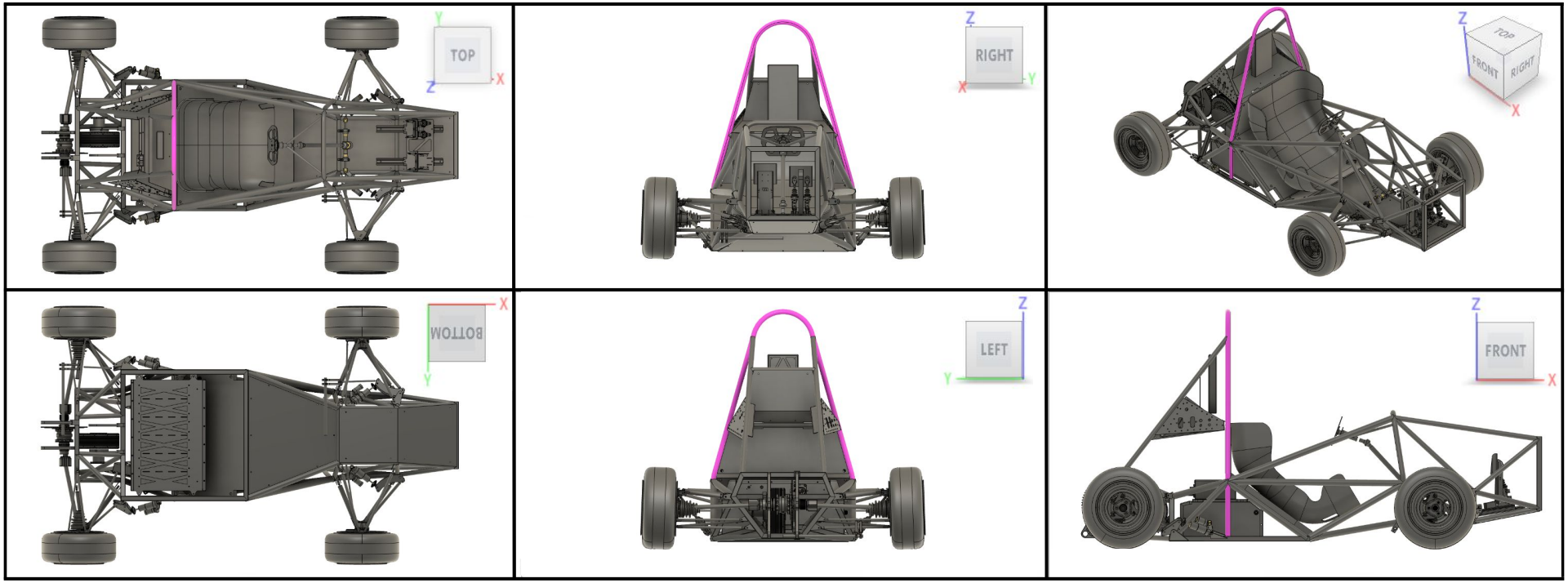
TOP
RIGHT
TOP
FRONT
RIGHT
BOTTOM
LEFT
FRONT

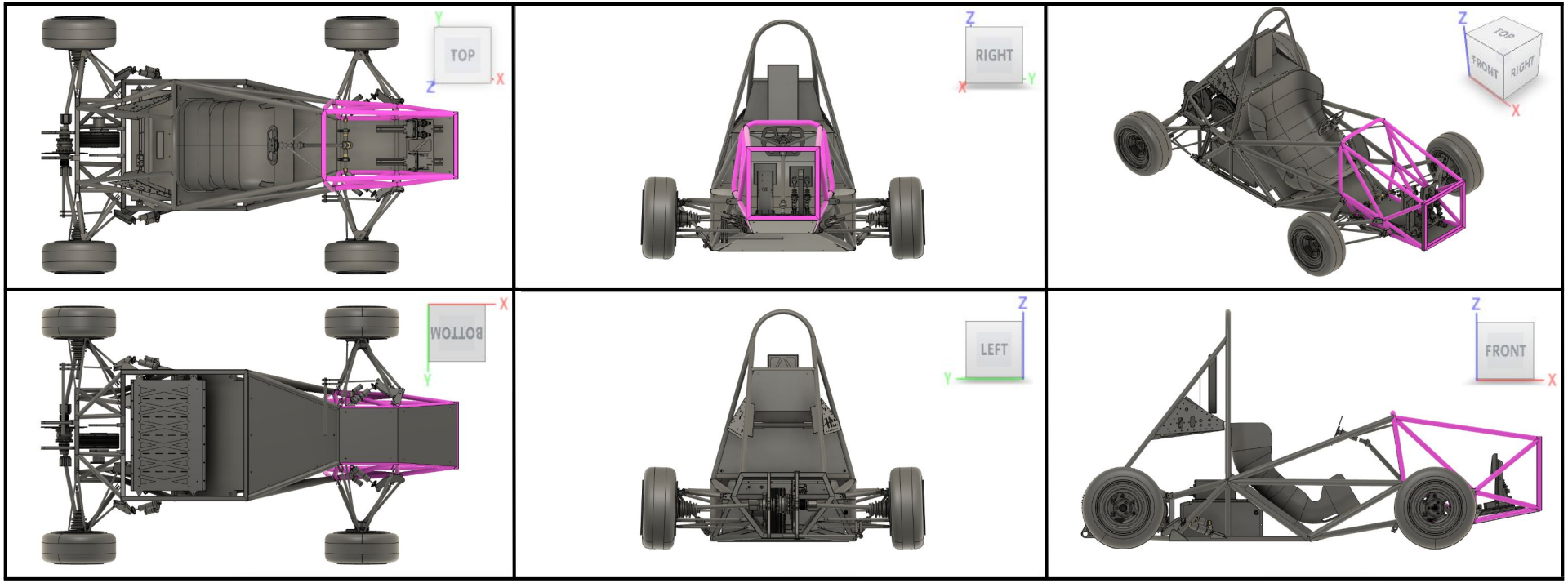
TOP
RIGHT
TOP
FRONT
RIGHT
BOTTOM
LEFT
FRONT

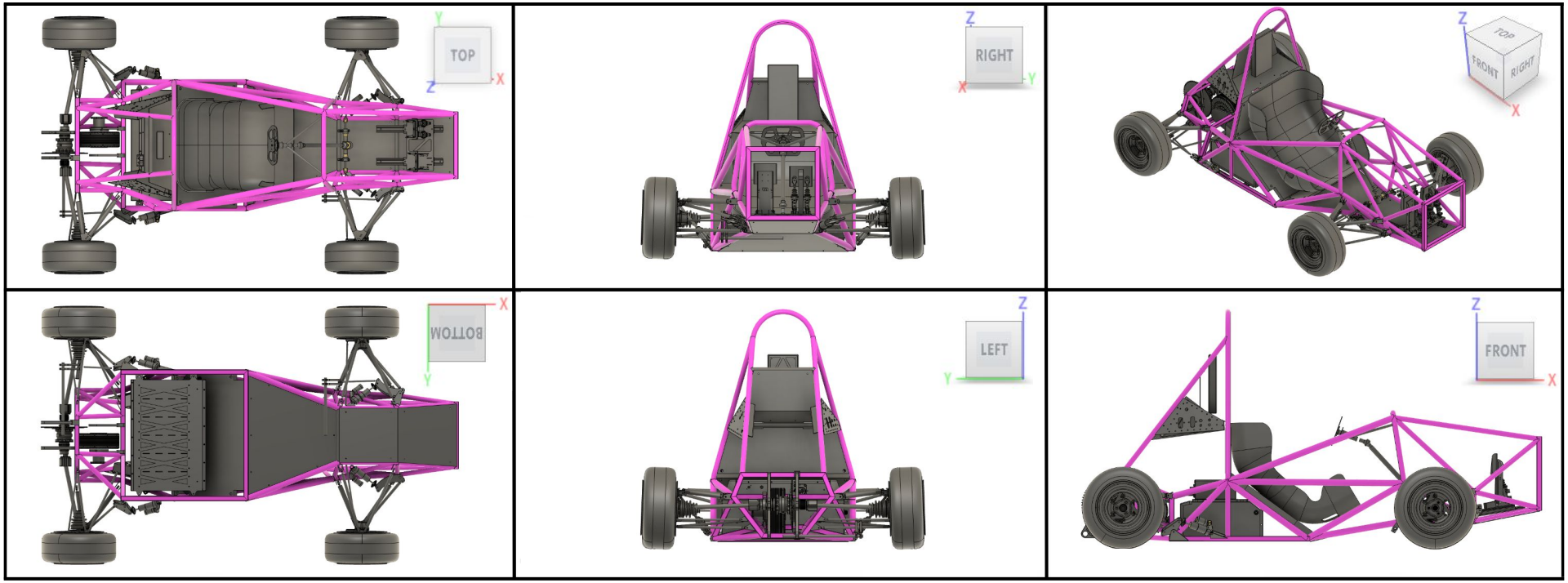
TOP
RIGHT
TOP
FRONT
RIGHT
BOTTOM
LEFT
FRONT

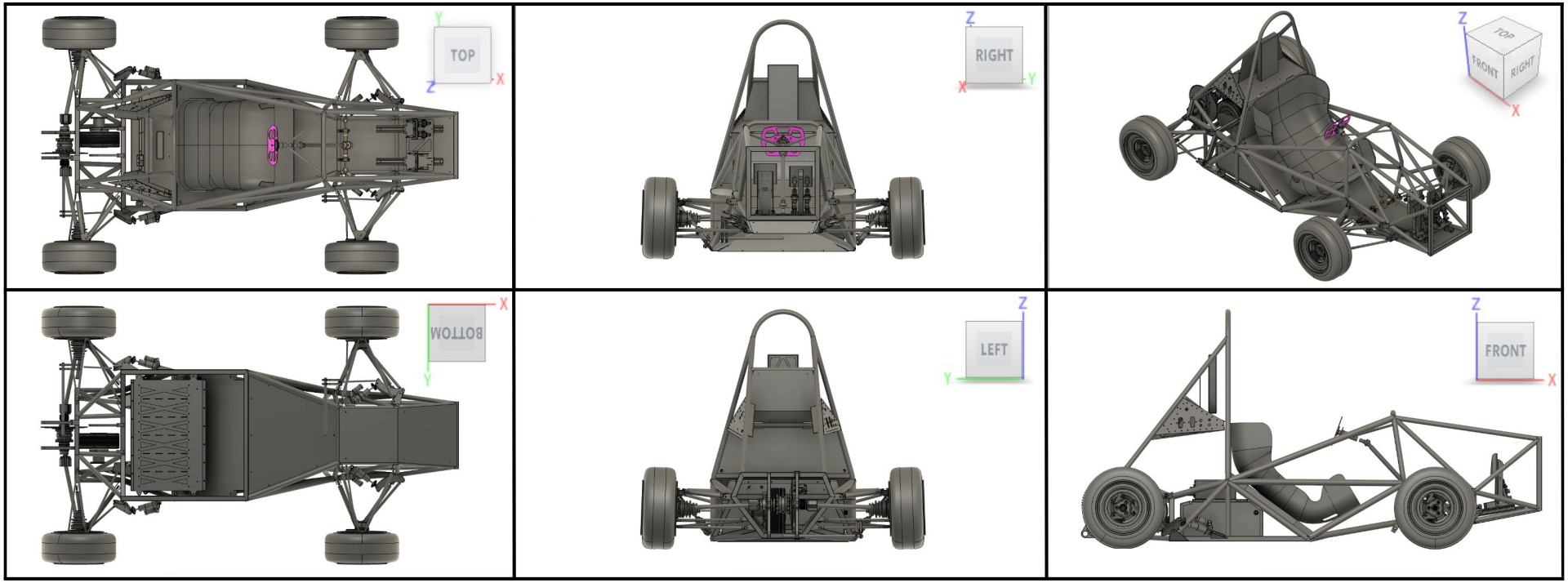
TOP
RIGHT
TOP
FRONT
RIGHT
BOTTOM
LEFT
FRONT

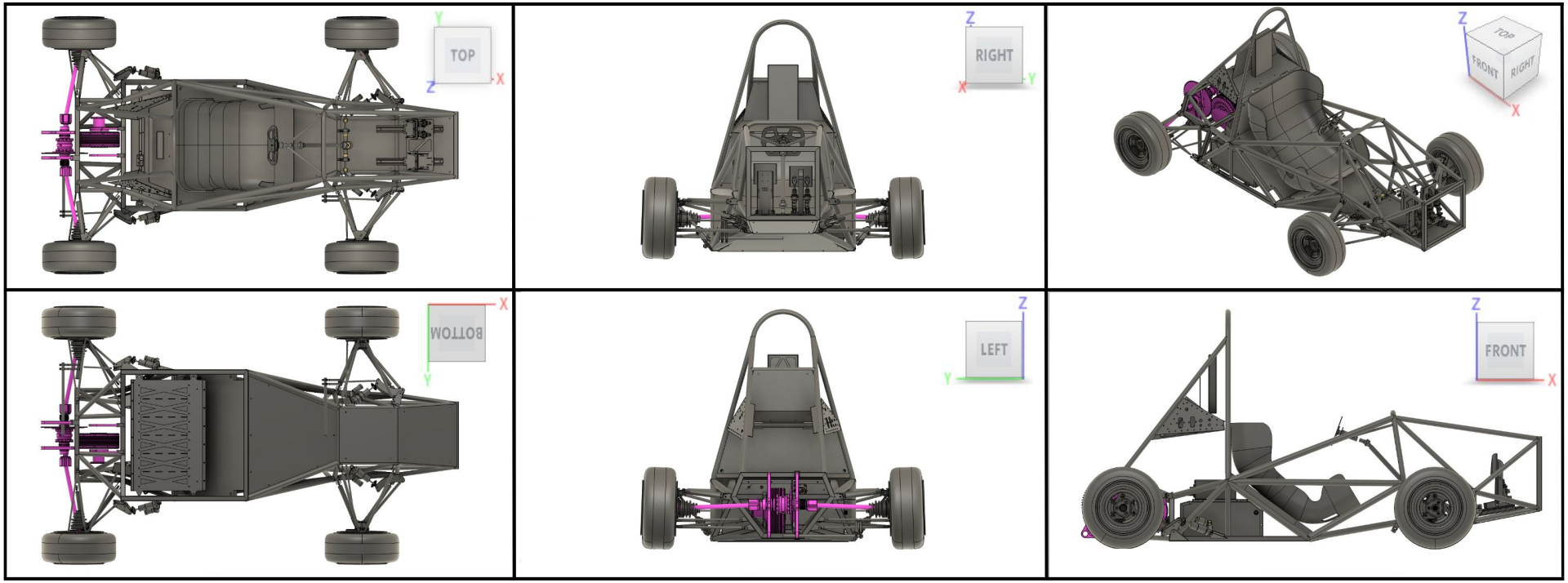
TOP
RIGHT
TOP
FRONT
RIGHT
BOTTOM
LEFT
FRONT

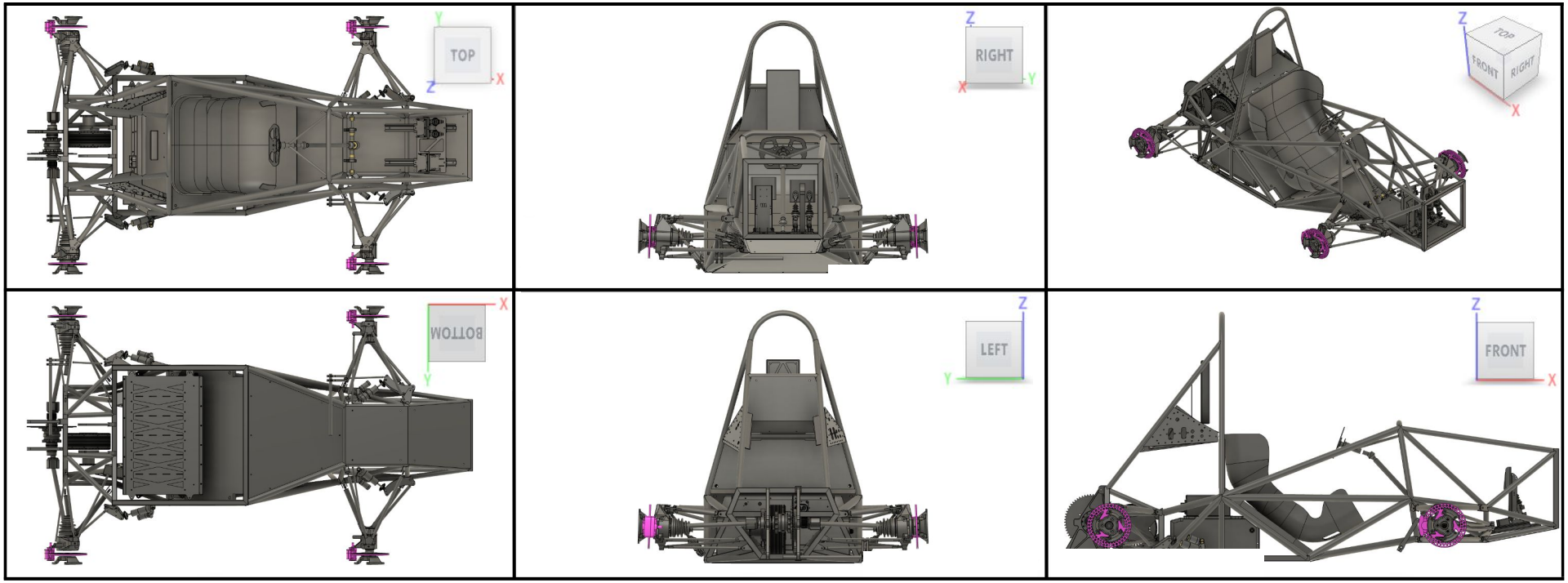
TOP
RIGHT
TOP
FRONT
RIGHT
BOTTOM
LEFT
FRONT

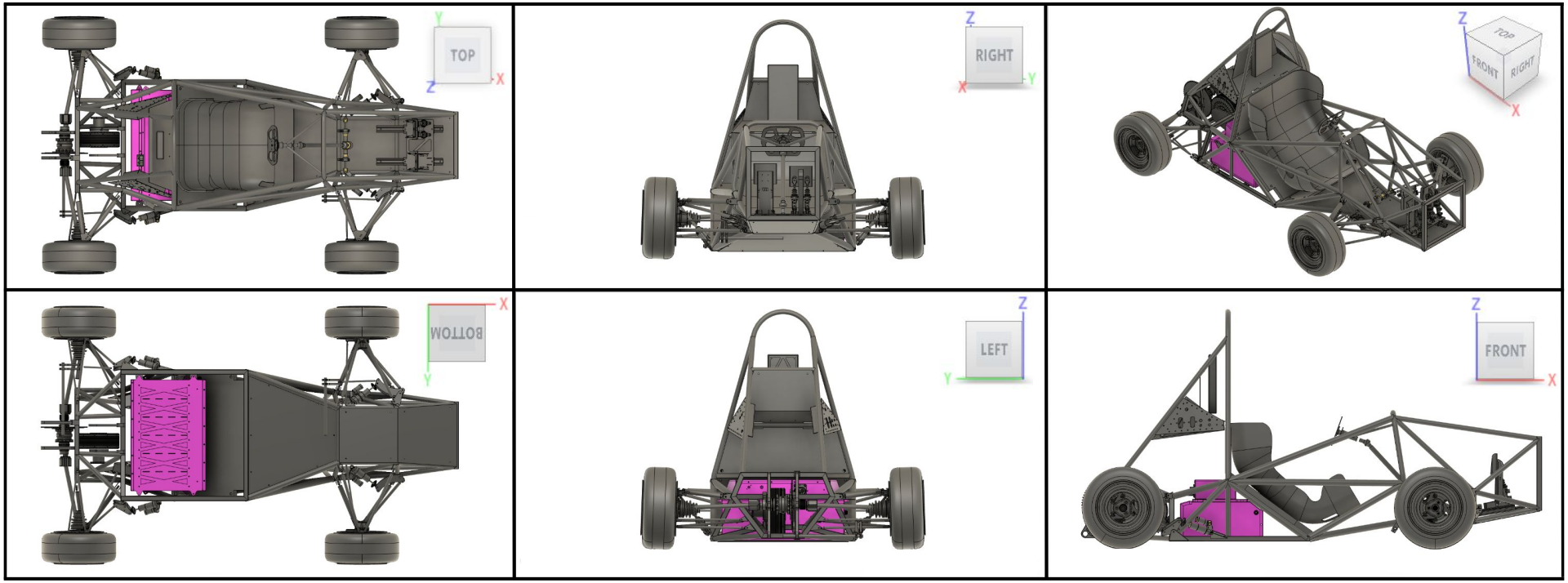
TOP
RIGHT
TOP
FRONT
RIGHT
BOTTOM
LEFT
FRONT

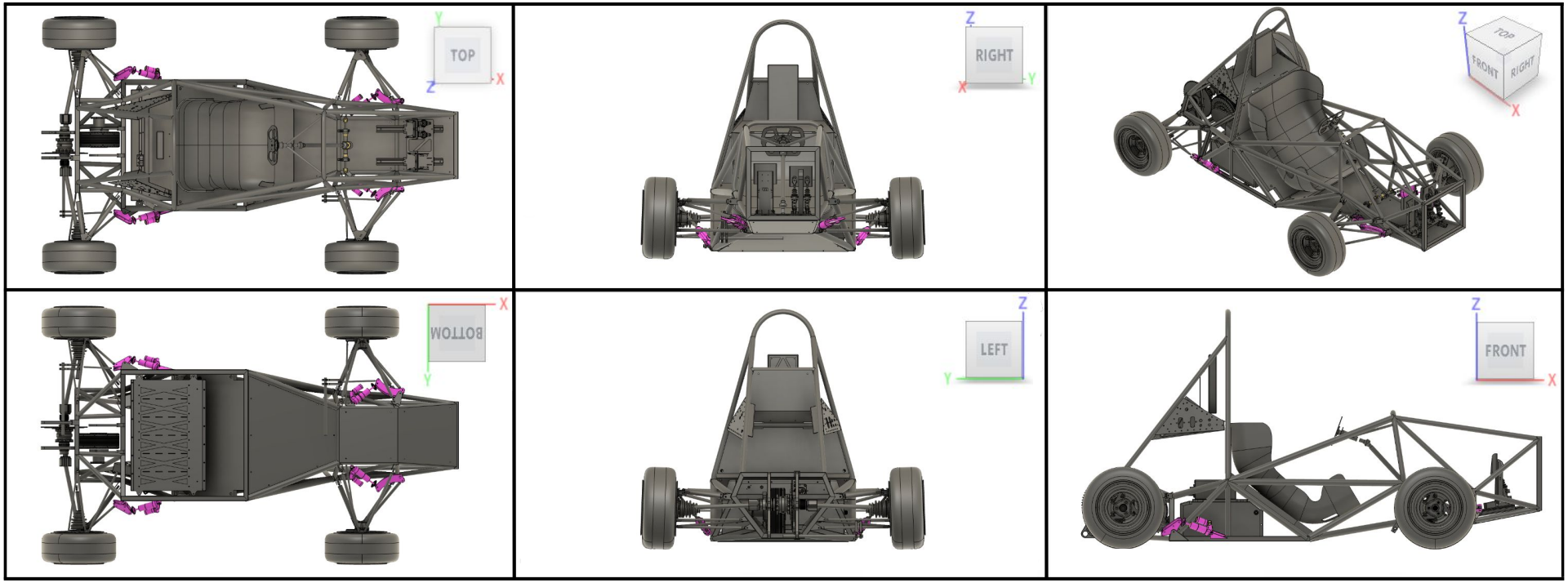
TOP
RIGHT
TOP
FRONT
RIGHT
BOTTOM
LEFT
FRONT

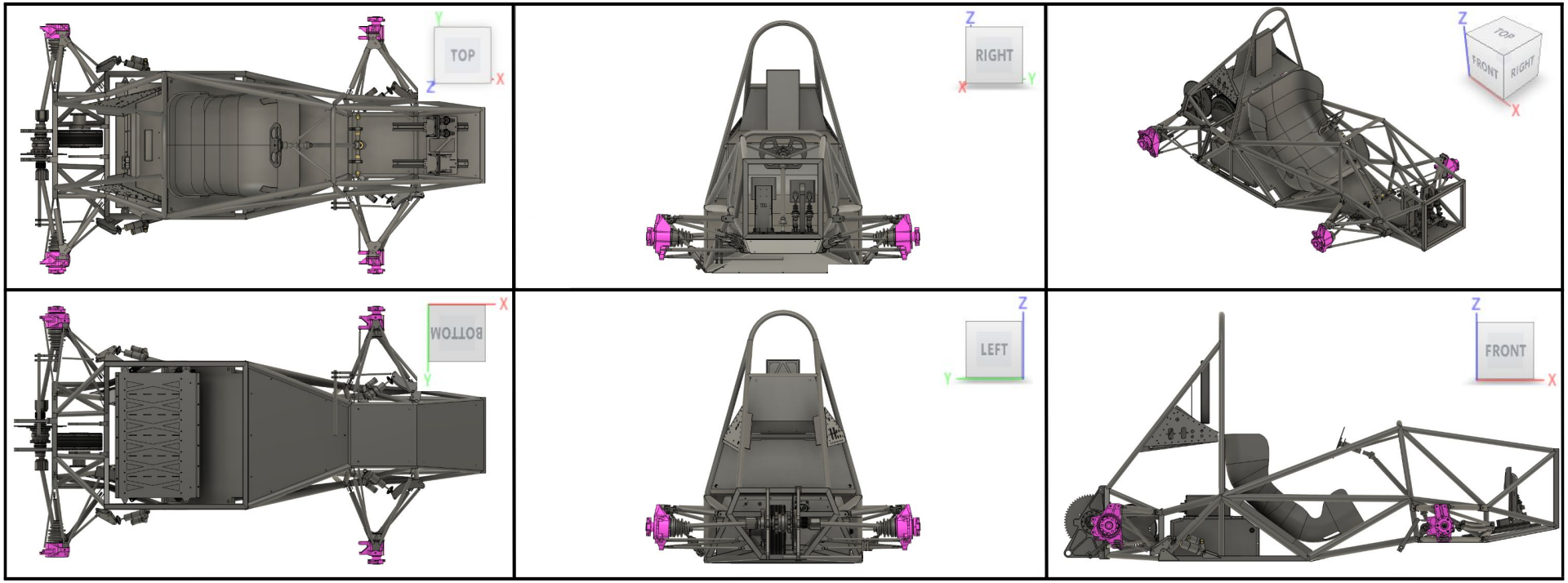
TOP
RIGHT
TOP
FRONT
RIGHT
BOTTOM
LEFT
FRONT

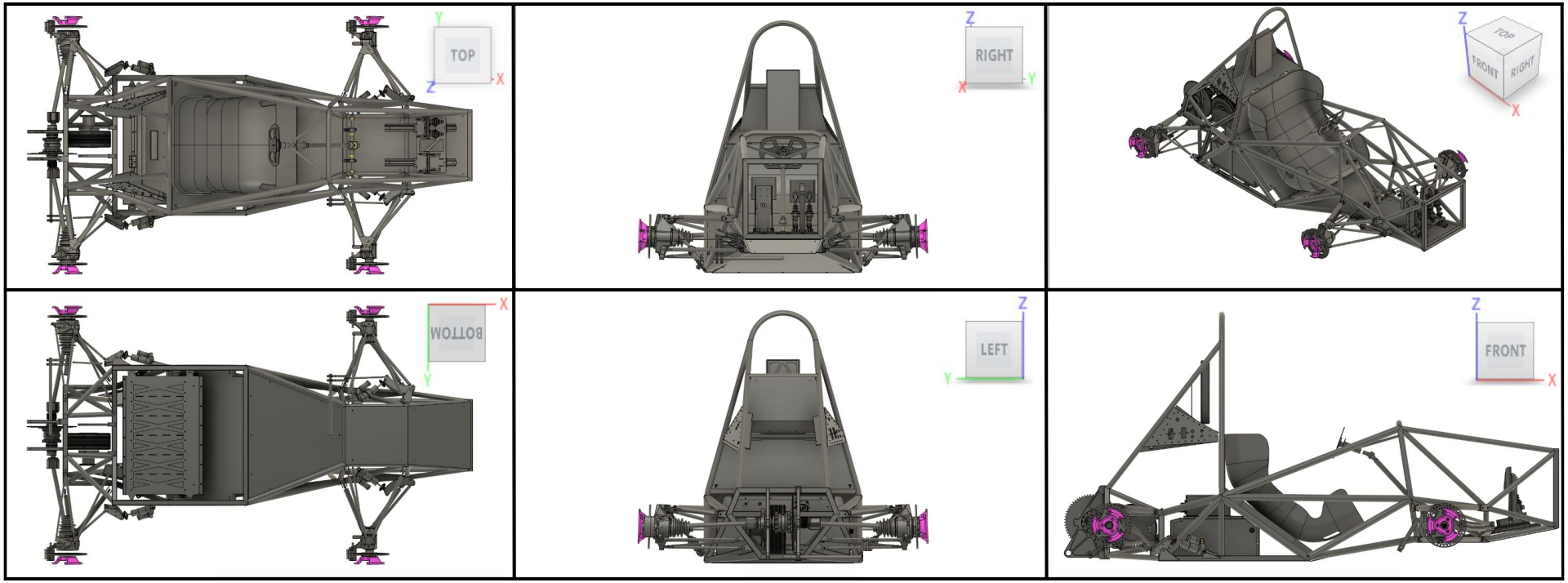
TOP
RIGHT
TOP
FRONT
RIGHT
BOTTOM
LEFT
FRONT

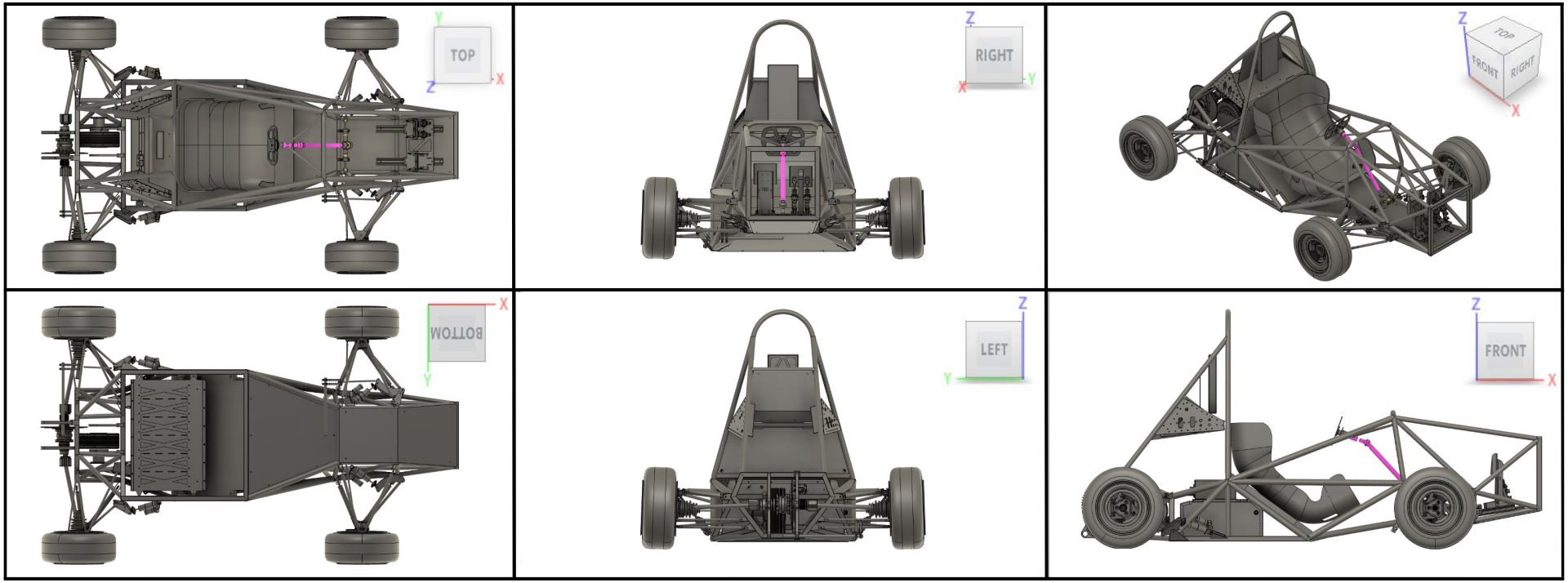
TOP
RIGHT
TOP
FRONT
RIGHT
BOTTOM
LEFT
FRONT

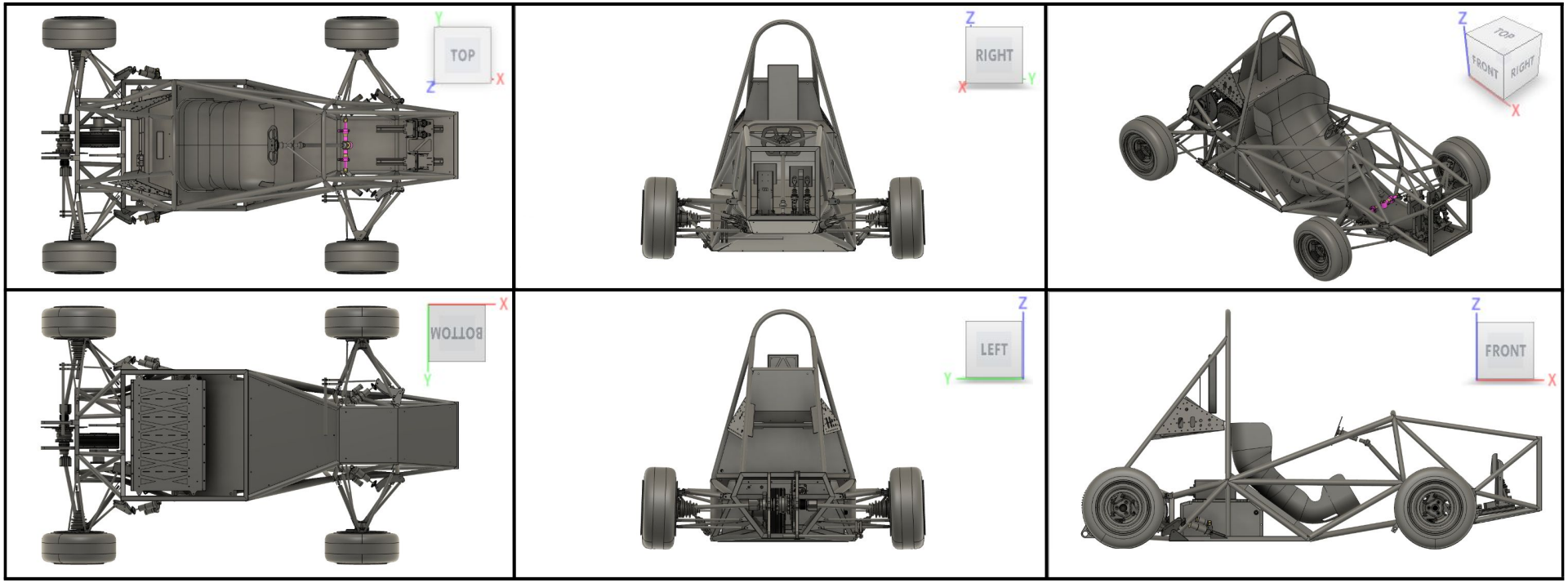
TOP
RIGHT
TOP
FRONT
RIGHT
BOTTOM
LEFT
FRONT