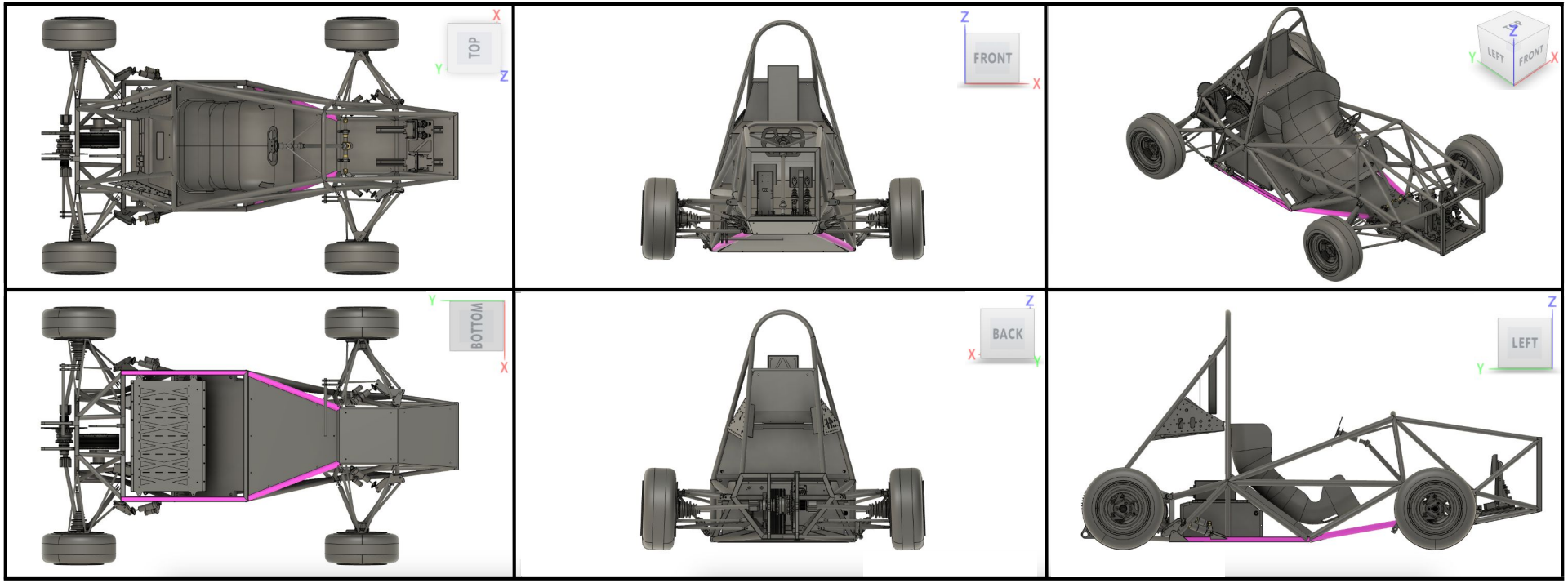
TOP
FRONT
LEFT
FRONT
BOTTOM
BACK
LEFT

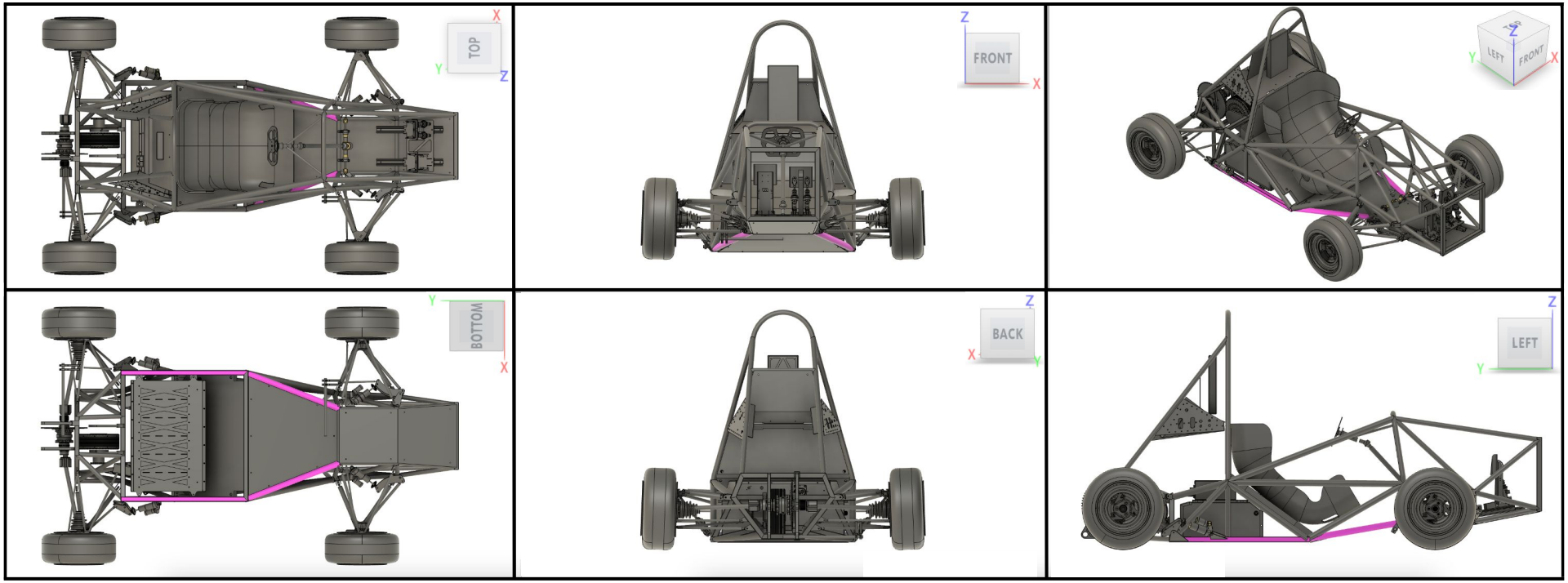
TOP
FRONT
LEFT
FRONT
BOTTOM
BACK
LEFT

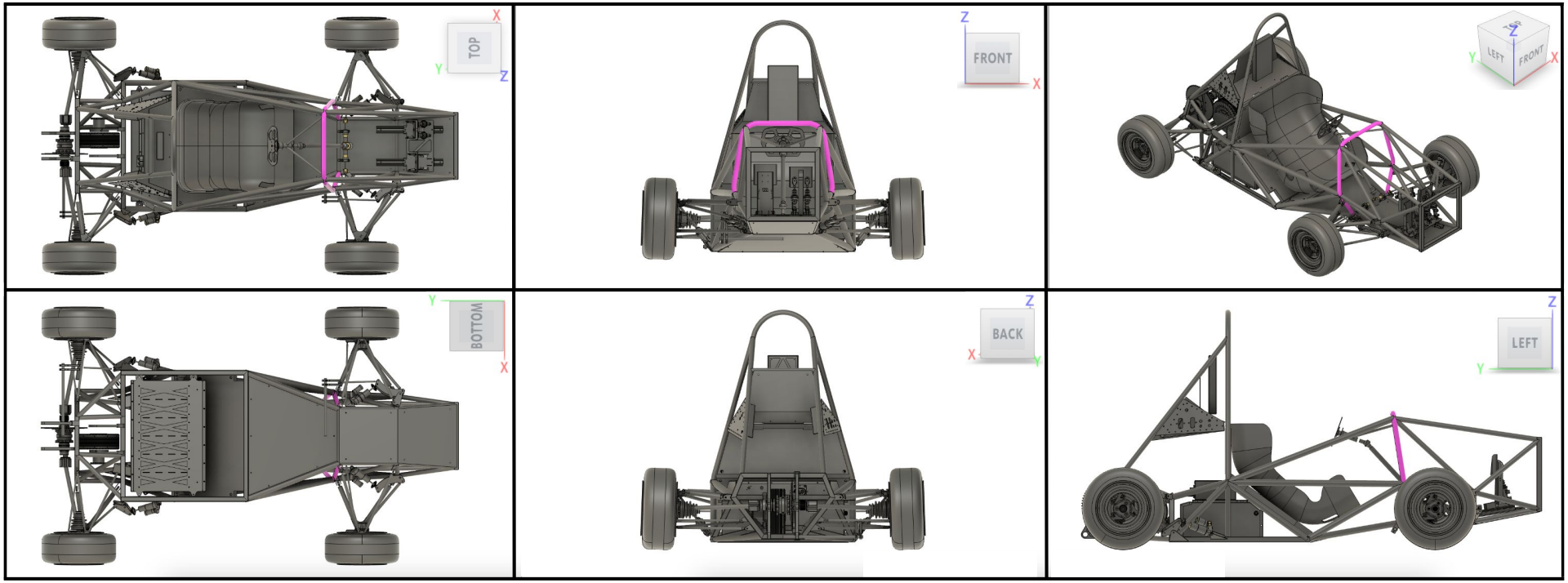
TOP
FRONT
LEFT
FRONT
BOTTOM
BACK
LEFT

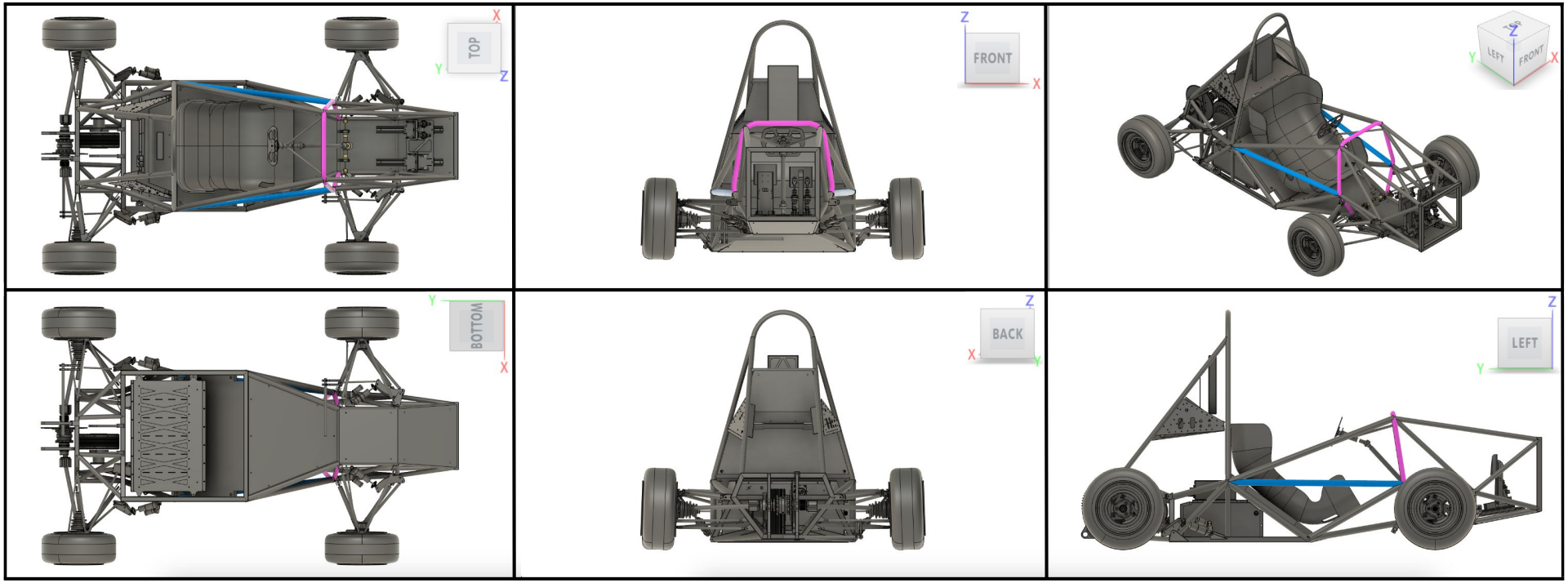
TOP
FRONT
LEFT
FRONT
BOTTOM
BACK
LEFT

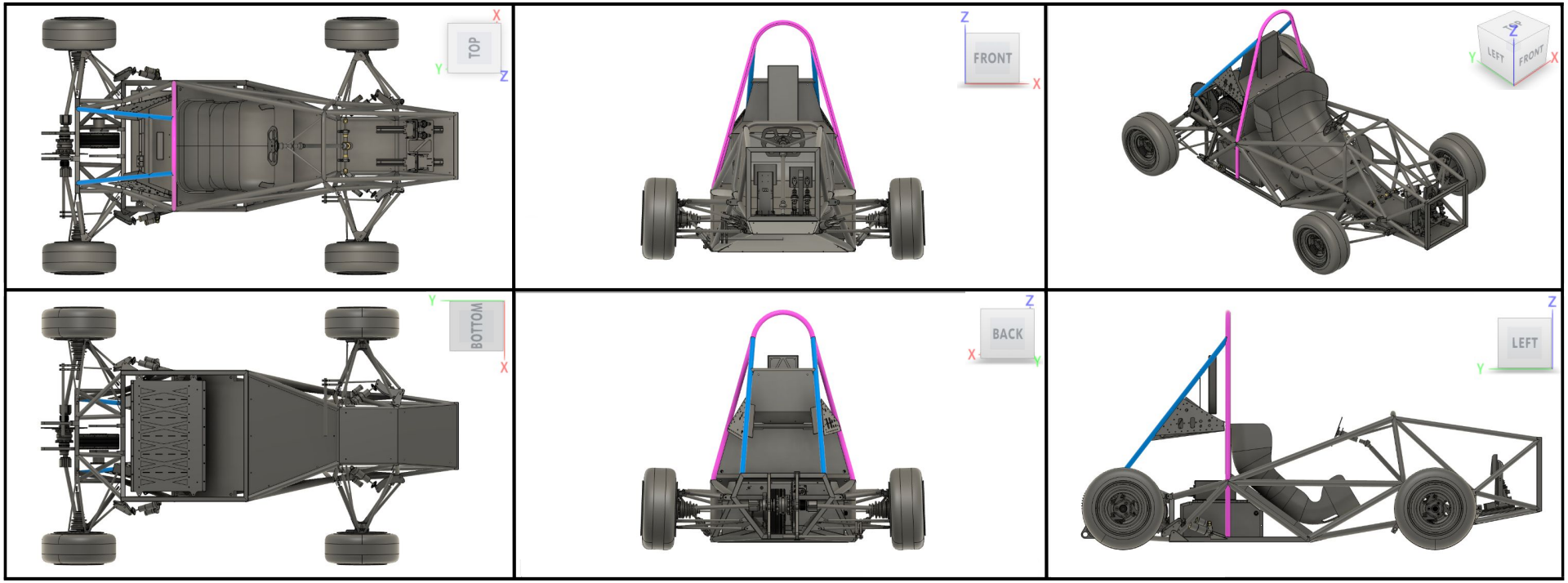
TOP
FRONT
LEFT
FRONT
BOTTOM
BACK
LEFT

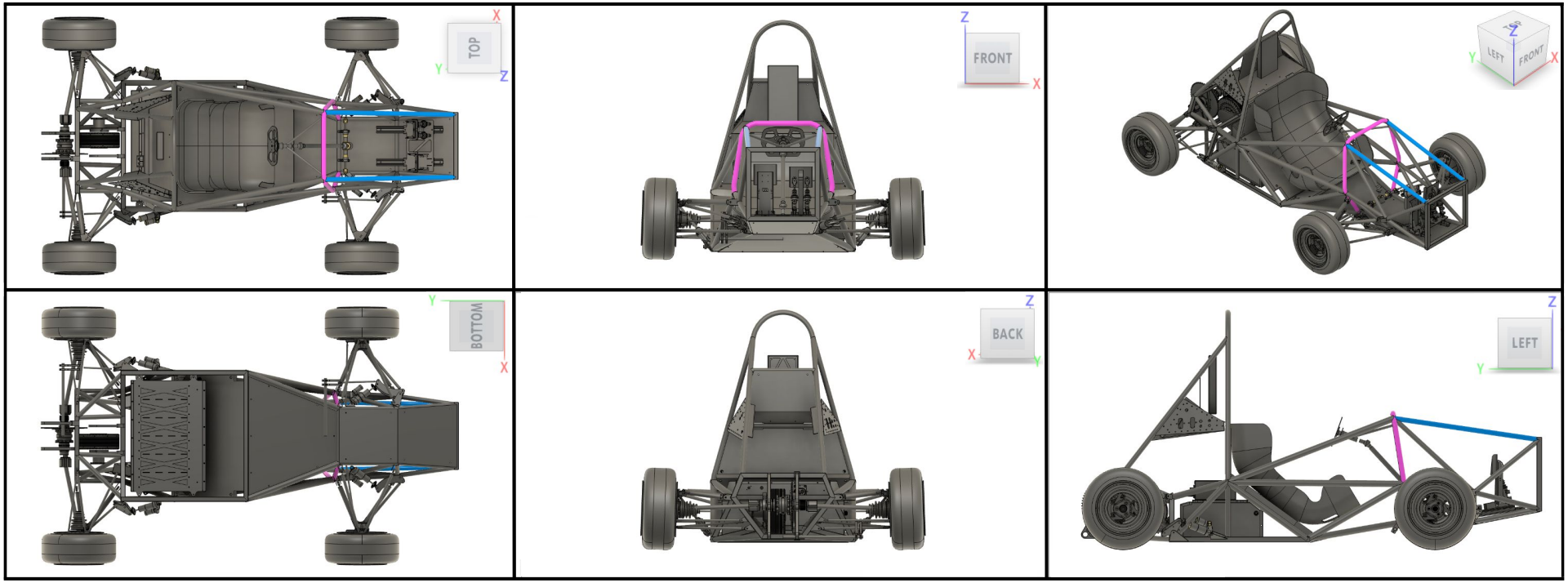
TOP
FRONT
LEFT
FRONT
BOTTOM
BACK
LEFT

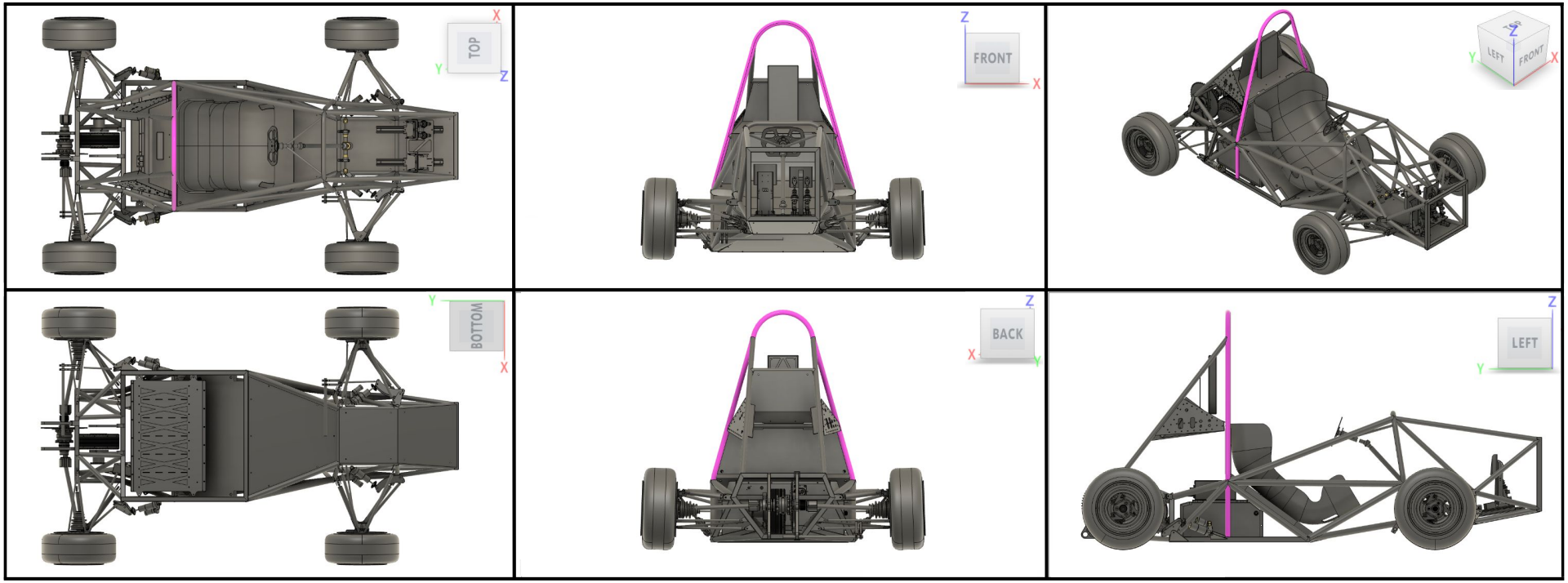
TOP
FRONT
LEFT
FRONT
BOTTOM
BACK
LEFT

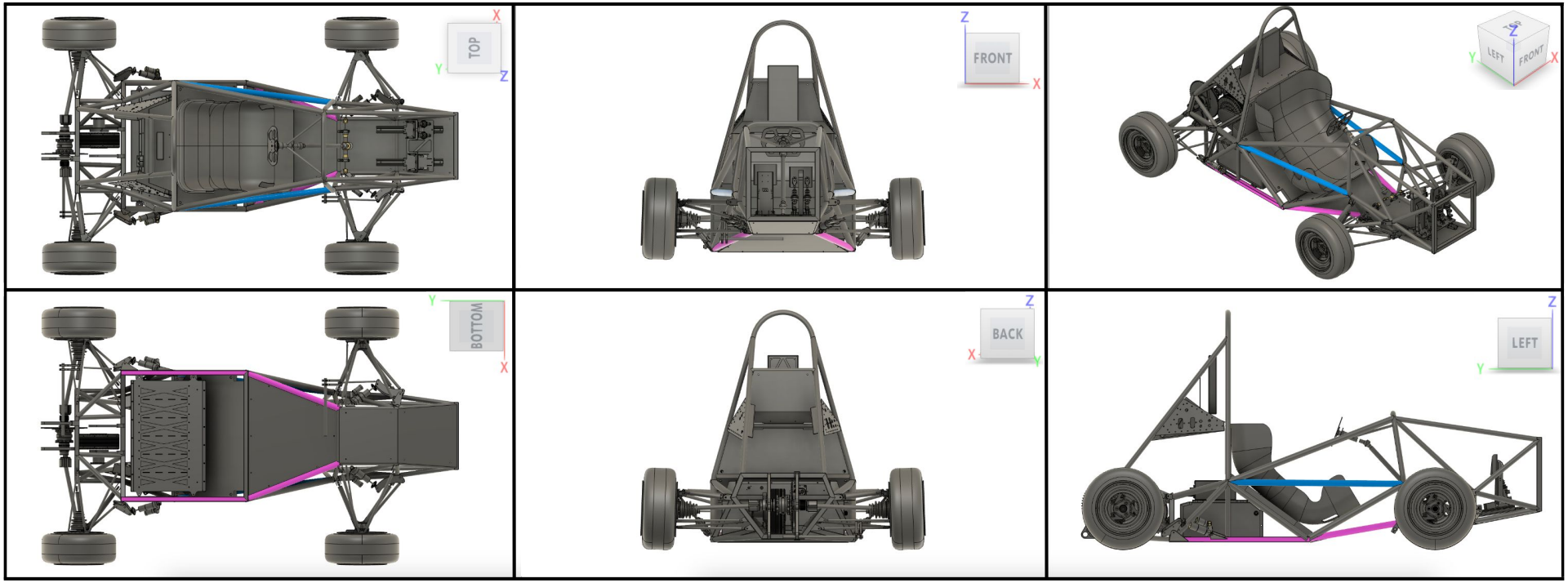
TOP
FRONT
LEFT
FRONT
BOTTOM
BACK
LEFT

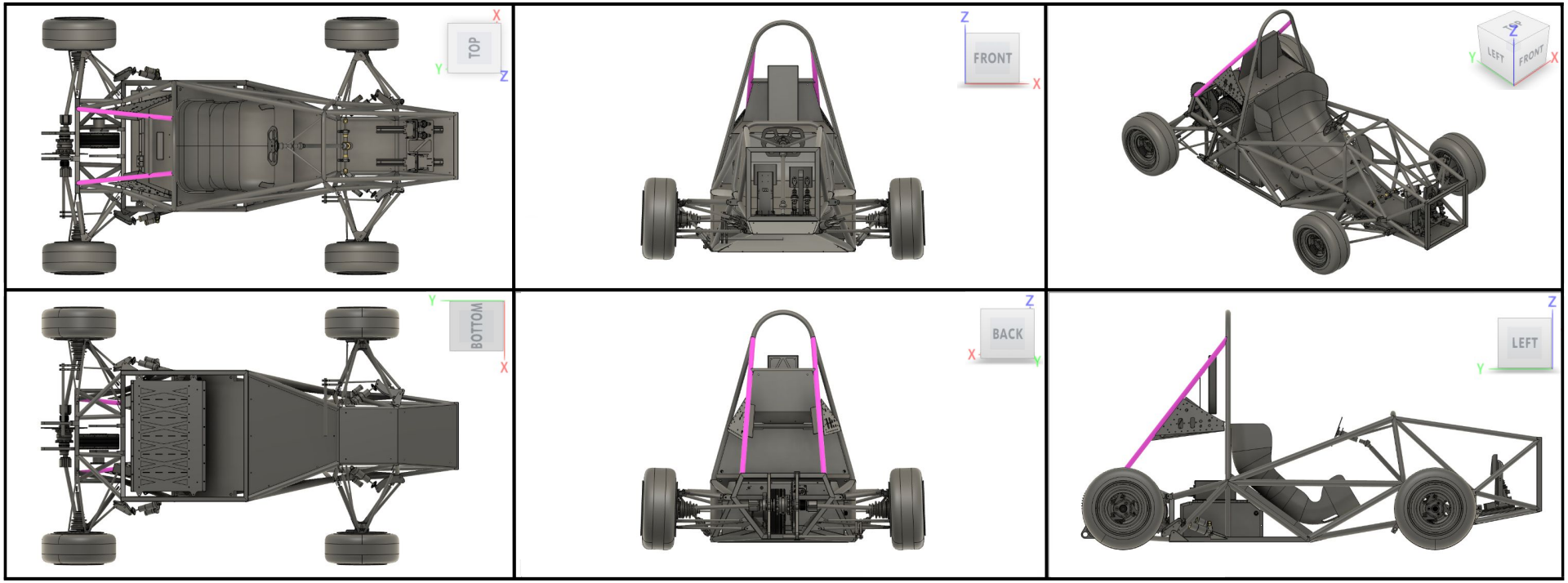
TOP
FRONT
LEFT
FRONT
BOTTOM
BACK
LEFT

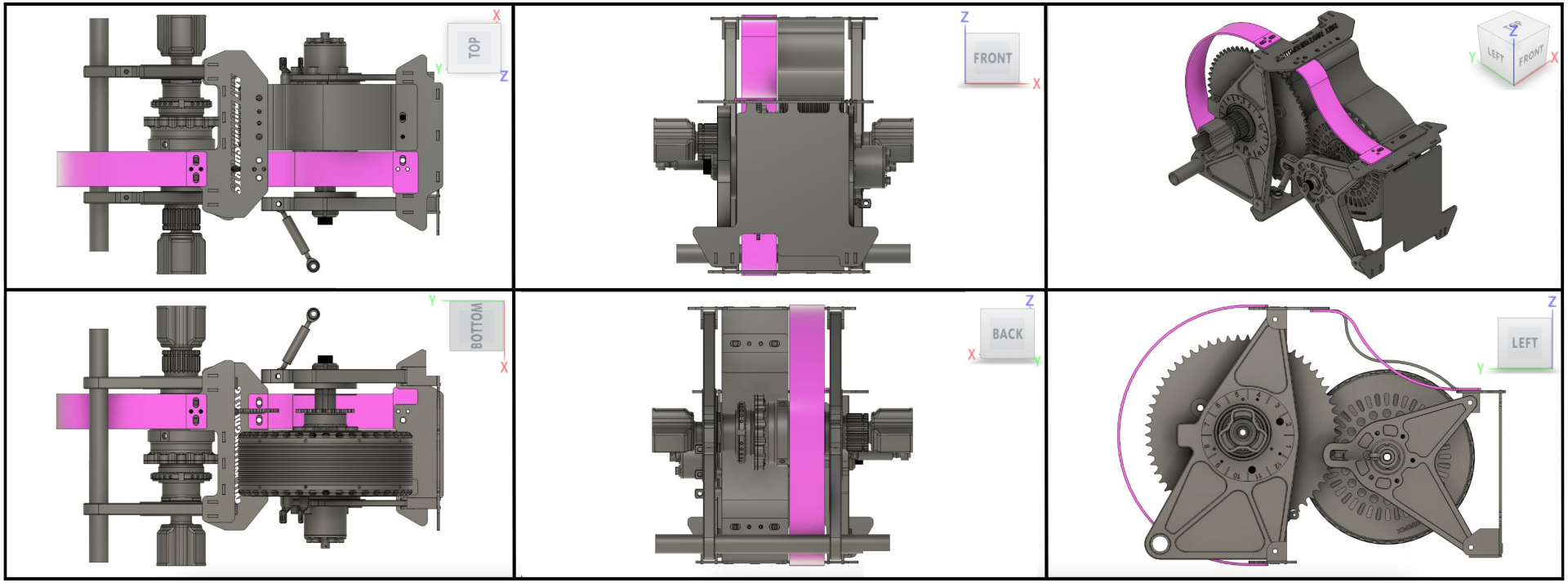
TOP
FRONT
LEFT
FRONT
BOTTOM
BACK
LEFT

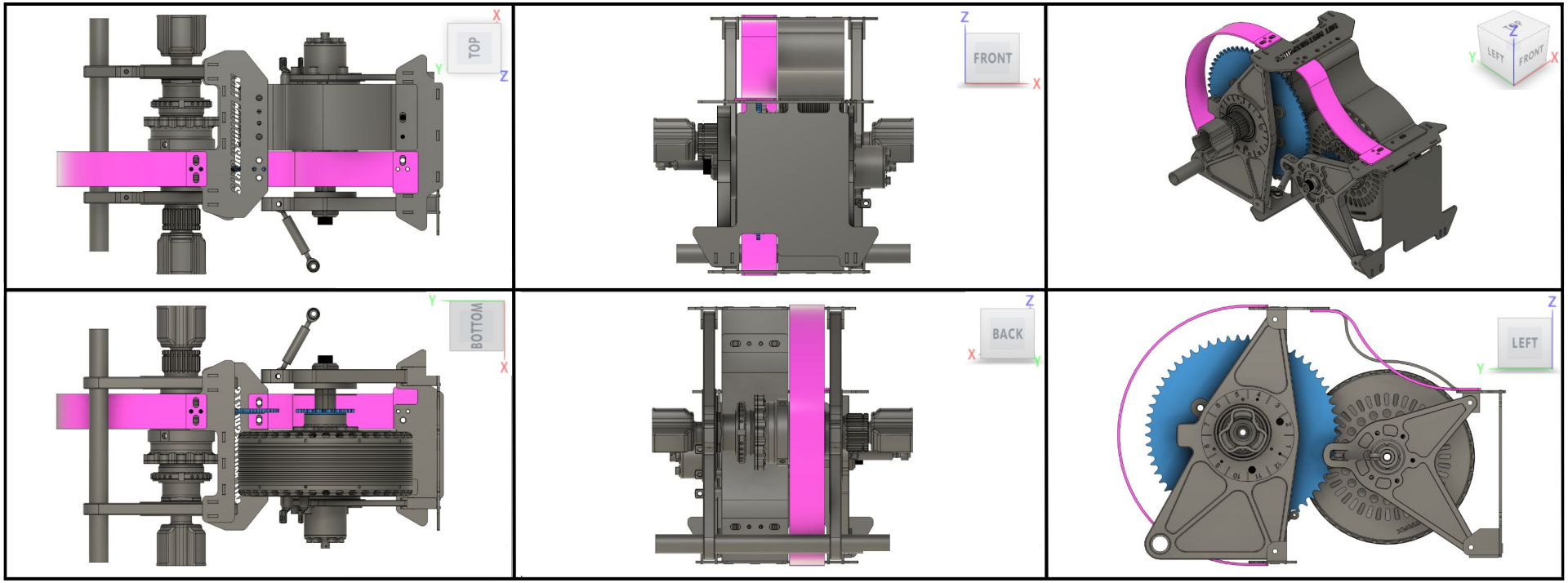
TOP
FRONT
LEFT
FRONT
BOTTOM
BACK
LEFT

TOP
FRONT
LEFT
FRONT
BOTTOM
BACK
LEFT

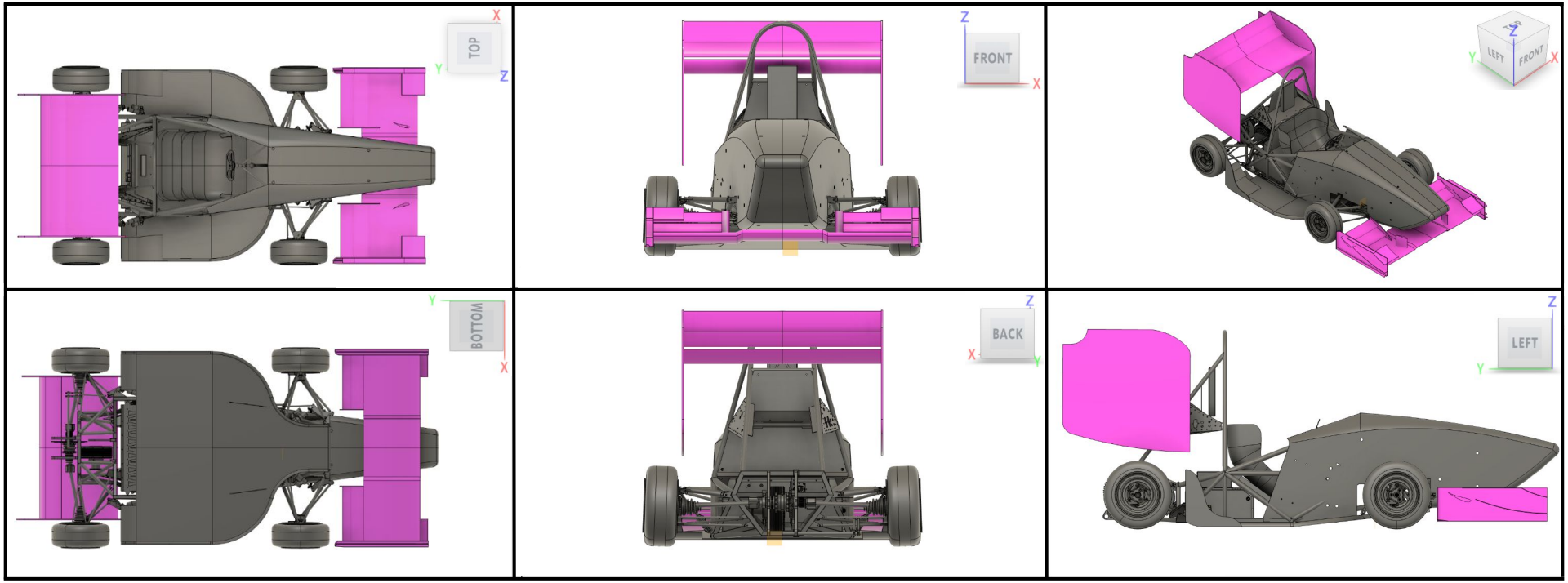
TOP
FRONT
LEFT
FRONT
BOTTOM
BACK
LEFT

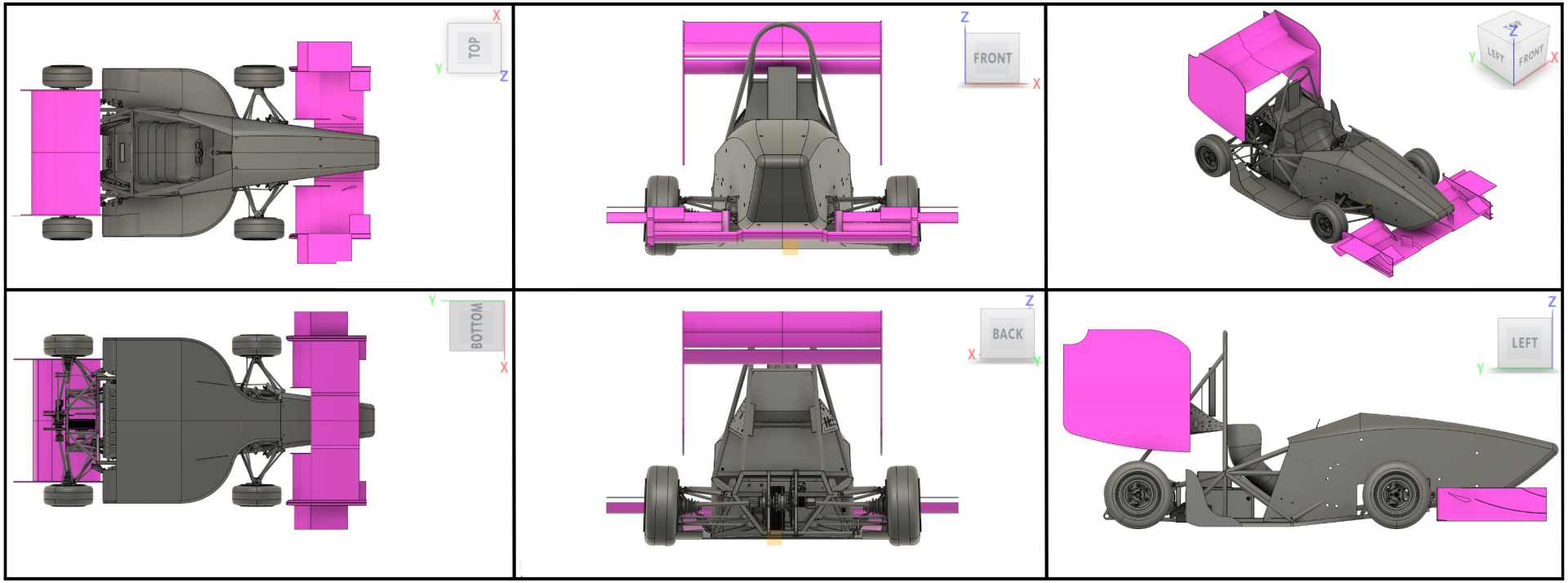
TOP
FRONT
LEFT
FRONT
BOTTOM
BACK
LEFT

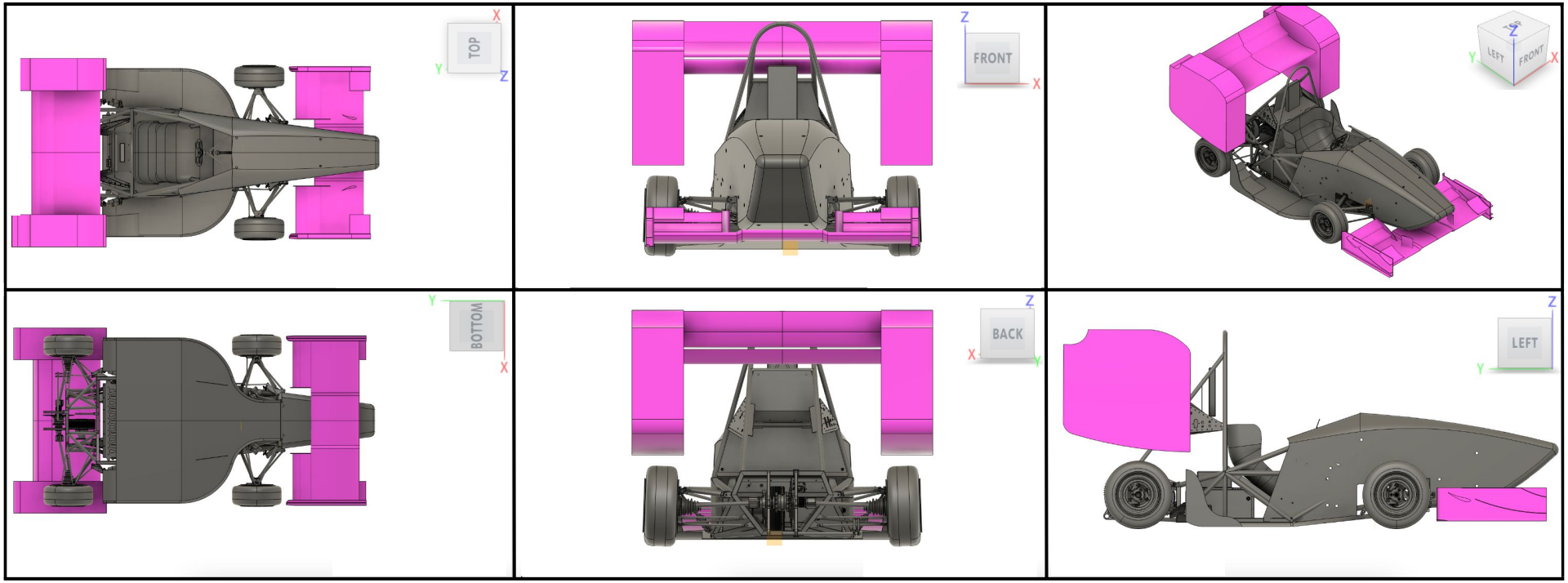
TOP
FRONT
LEFT
FRONT
BOTTOM
BACK
LEFT

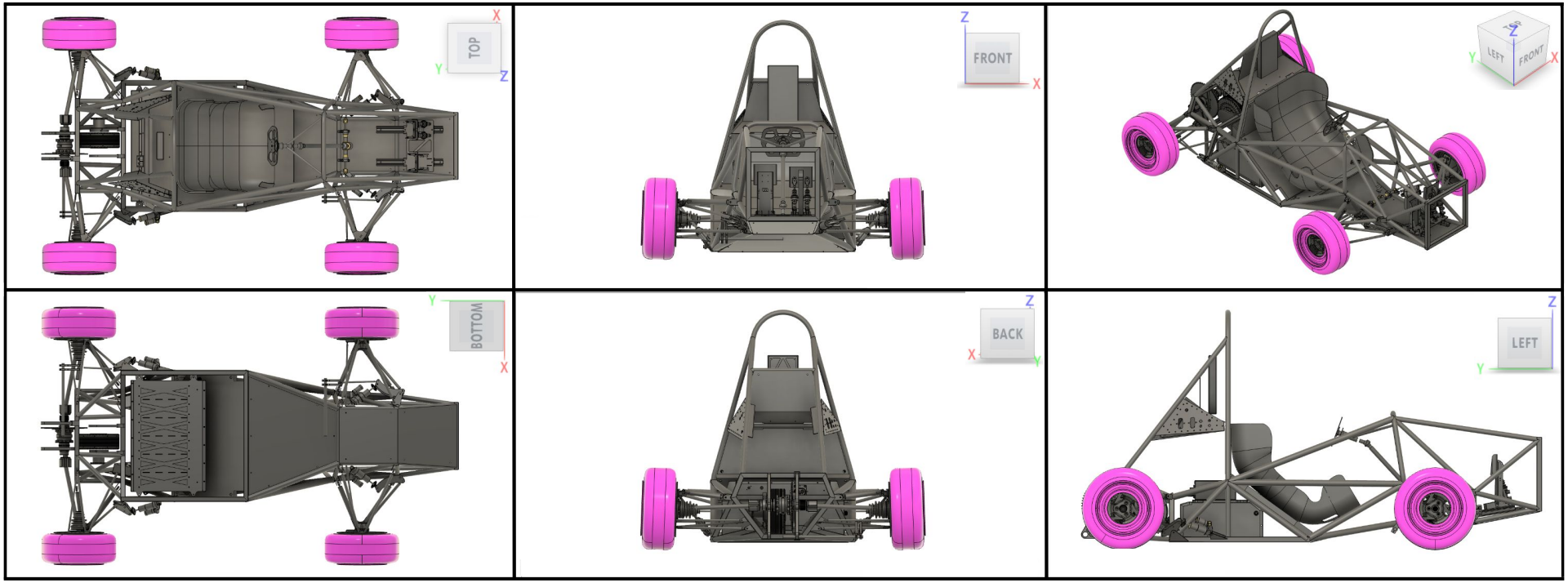
TOP
FRONT
LEFT
FRONT
BOTTOM
BACK
LEFT