Motivation

Reinforcement Learning

Motivation

- Control theory refresher
- Model Predictive Control
- Model-free vs. model-based control

Closed-Loop Control

- controller compares reference and output
- error signal drives control action

maintains temperature near setpoint

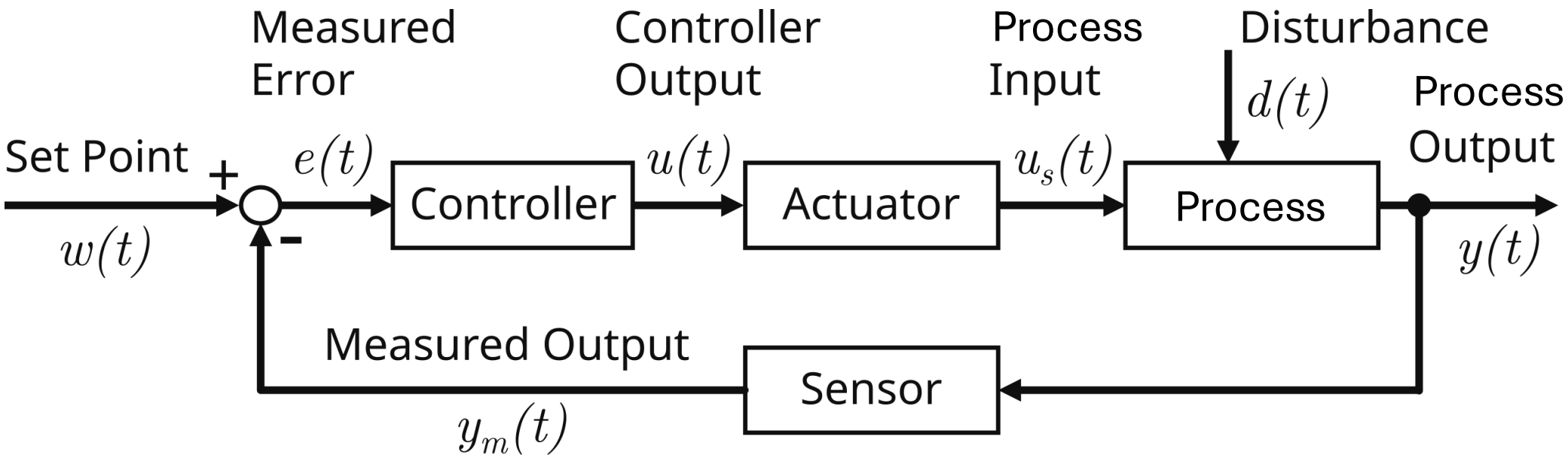

Control Objectives

- stability (bounded output)

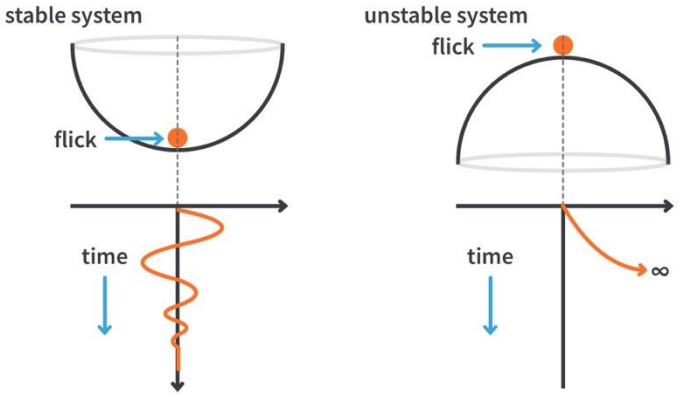

- fast response: rise and settling time
- low overshoot
- small steady-state error
- robustness (insensitivity to model uncertainty and disturbances)

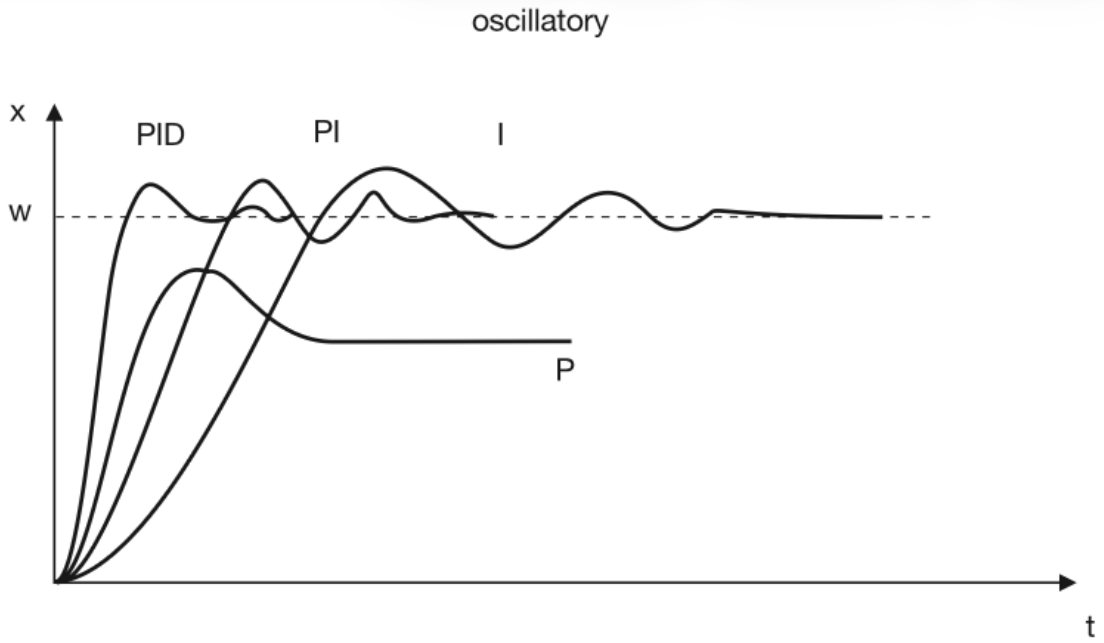

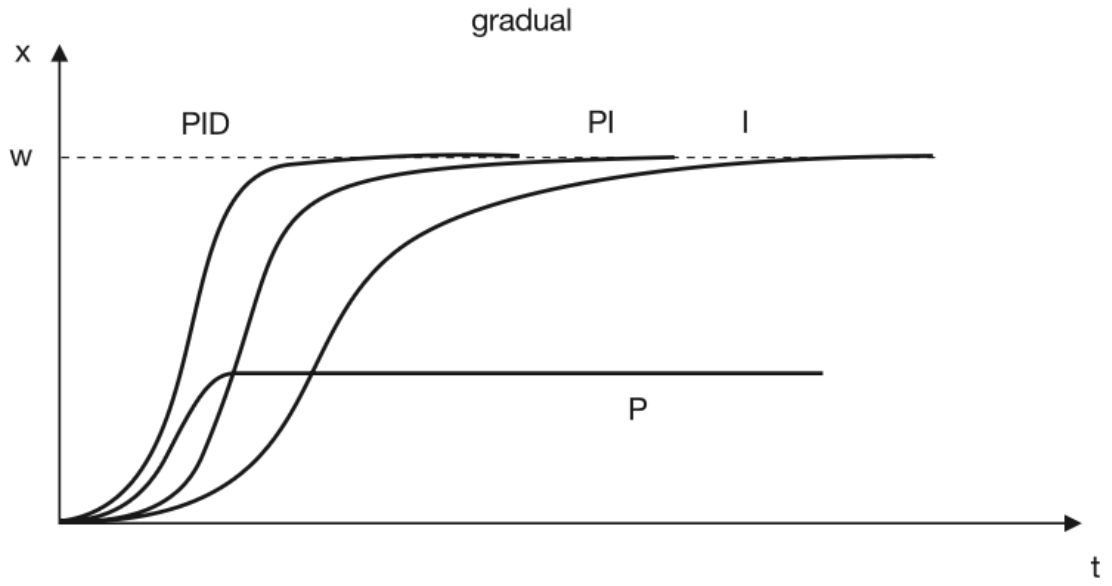

example: pneumatic PID

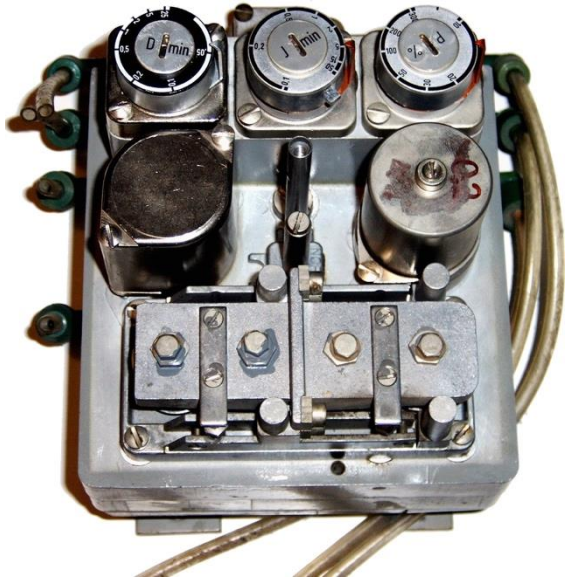

PID Controllers

most widely used industrial controller

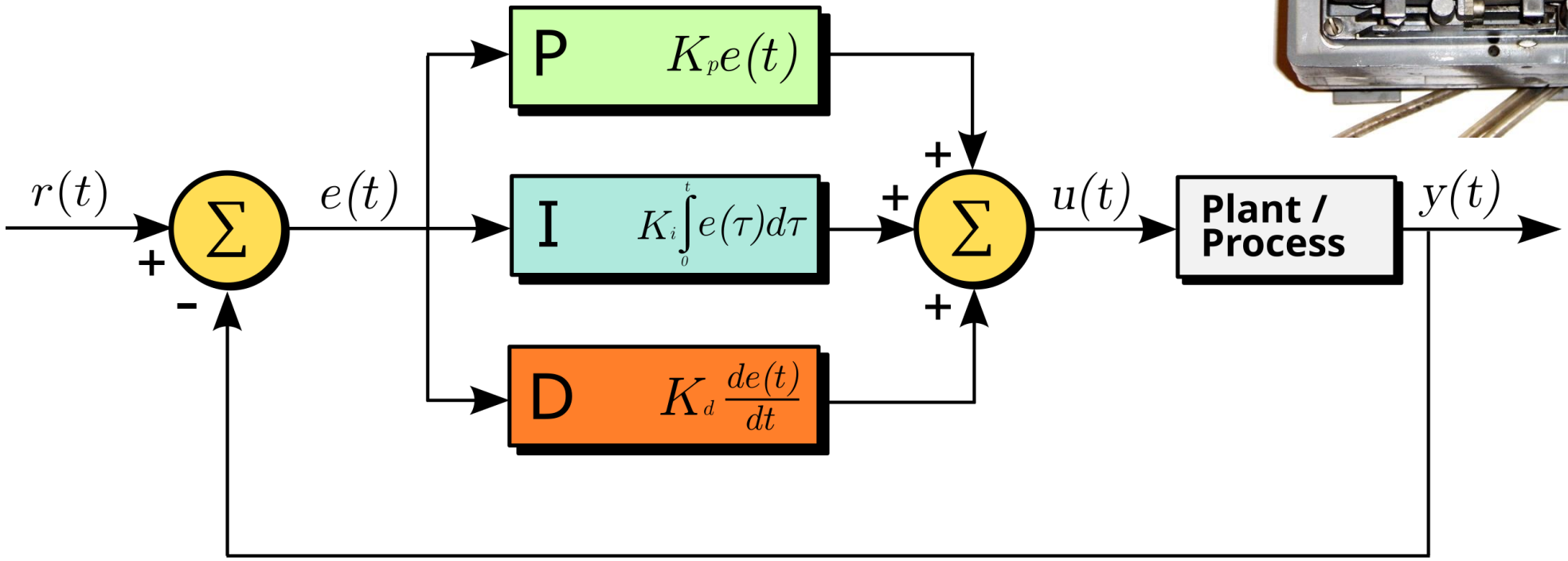

purely reactive

Limits of Classic Control

- mostly reactive, tuned for simple linear systems
- poor handling of constraints and delays
- struggles with high-dimensional, nonlinear, or unstructured environments

many modern applications (robotics, autonomous driving, games) involve:

- large state/action spaces
- partial observability
- complex interactions

→ hard or impossible to design classic controllers manually

Model Predictive Control (MPC)

optimal control method

1. apply a model of the system to predict future developments (e.g., differential equation, but potentially also using ML)
2. adjust the manipulated variable to minimize the deviation of the controlled variable over several steps → optimization
3. execute only the first step, then repeat the process

requires model of the system

Model-Free vs Model-Based Control

- model-based control (MPC): uses a system model to plan or optimize actions
- model-free reinforcement learning (RL): learns control directly from interaction → no explicit system model needed

trade-off:

- model-based: sample efficient, predictive, naturally handles constraints
- model-free: flexible, works with unknown dynamics, maximizes long-term reward

When to Use What

rule of thumb:

- PID: simple loops
- MPC: constrained multivariable control
- RL: complex systems without good models

many modern systems combine them:

- PID for low-level control
- MPC for high-level trajectory optimization
- RL for strategy or policy learning

example: autonomous driving

- PID: steering torque
- MPC: trajectory tracking
- RL: driving behavior