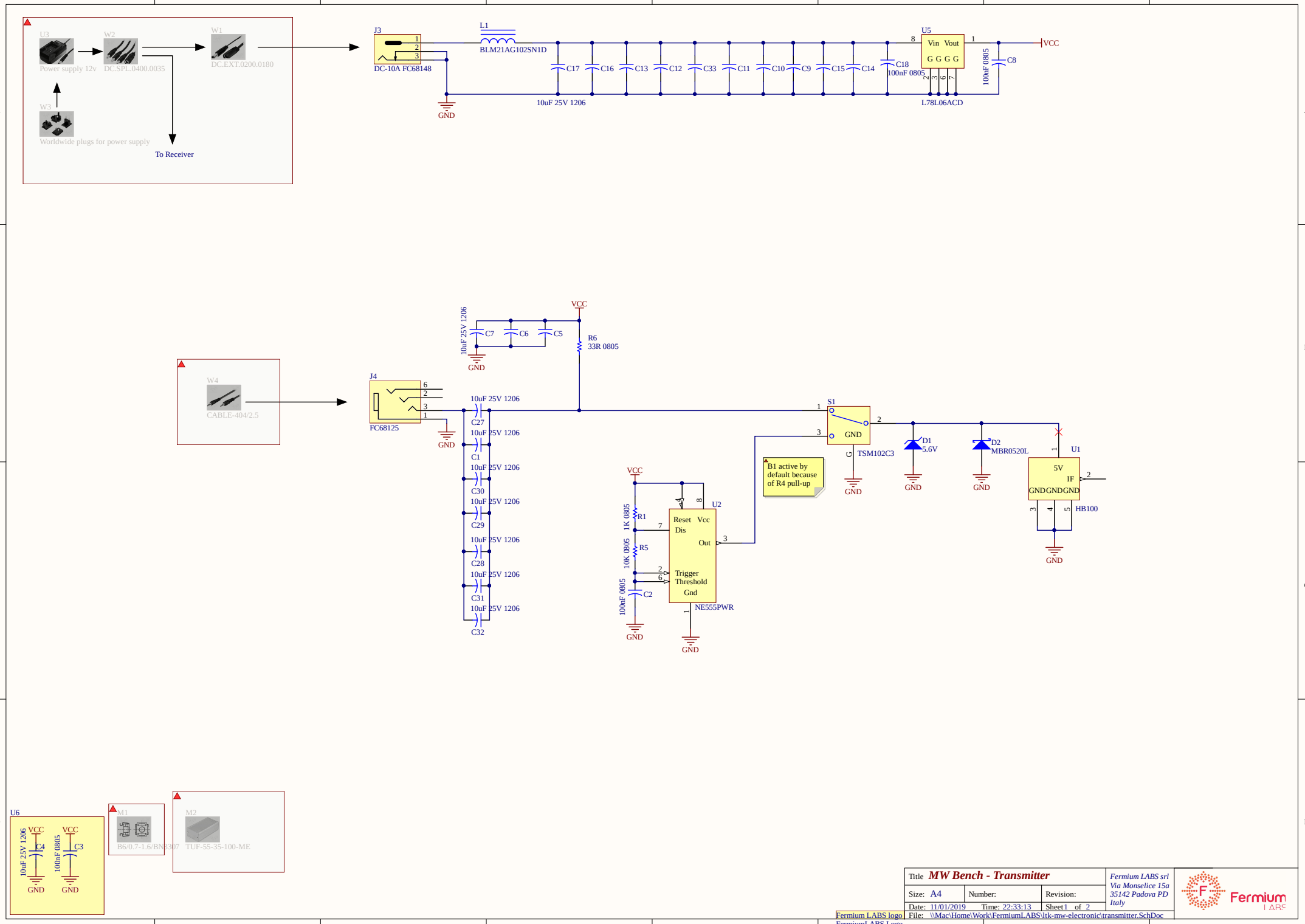


| | | |
|---|---|---|
| Title **MW Bench - Transmitter** | | *Fermium LABS srl* *Via Monselice 15a* *35142 Padova PD* *Italy* |
| Size: A4 | Number: | Revision: |
| Date: 11/01/2019 | Time: 22:33:13 | Sheet 1 of 2 |
| File: \\Mac\Home\Work\FermiumLABS\ltk-mw-electronic\transmitter.SchDoc | | |

Fermium LABS logo
FermiumLABS Logo

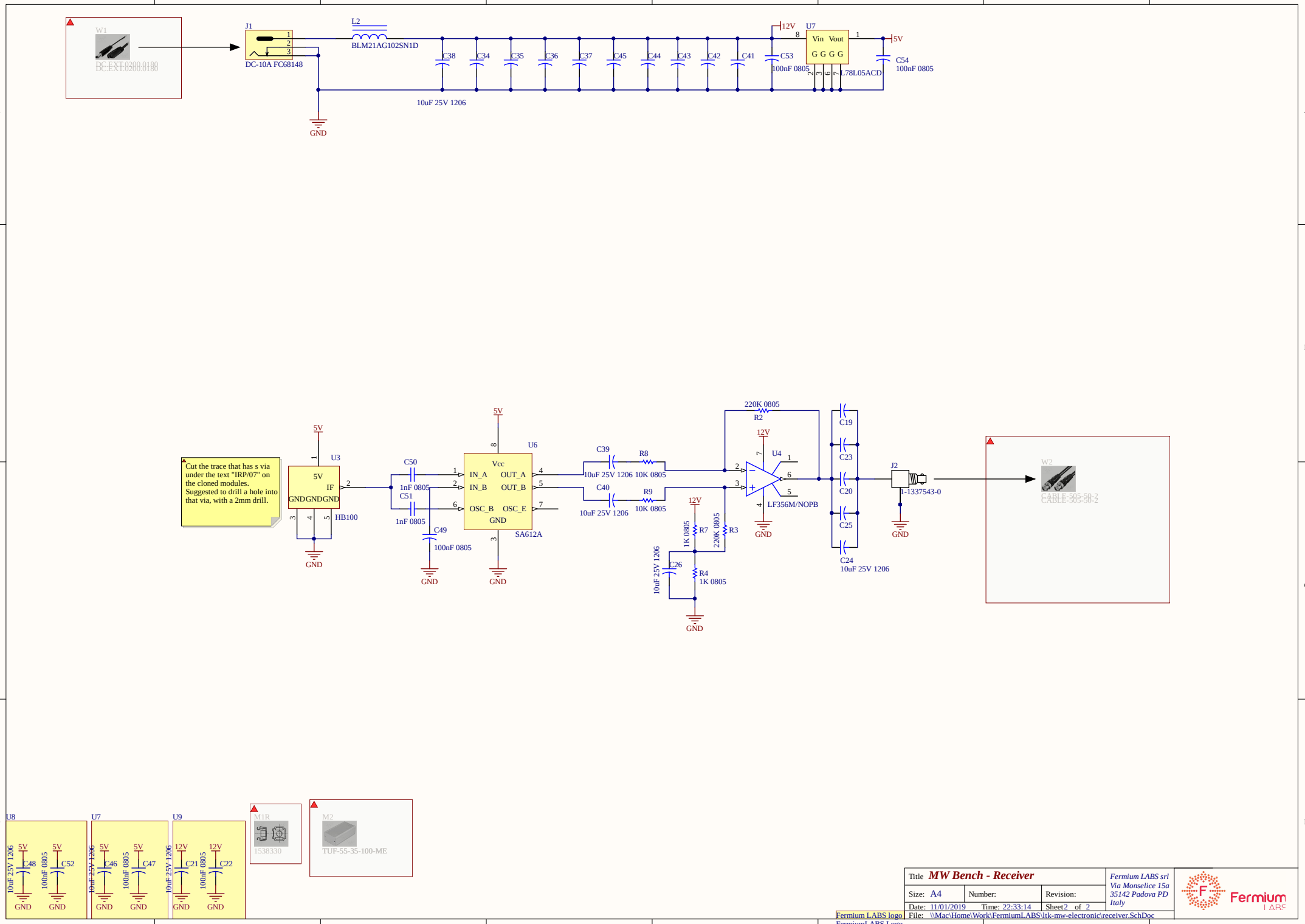


| | | | |
|---|---|---|---|
| Title | *MW Bench - Receiver* | | *Fermium LABS srl*<br>*Via Monselice 15a*<br>*35142 Padova PD*<br>*Italy* |
| Size: A4 | Number: | Revision: | |
| Date: 11/01/2019 | Time: 22:33:14 | Sheet2 of 2 | |
| File: \\Mac\Home\Work\FermiumLABS\ltk-mw-electronic\receiver.SchDoc | | | |

Fermium LABS logo
FermiumLABS Logo

U_receiver
receiver.SchDoc

U_transmitter
transmitter.SchDoc

| | | |
|---|---|---|
| Title | | |
| Size A | Number | Revision |
| Date: 11/01/2019 | | Sheet of |
| File: \\..\Combined.SchDoc | | Drawn By: |