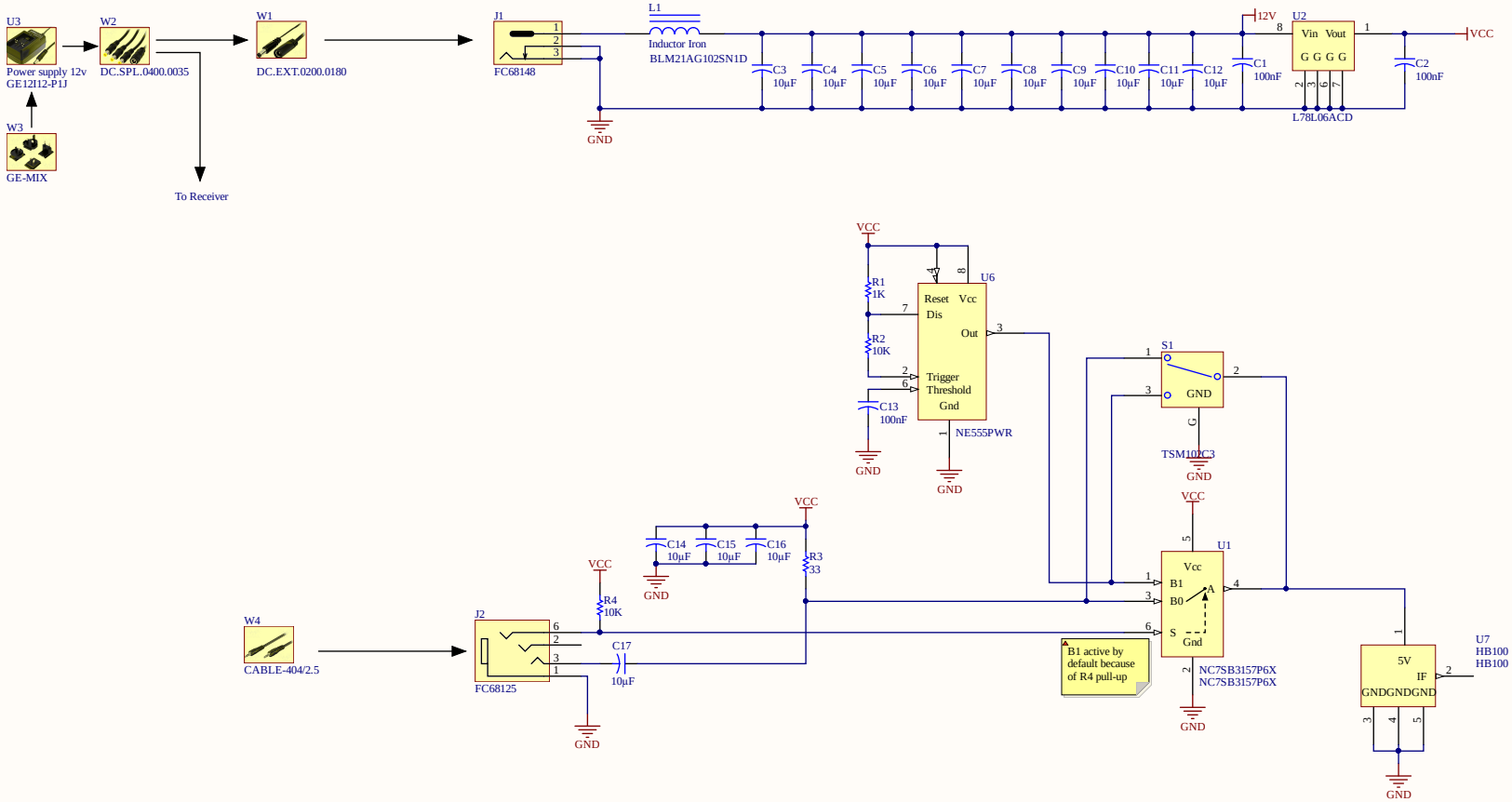

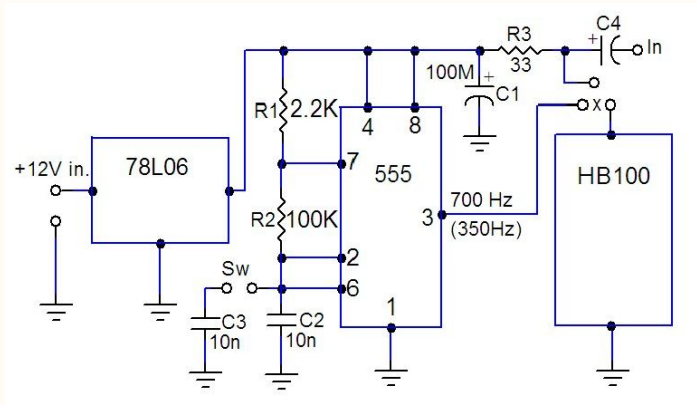

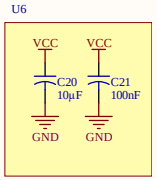

Title	**MW Bench - Transmitter**		*Fermium LABS srl* *Via Monselice 15a* *35142 Padova PD* *Italy*
Size: A4	Number:	Revision:	
Date: 14/10/2017	Time: 18:54:09	Sheet 1 of 2	
File:	\\Mac\Home\Downloads\ltk-mw-electronic\boards\transmitter.SchDoc		

Fermium LABS