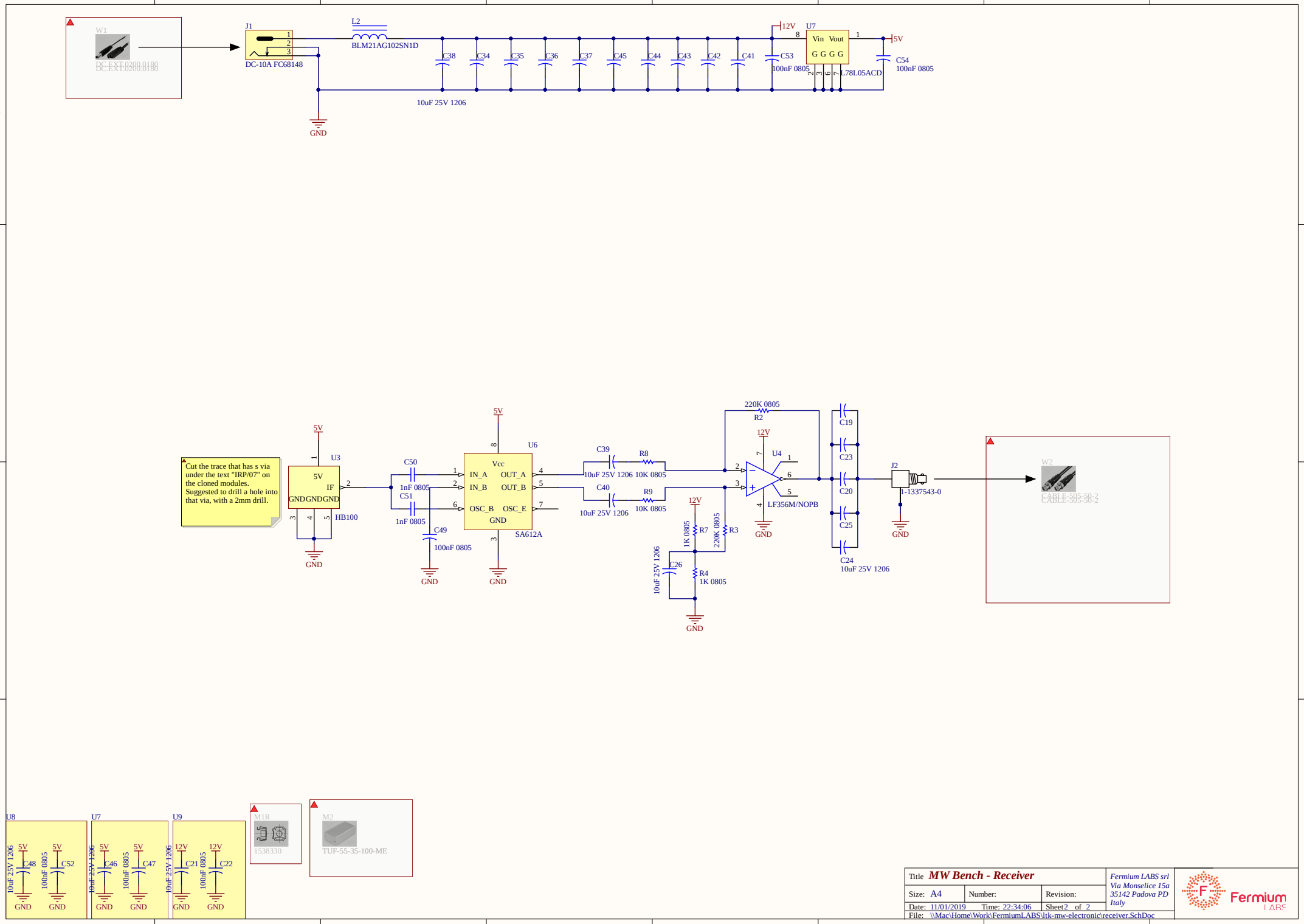

Title	**MW Bench - Receiver**		*Fermium LABS srl* *Via Monselice 15a* *35142 Padova PD* *Italy*
Size: A4	Number:	Revision:	
Date: 11/01/2019	Time: 22:34:06	Sheet2 of 2	
File: \\Mac\Home\Work\FermiumLABS\ltk-mw-electronic\receiver.SchDoc			

Fermium LABS