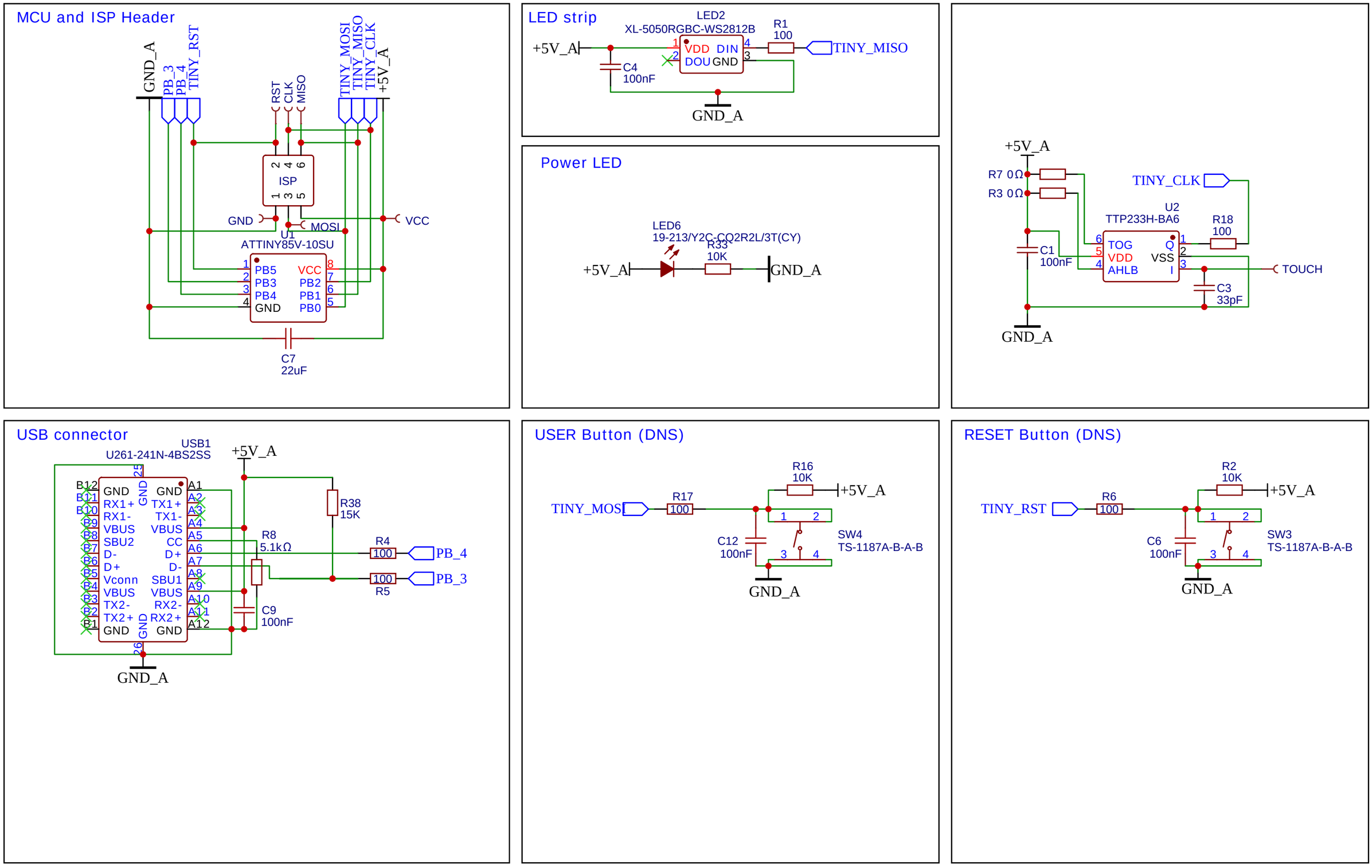

TITLE: ATtiny Stick	REV: C
Company: Sonocotta	Sheet: 1
Date: 2022-11-25 Drawn By: andriy@sonocotta.com	