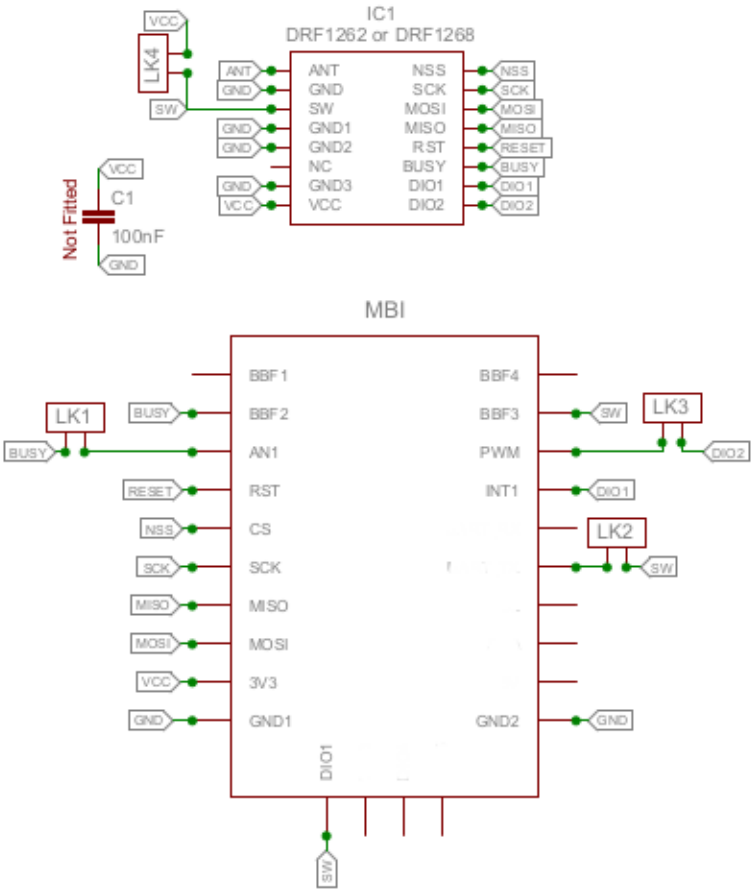
IC1
DRF1262 or DRF1268
ANT
GND
SW
GND1
GND2
NC
GND3
VCC
NSS
SCK
MOSI
MISO
RST
BUSY
DIO1
DIO2
LK4
VCC
SW
Not Fitted
C1
100nF
GND
MBI
BBF1
BBF2
AN1
RST
CS
SCK
MISO
MOSI
3V3
GND1
DIO1
BBF4
BBF3
PWM
INT1
GND2
LK1
LK2
LK3
BUSY
RESET
NSS
SCK
MISO
MOSI
VCC
GND
SW
DIO1
DIO2
GND