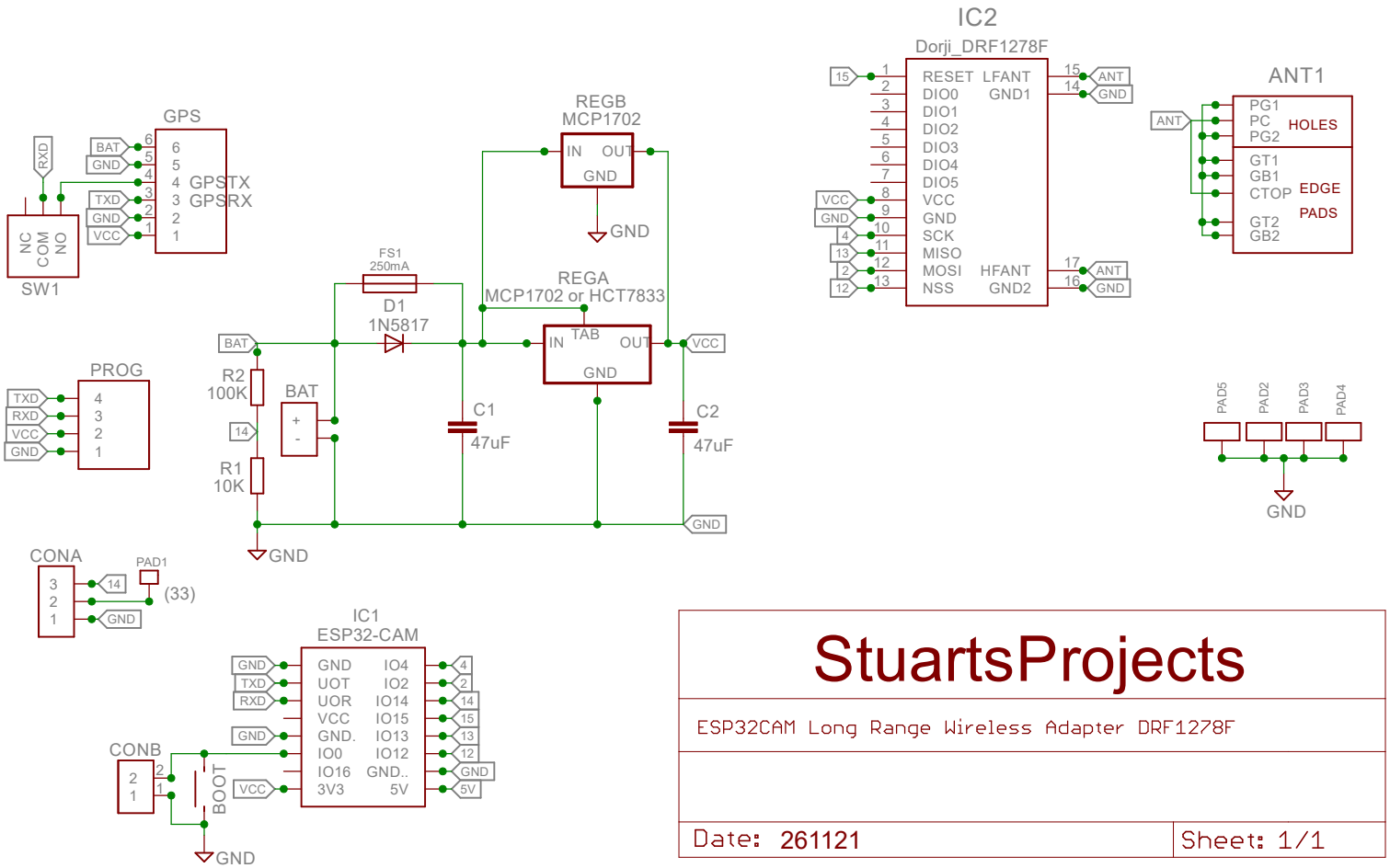

StuartsProjects

ESP32CAM Long Range Wireless Adapter DRF1278F

Date: 261121

Sheet: 1/1