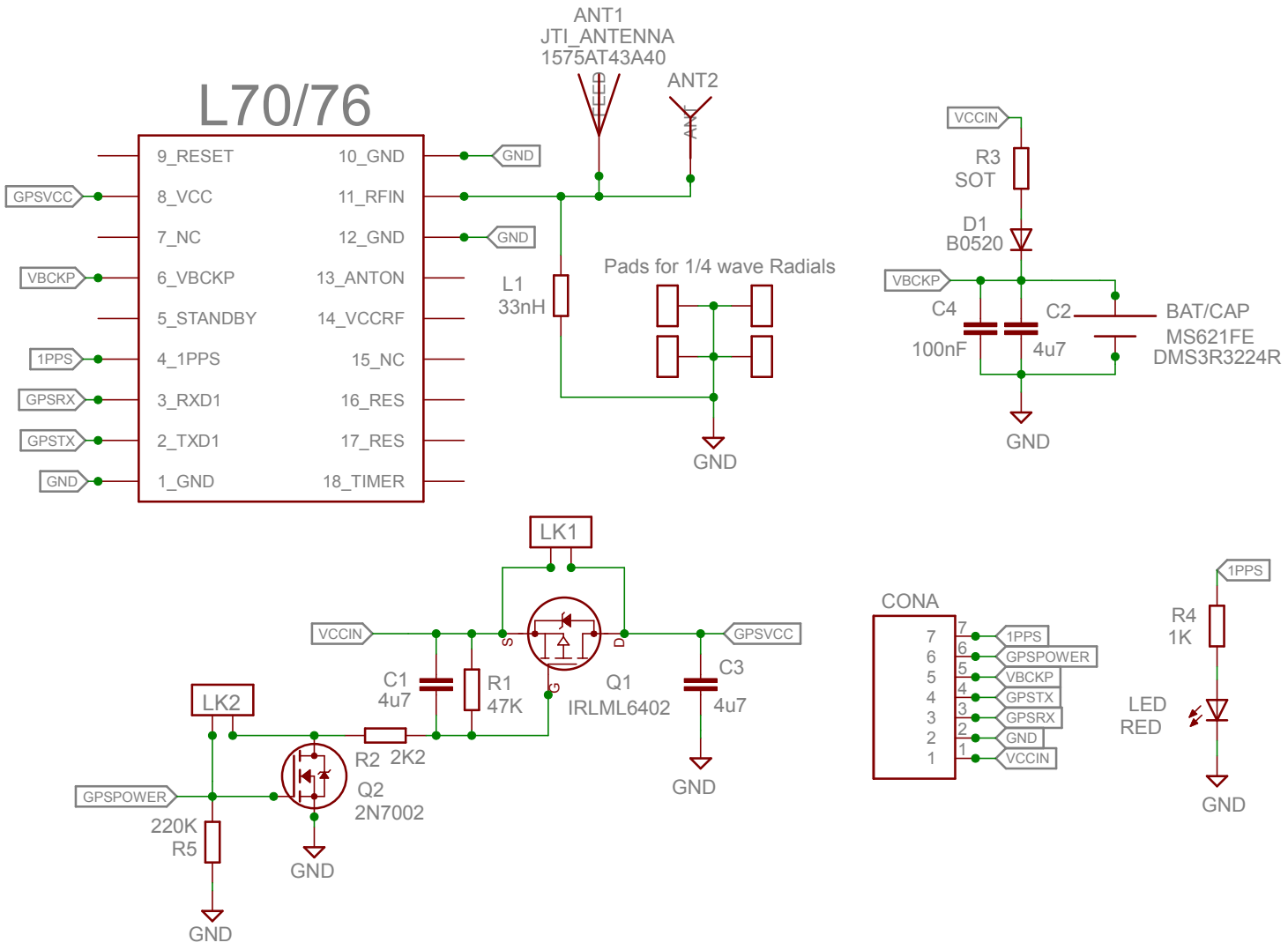

GPS Breakout 020819	
L70_L76_Breakout_V2 TITLE:	
REV:	Stuart Robinson
1/1 Sheet:	02/08/19 Date: