If no U1 or U2 are populated, this will default to LSU4.9.
LSU4.2 is when R6 + R7 = 10k ohms
LSU4.2 is when R3 = 82.5 ohms

LSU4.9 is when R6 + R7 = 31.6k ohms
LSU4.9 is when R2 + R3 = 301 ohms, we have 32.5 + 220 = 302.5

If U1 and U2 are populated, then
LSU4.9 is when J1 pins 11, 12 are +V, and
LSU4.2 is when J1 pins 11, 12 are 0V or not connected.

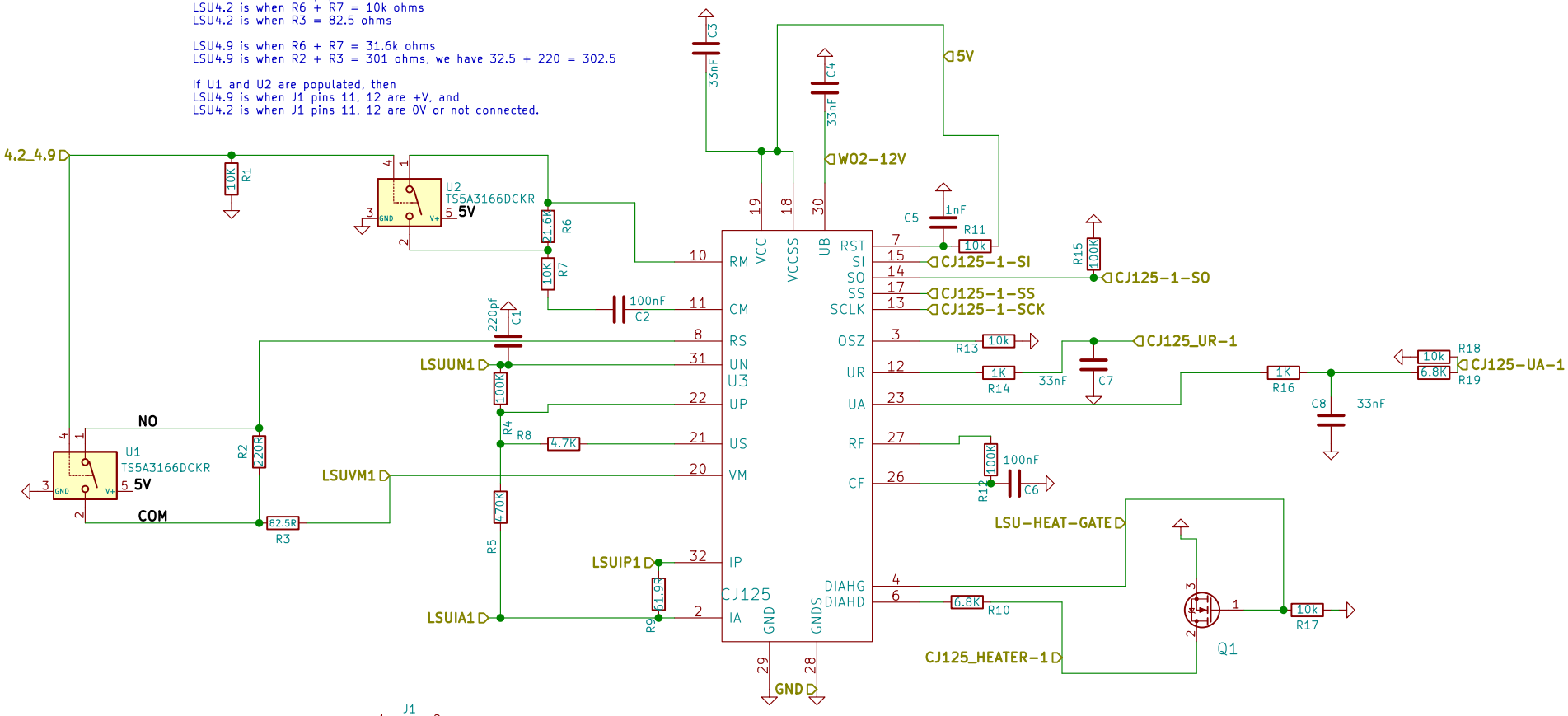


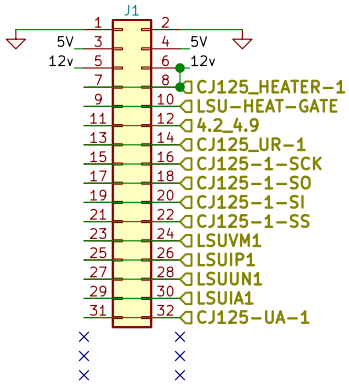


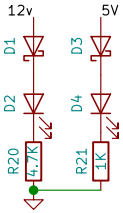


**Ruud Bilelektro for rusEFI**

Sheet: /
File: cj125_Module.sch

***Title: Wideband Module***

| | | |
|---|---|---|
| Size: A | Date: 2019-01-31 | **Rev: R0.1** |
| KiCad E.D.A. kicad (5.1.5)-3 | | Id: 1/1 |