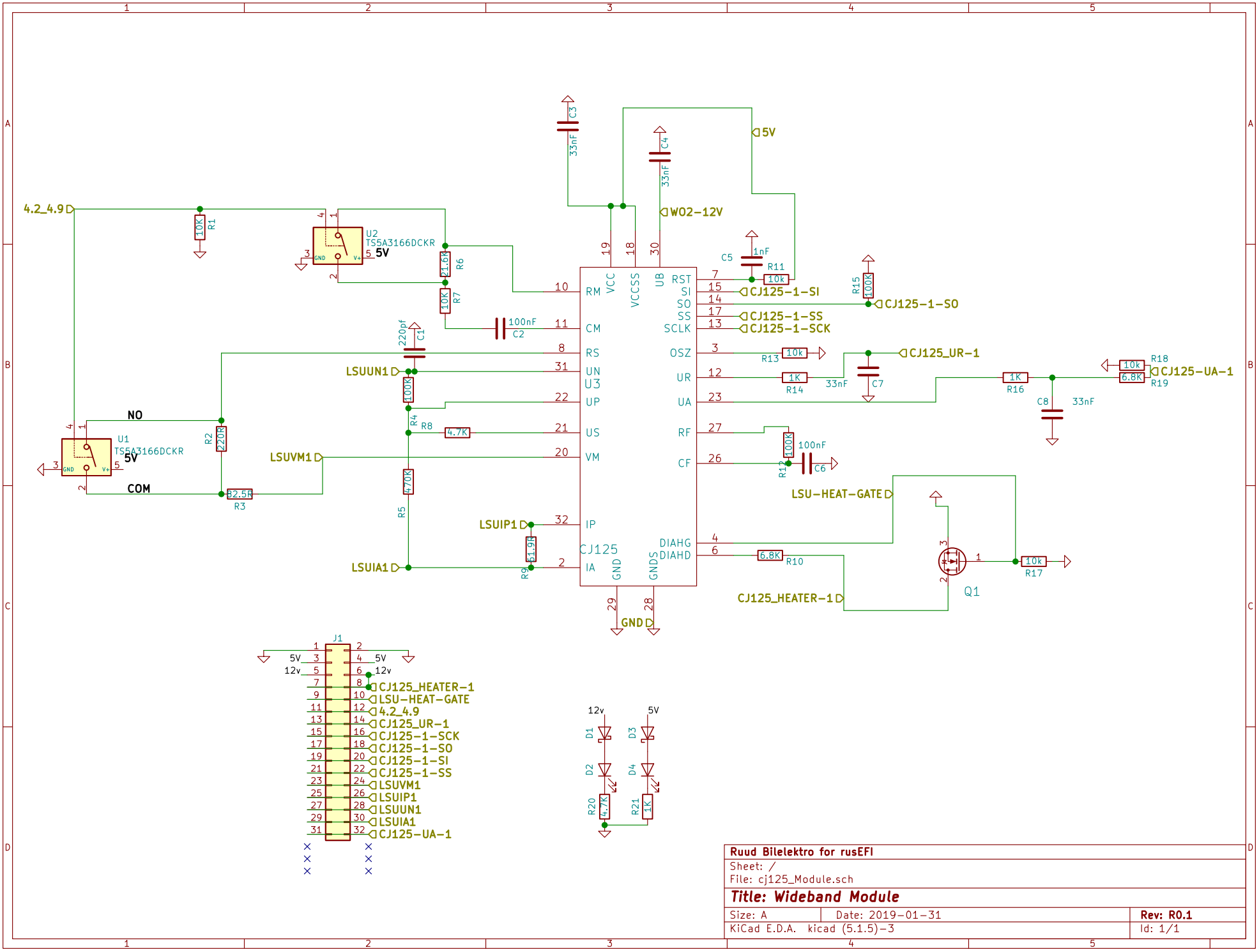

Ruud Bilelektro for rusEFI		
Sheet: /		
File: cj125_Module.sch		
Title: Wideband Module		
Size: A	Date: 2019-01-31	**Rev: R0.1**
KiCad E.D.A. kicad (5.1.5)-3		Id: 1/1