Ferre Defossez Groep 2

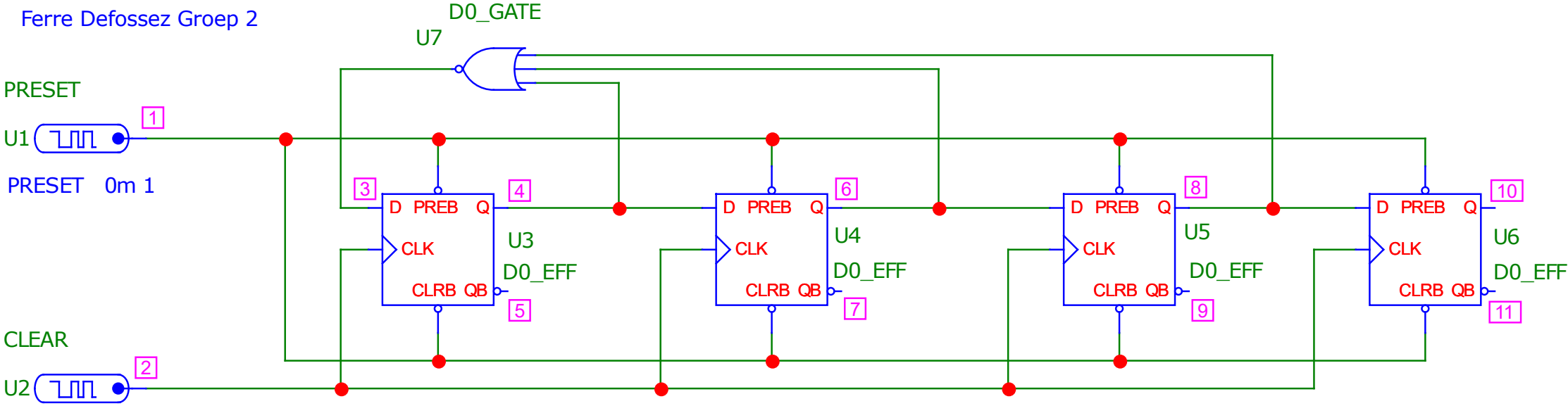

CLEAR 0m 0 LABEL=START 1m 1 2m 0 3m GOTO START -1 TIMES
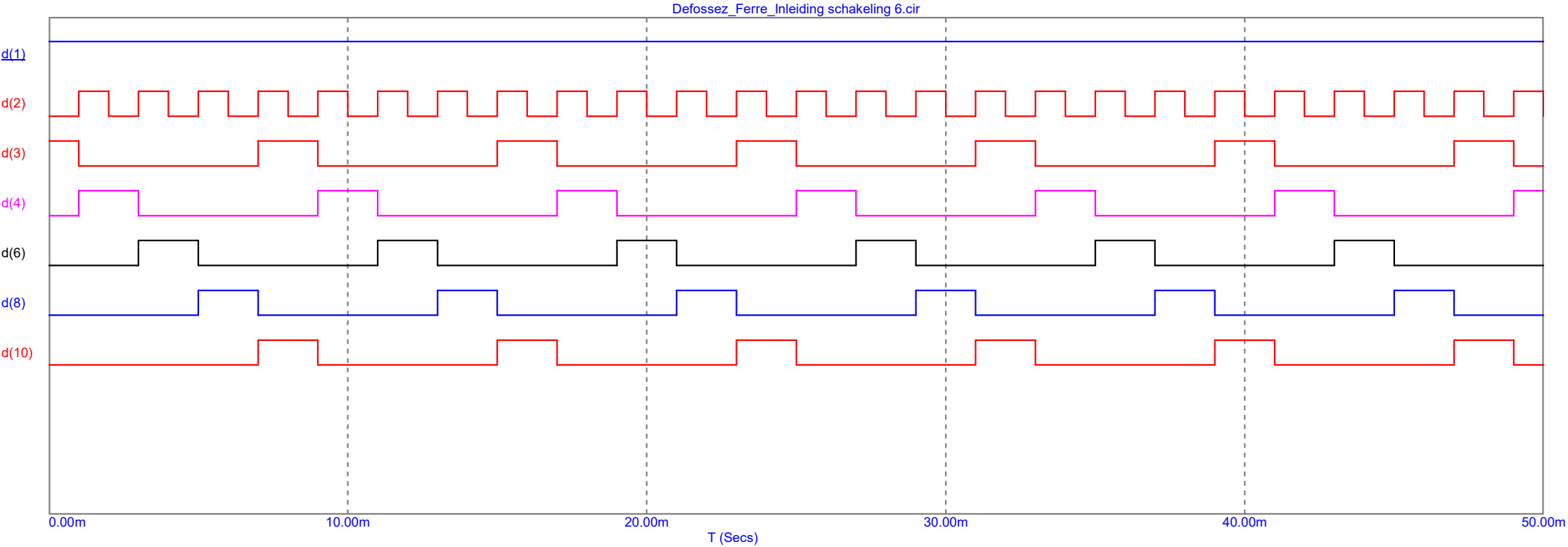
DIGINITSTATE = 1