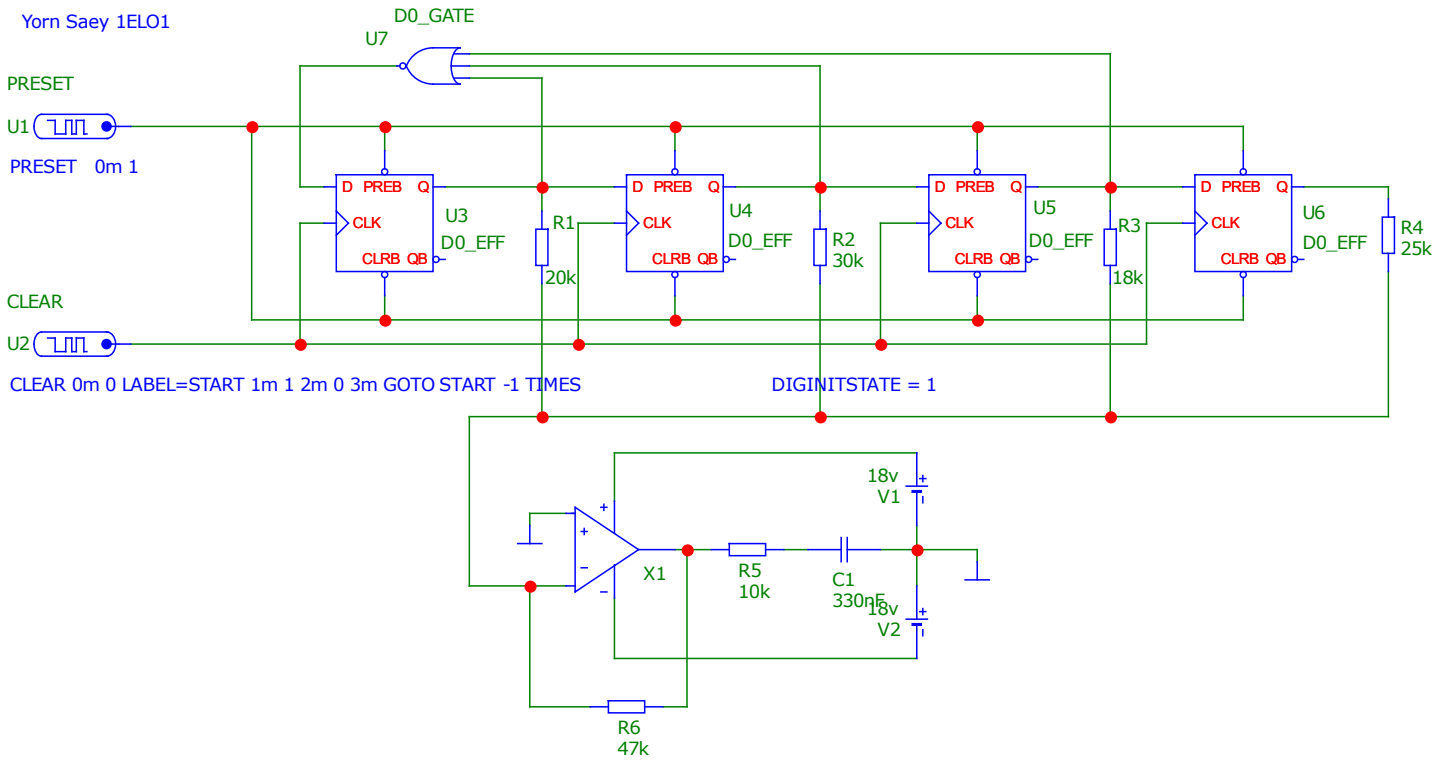
Yorn Saey 1ELO1
D0_GATE
U7
PRESET
U1
PRESET 0m 1
D PREB Q
CLK
CLRB QB
U3
D0_EFF
R1
20k
U4
R2
30k
U5
R3
18k
U6
R4
25k
CLEAR
U2
CLEAR 0m 0 LABEL=START 1m 1 2m 0 3m GOTO START -1 TIMES
DIGINITSTATE = 1
18v
V1
X1
R5
10k
C1
330nF
V2
R6
47k

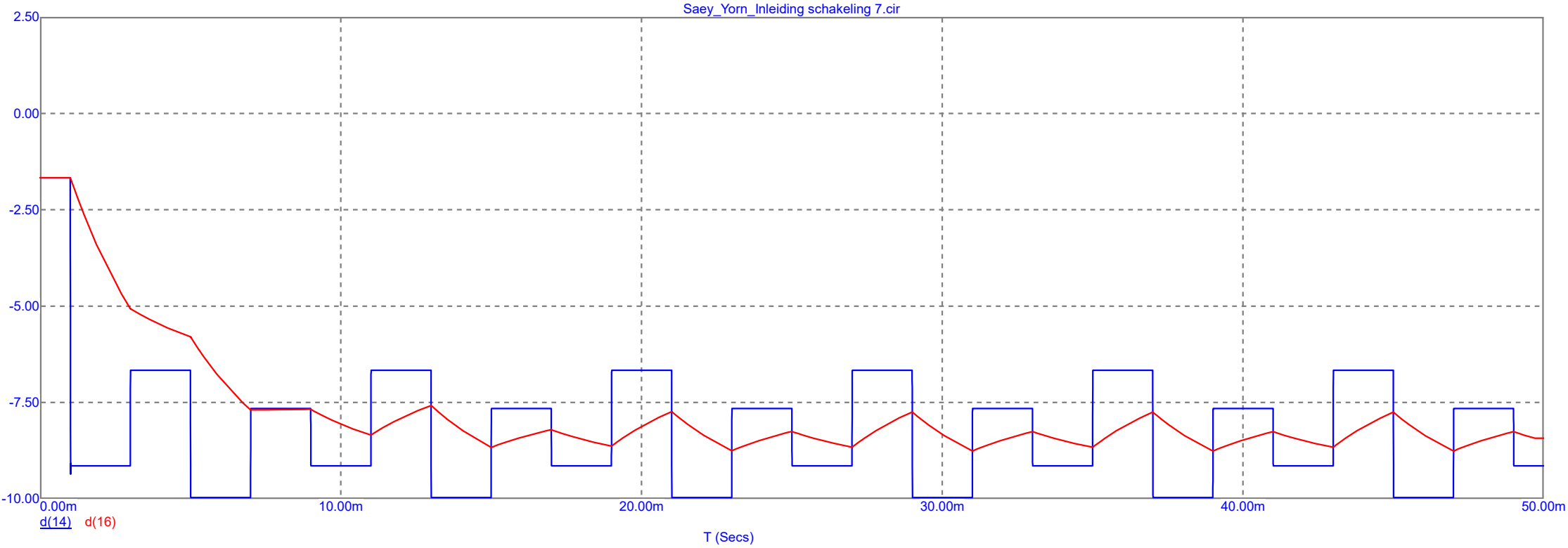
Saey_Yorn_Inleiding schakeling 7.cir
2.50
0.00
-2.50
-5.00
-7.50
-10.00
0.00m
10.00m
20.00m
30.00m
40.00m
50.00m
d(14)
d(16)
T (Secs)