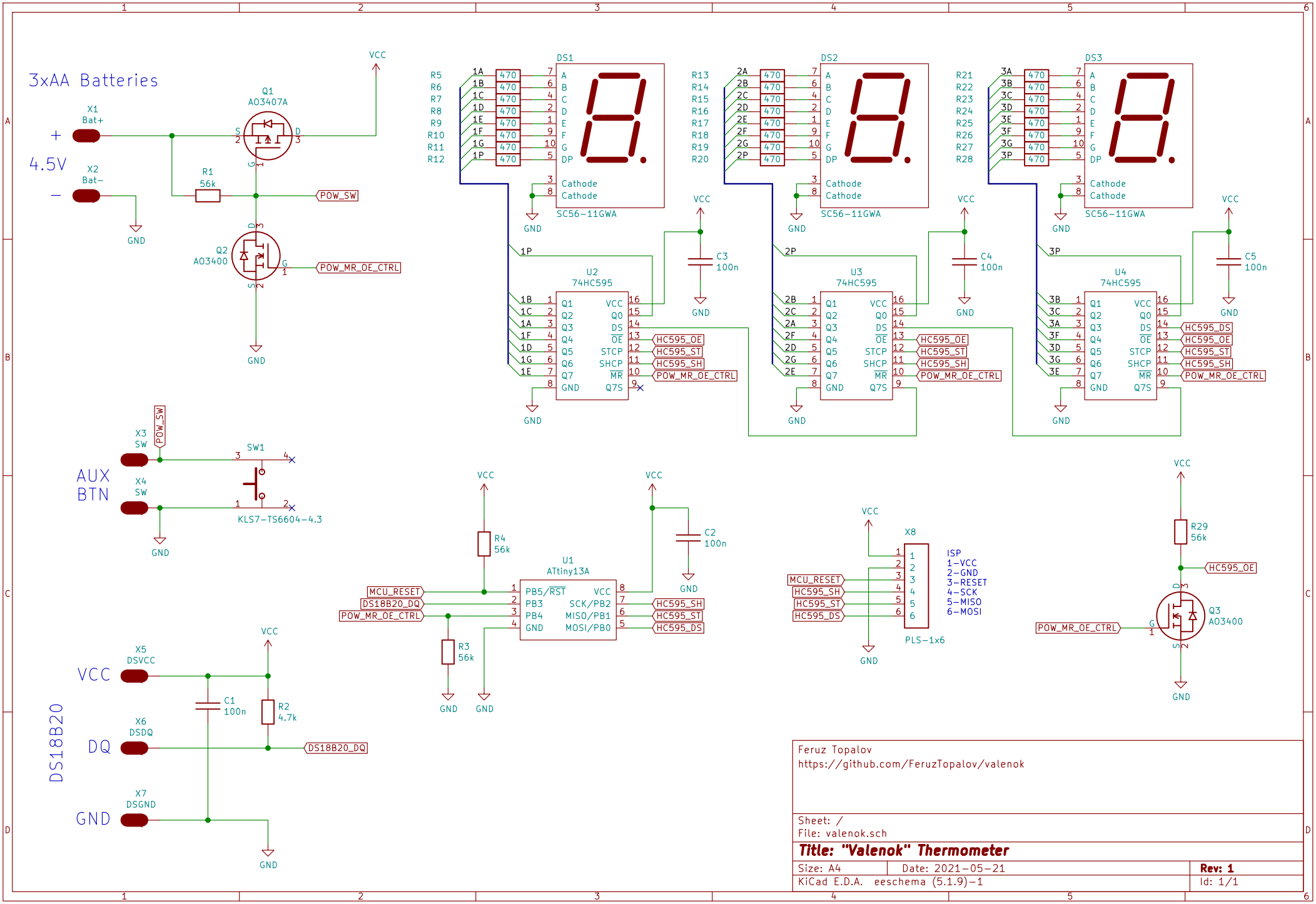
3xAA Batteries
4.5V
X1 Bat+
X2 Bat−
Q1 AO3407A
Q2 AO3400
R1 56k
POW_SW
POW_MR_OE_CTRL
VCC
GND
DS1
DS2
DS3
SC56-11GWA
Cathode
Cathode
U2 74HC595
U3 74HC595
U4 74HC595
C3 100n
C4 100n
C5 100n
HC595_OE
HC595_ST
HC595_SH
HC595_DS
AUX BTN
X3 SW
X4 SW
SW1
KLS7-TS6604-4.3
U1 ATtiny13A
PB5/RST
PB3
PB4
SCK/PB2
MISO/PB1
MOSI/PB0
MCU_RESET
DS18B20_DQ
R4 56k
R3 56k
C2 100n
X8
ISP
1-VCC
2-GND
3-RESET
4-SCK
5-MISO
6-MOSI
PLS-1x6
R29 56k
Q3 AO3400
DS18B20
VCC
DQ
GND
X5 DSVCC
X6 DSDQ
X7 DSGND
C1 100n
R2 4.7k
Feruz Topalov
https://github.com/FeruzTopalov/valenok
Sheet: /
File: valenok.sch
Title: "Valenok" Thermometer
Size: A4
Date: 2021-05-21
Rev: 1
KiCad E.D.A. eeschema (5.1.9)-1
Id: 1/1