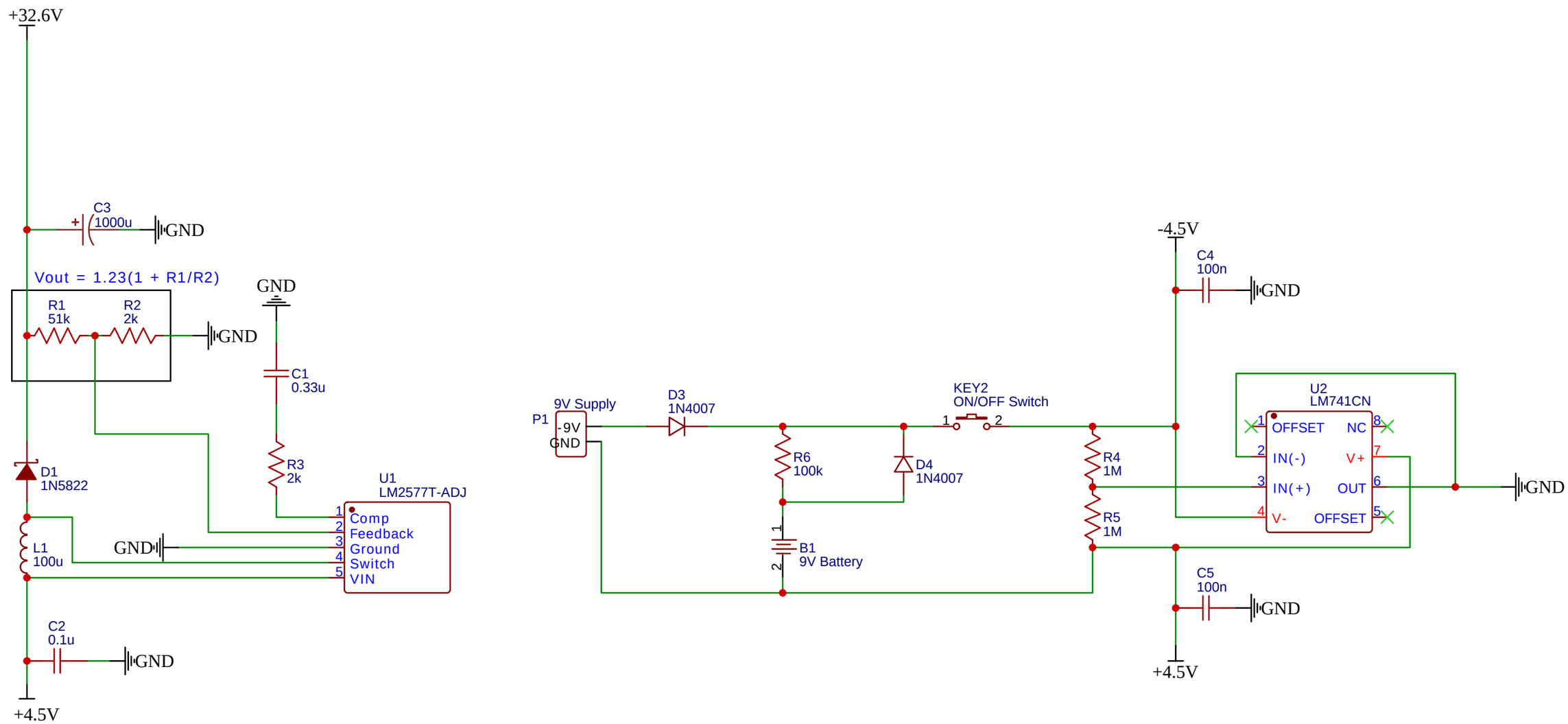

TITLE: Power Supply		REV: 1.0
	Company:	Sheet: 1/1
	Date: 2023-11-07 Drawn By: Joshua Pinti	

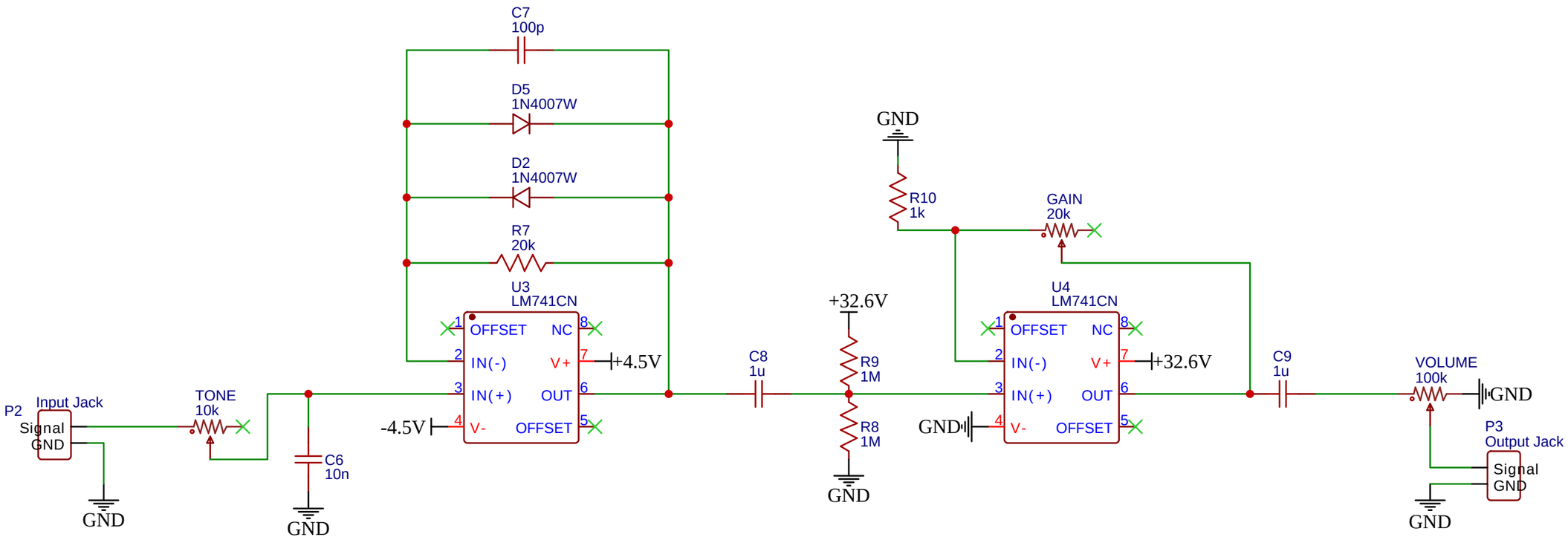

TITLE: Signal Circuit	REV: 1.0
Company:	Sheet: 1/1
Date: 2023-11-07 Drawn By: Joshua Pinti	