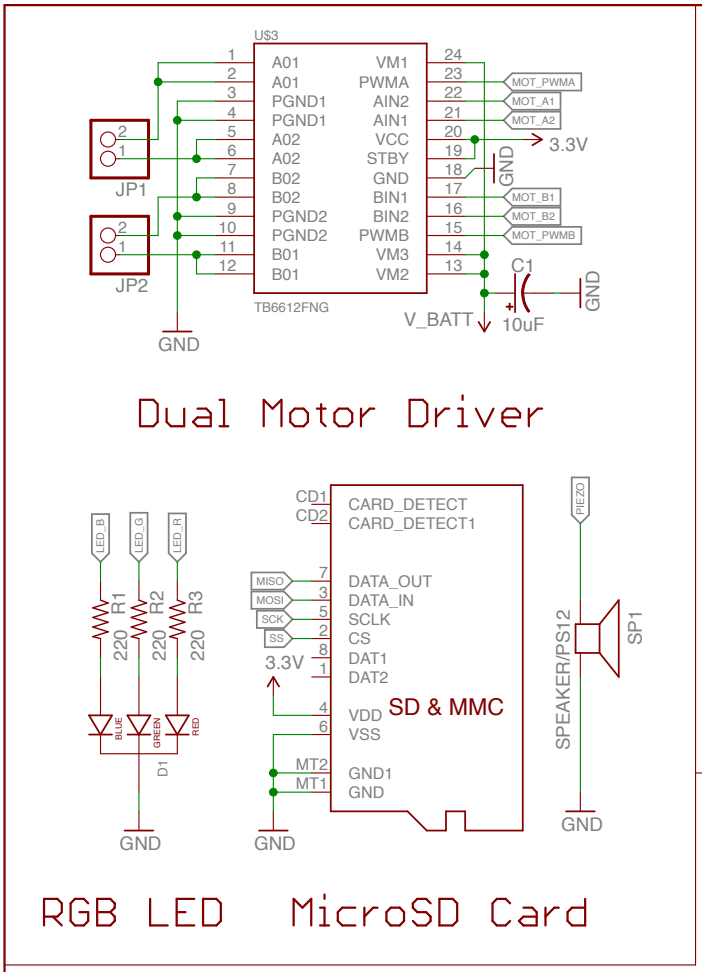

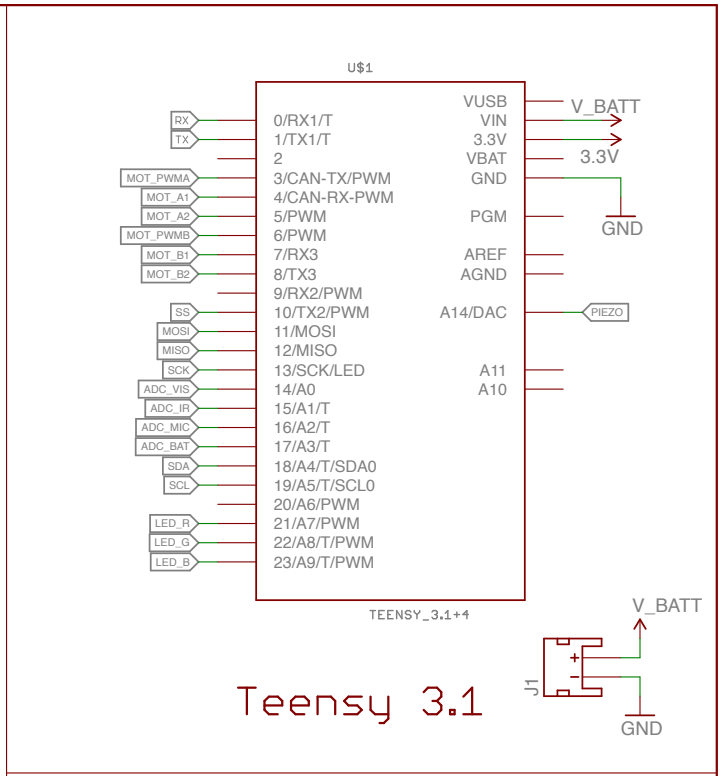

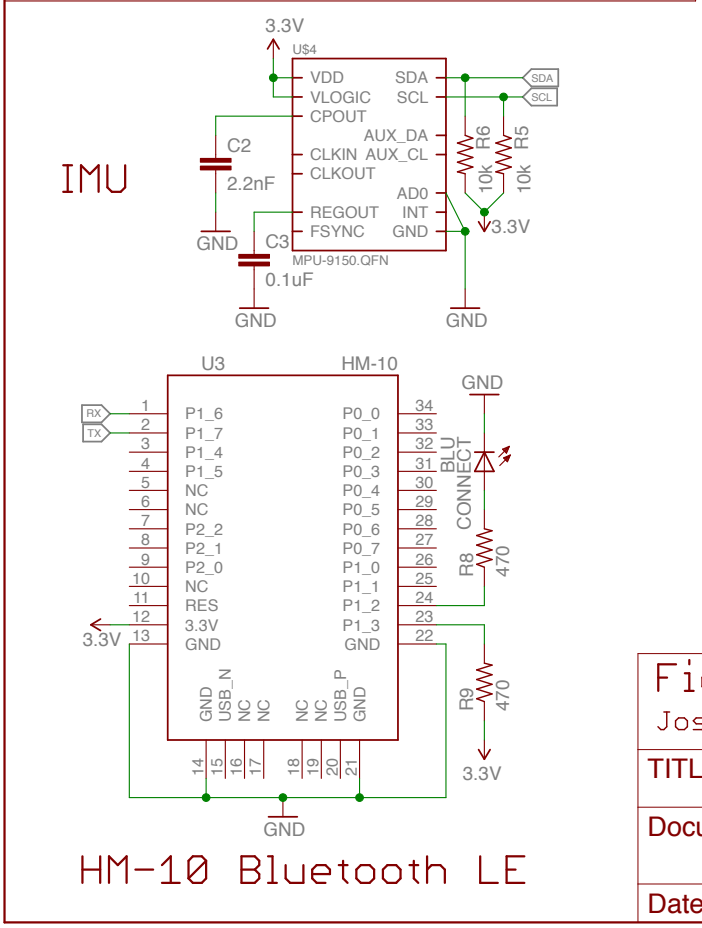

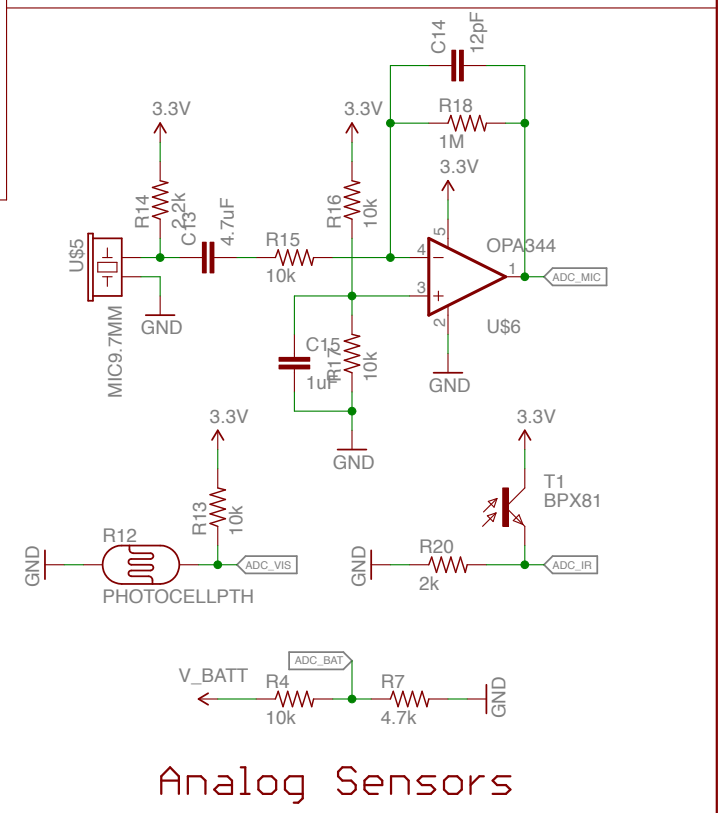

Fido Prototype PCB

Joshua Gruenstein and Michael Truell

TITLE: FidoBark	
Document Number:	REV: 1.0
Date: 8/30/15 10:18 PM	Sheet: 1/1