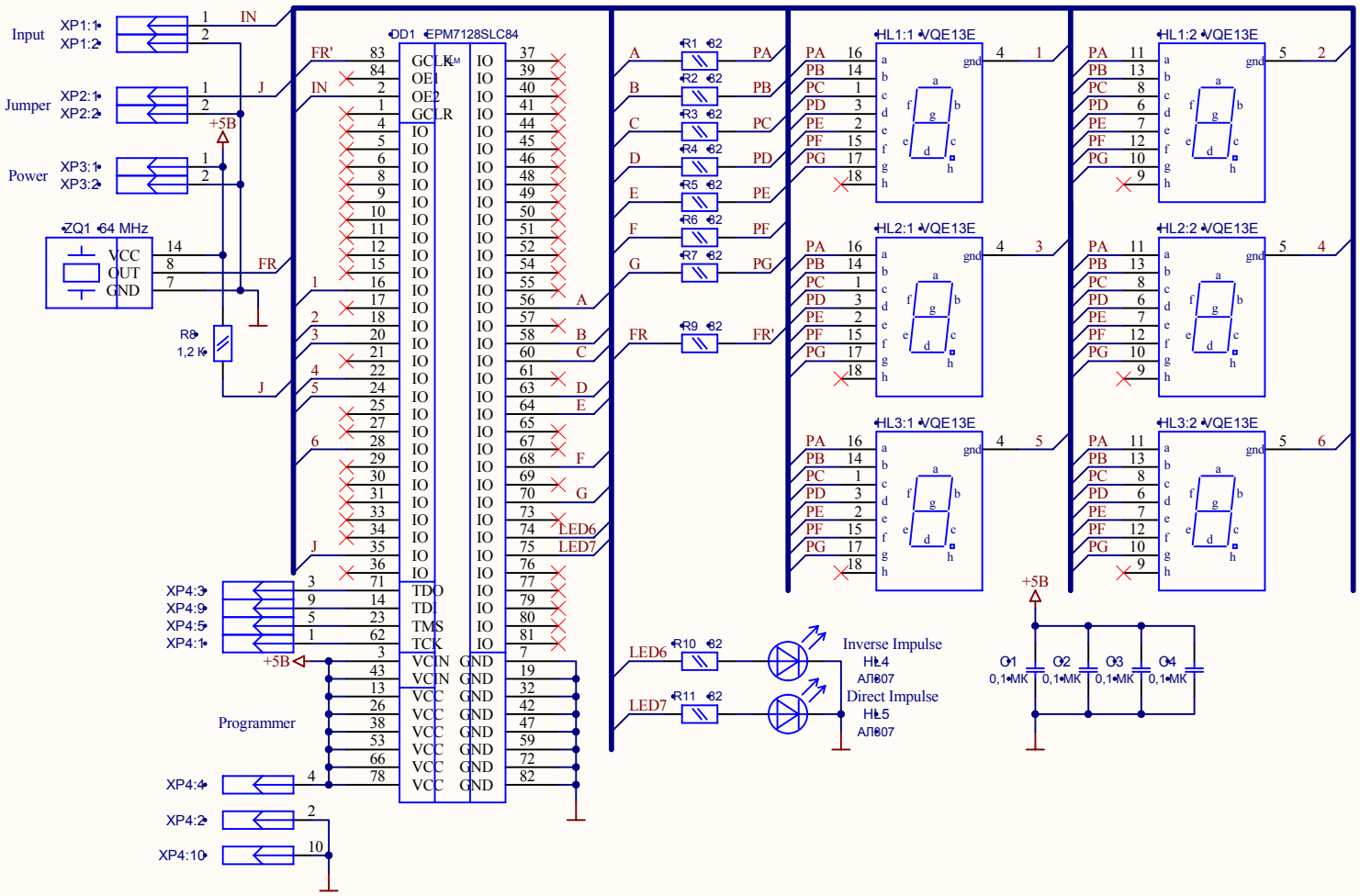

Title		
Size A4	Number	Revision
Date: 29.07.2011		Sheet of
File: C:\Program Files\..\Counter.SchDoc		Drawn By: