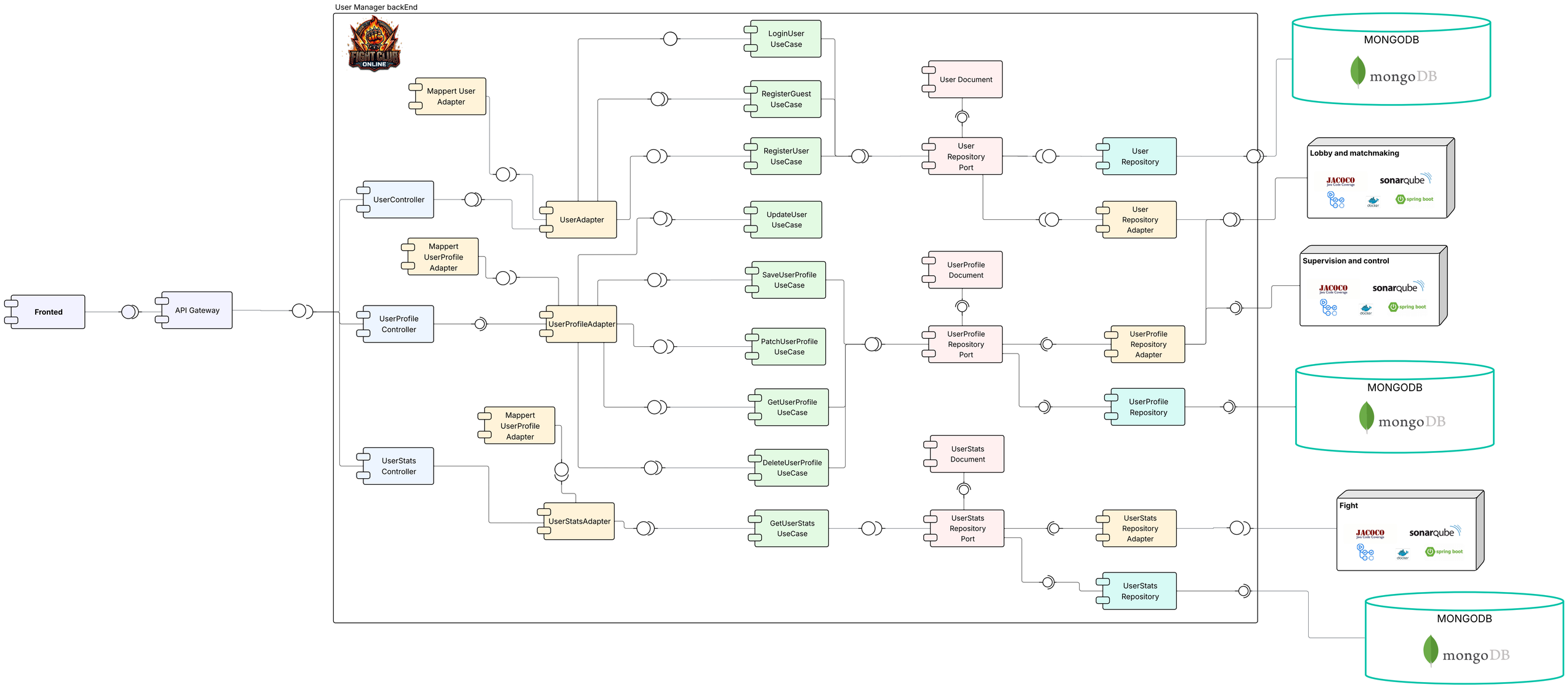
User Manager backEnd
Fronted
API Gateway
UserController
UserProfile Controller
UserStats Controller
Mappert User Adapter
Mappert UserProfile Adapter
Mappert UserProfile Adapter
UserAdapter
UserProfileAdapter
UserStatsAdapter
LoginUser UseCase
RegisterGuest UseCase
RegisterUser UseCase
UpdateUser UseCase
SaveUserProfile UseCase
PatchUserProfile UseCase
GetUserProfile UseCase
DeleteUserProfile UseCase
GetUserStats UseCase
User Document
User Repository Port
UserProfile Document
UserProfile Repository Port
UserStats Document
UserStats Repository Port
User Repository
User Repository Adapter
UserProfile Repository Adapter
UserProfile Repository
UserStats Repository Adapter
UserStats Repository
MONGODB
mongoDB
Lobby and matchmaking
JACOCO
sonarqube
spring boot
Supervision and control
JACOCO
sonarqube
spring boot
MONGODB
mongoDB
Fight
JACOCO
sonarqube
spring boot
MONGODB
mongoDB