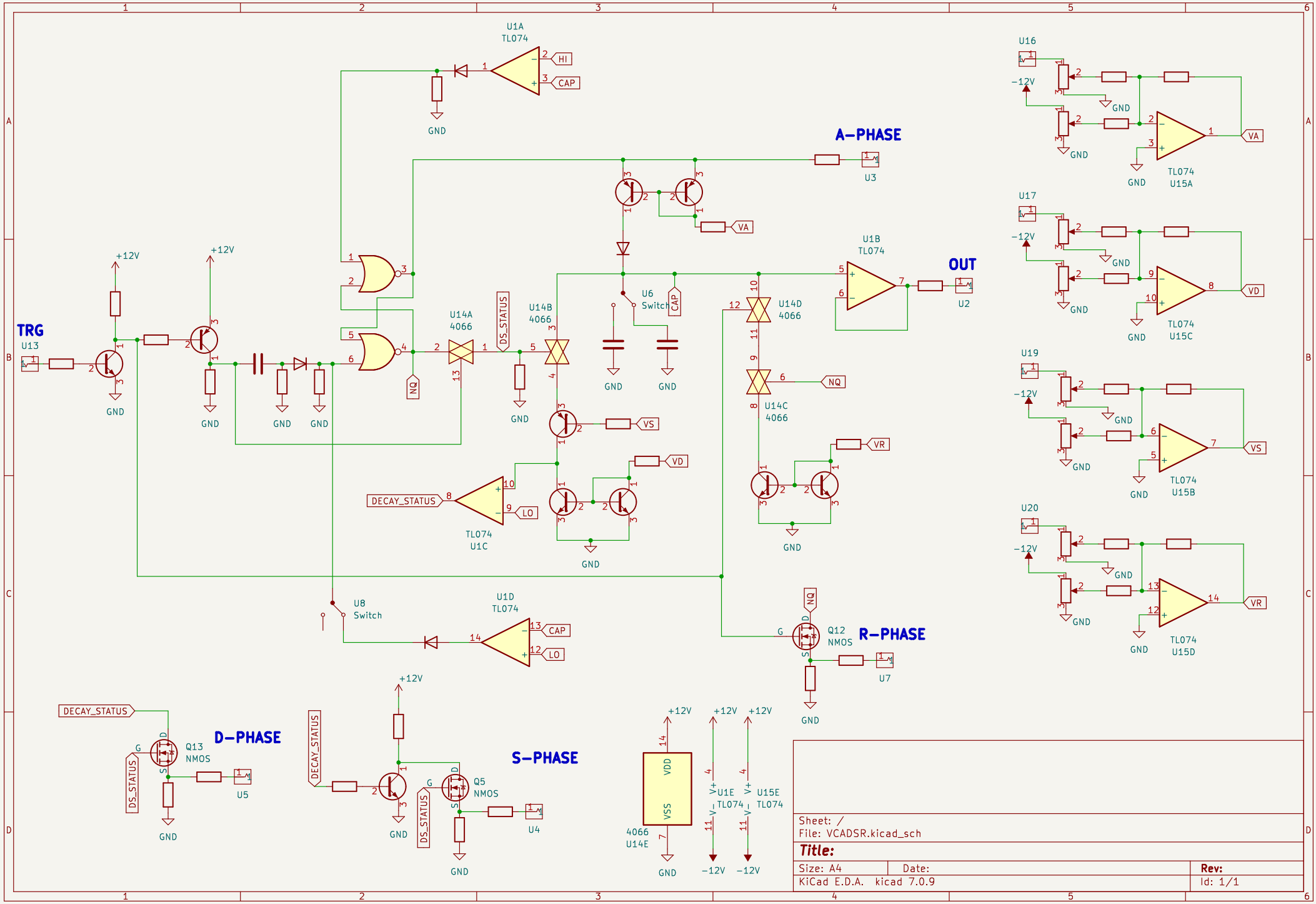

Sheet: /
File: VCADSR.kicad_sch

Title:

Size: A4 | Date: | **Rev:**
KiCad E.D.A. kicad 7.0.9 | Id: 1/1