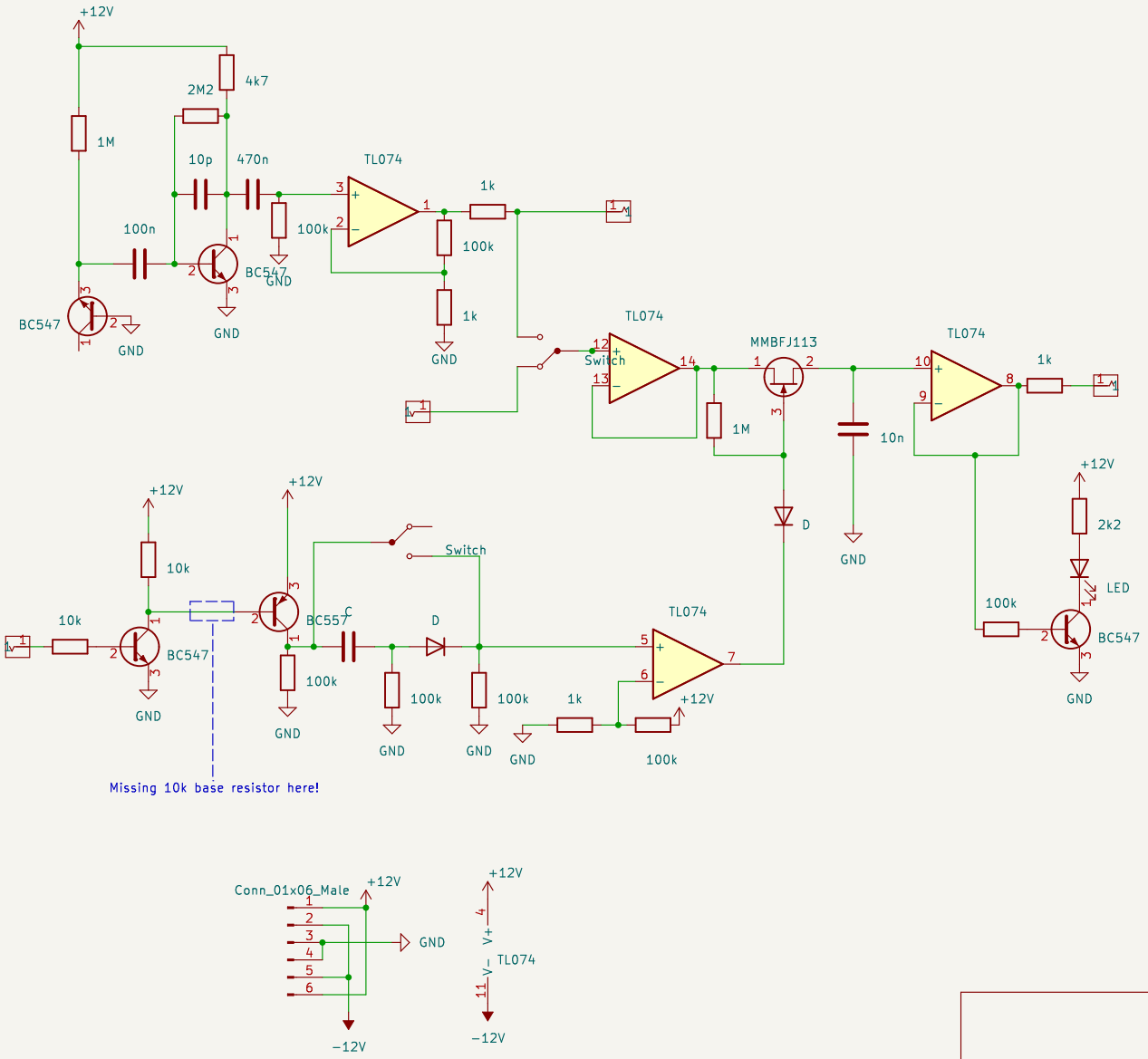

Sheet: /
File: SAH-TAH.kicad_sch

Title: SAH & TAH by github.com/Fihdi

Size: A4	Date:	Rev:
KiCad E.D.A. kicad 7.0.9		Id: 1/1