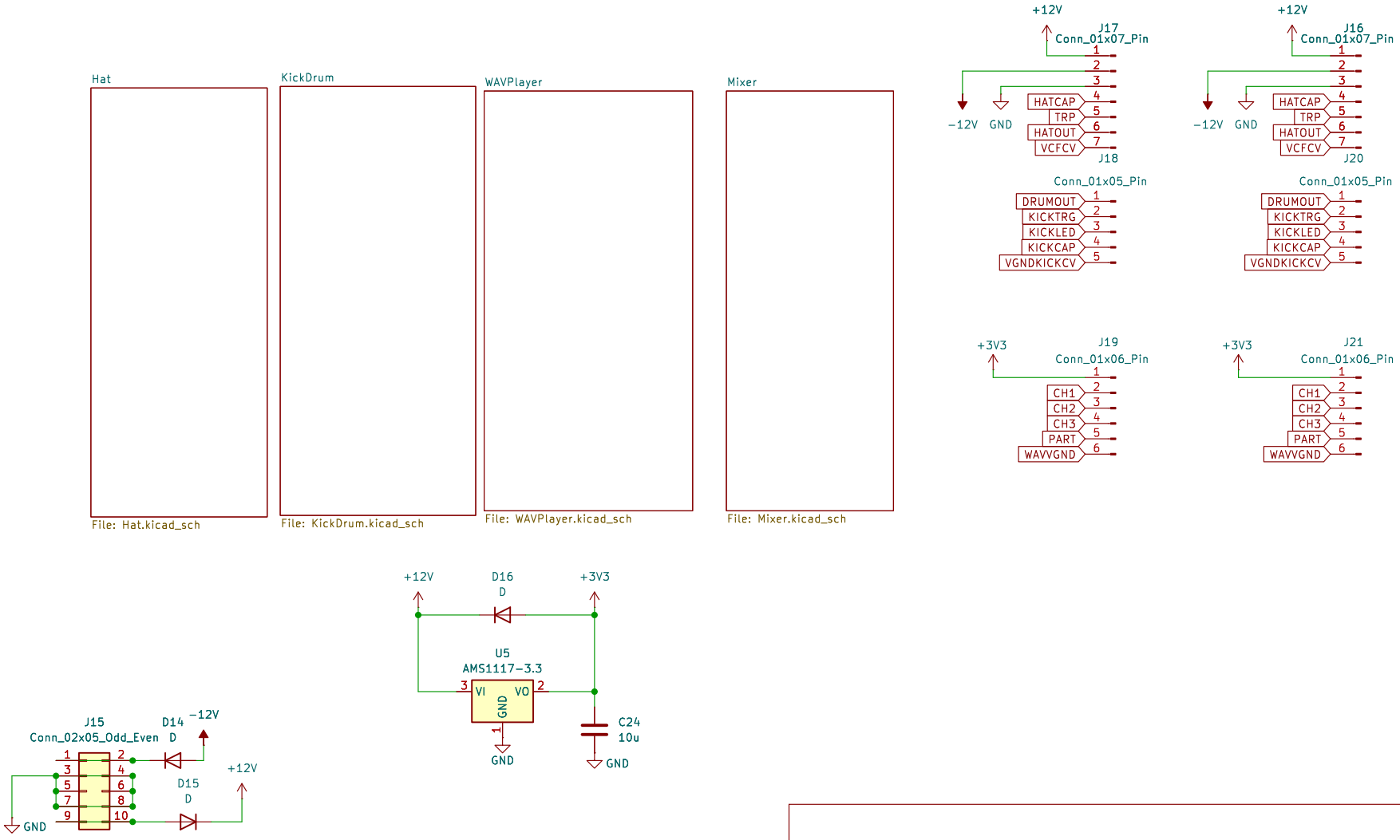

Sheet: /
File: MiniDrumkit2.kicad_sch

Title: MiniDrumkit2 by github.com/Fihdi

Size: A4	Date:	Rev:
KiCad E.D.A. 9.0.7		Id: 1/5

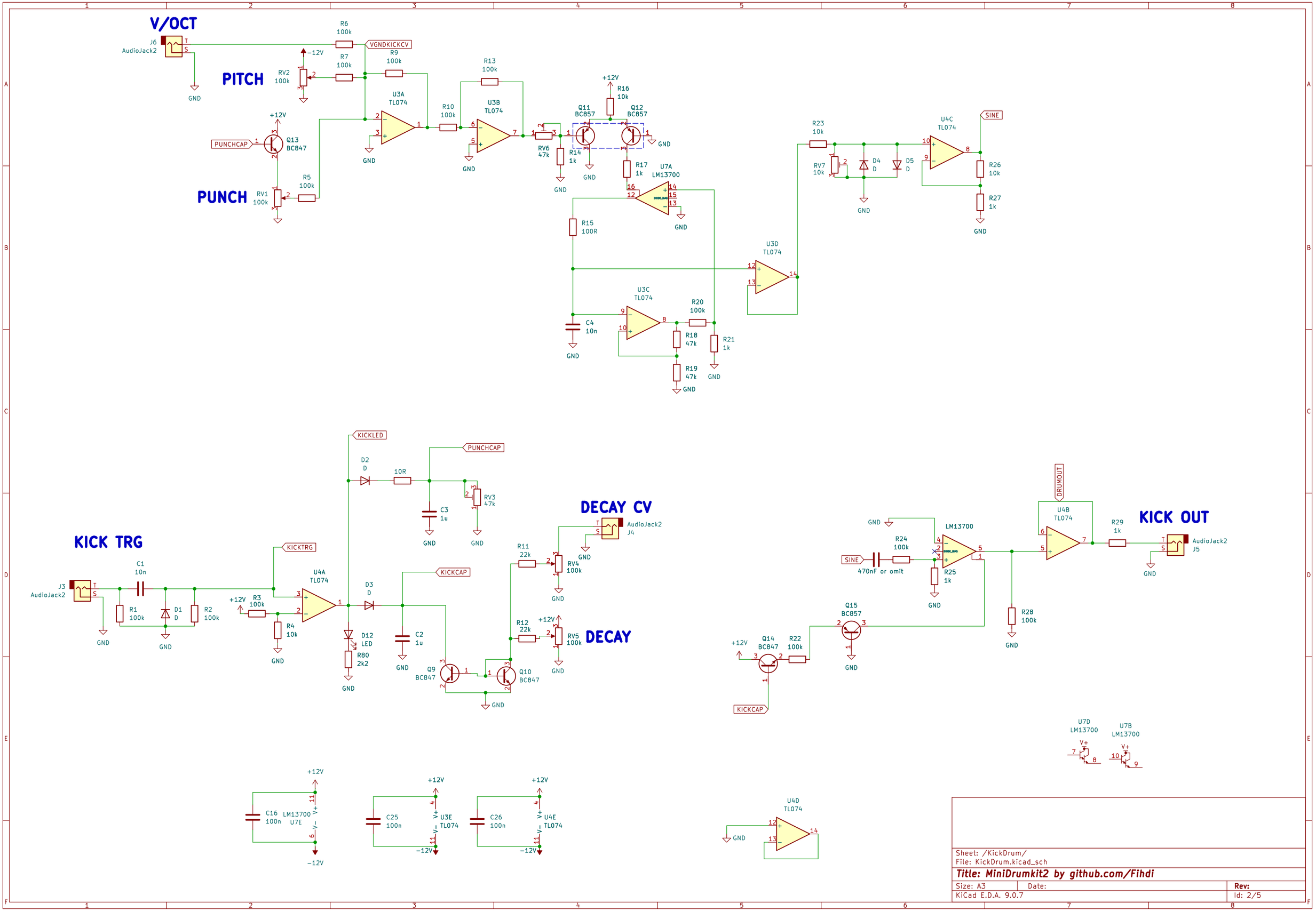

Sheet: /KickDrum/
File: KickDrum.kicad_sch

Title: MiniDrumkit2 by github.com/Fihdi

Size: A3	Date:	Rev:
KiCad E.D.A. 9.0.7		Id: 2/5

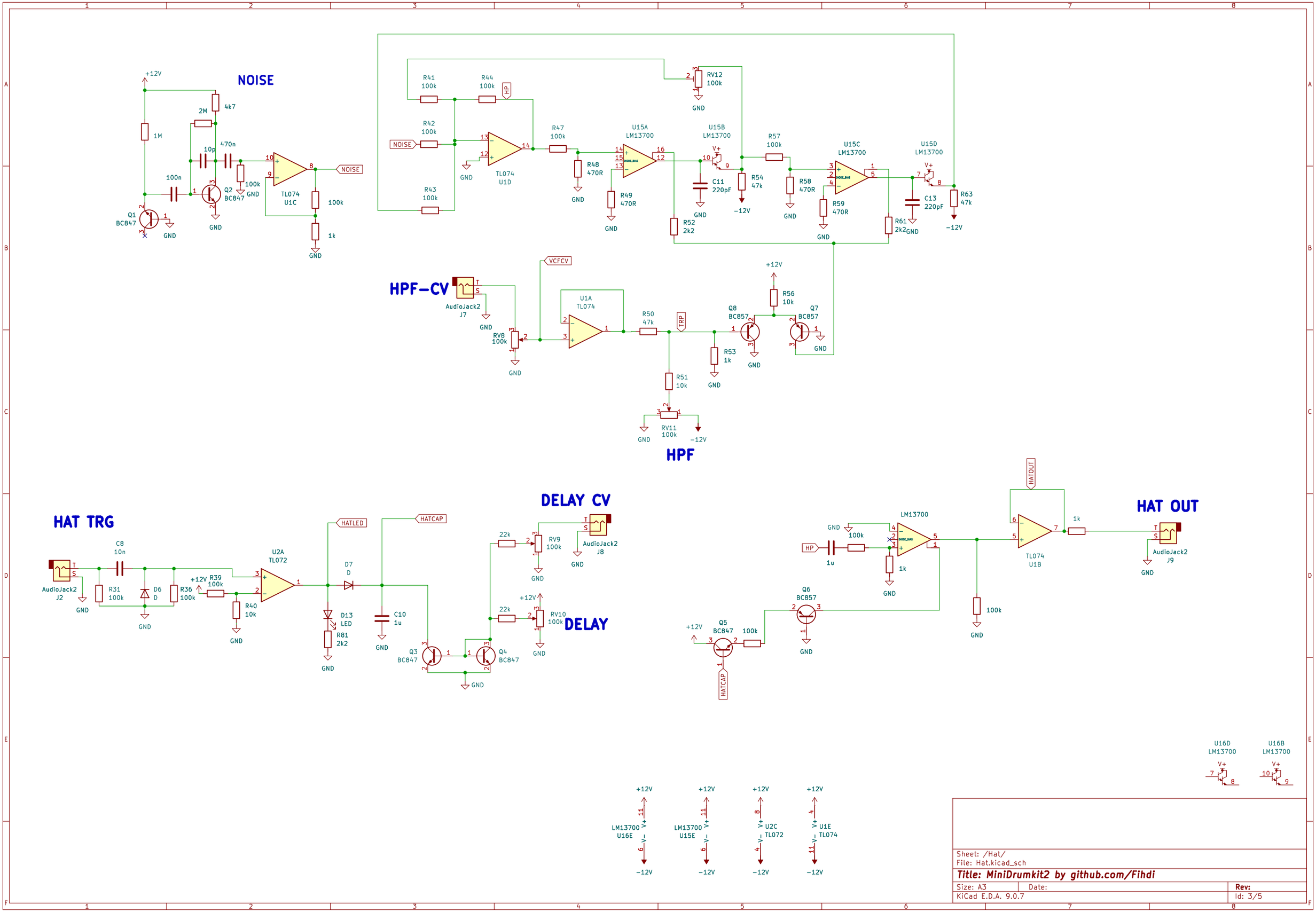

Sheet: /Hat/
File: Hat.kicad_sch

Title: MiniDrumkit2 by github.com/Fihdi

Size: A3	Date:	Rev:
KiCad E.D.A. 9.0.7		Id: 3/5

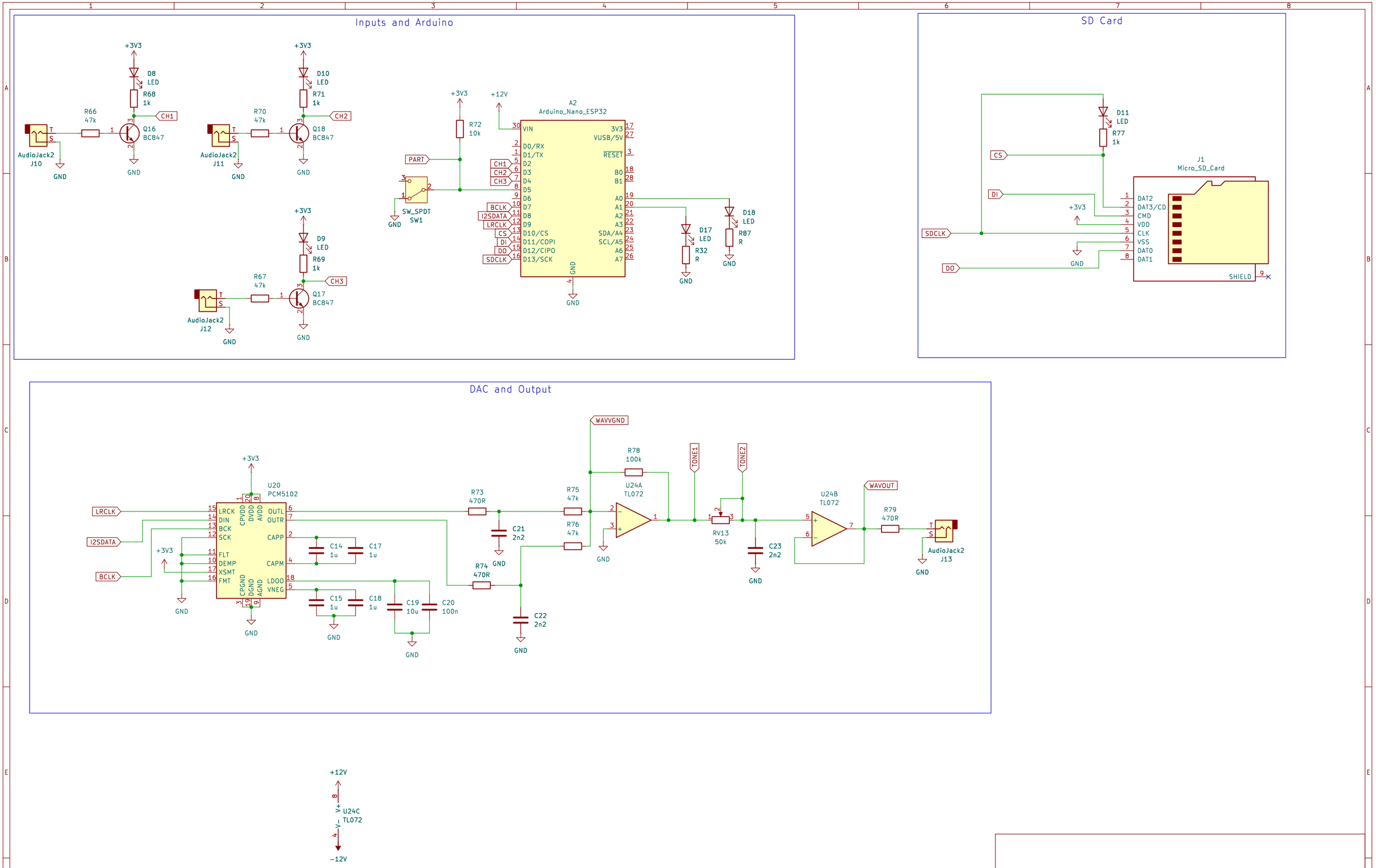

Sheet: /WAVPlayer/
File: WAVPlayer.kicad_sch

Title: MiniDrumkit2 by github.com/Fihdi

Size: A3	Date:	Rev:
KiCad E.D.A. 9.0.7		Id: 5/5

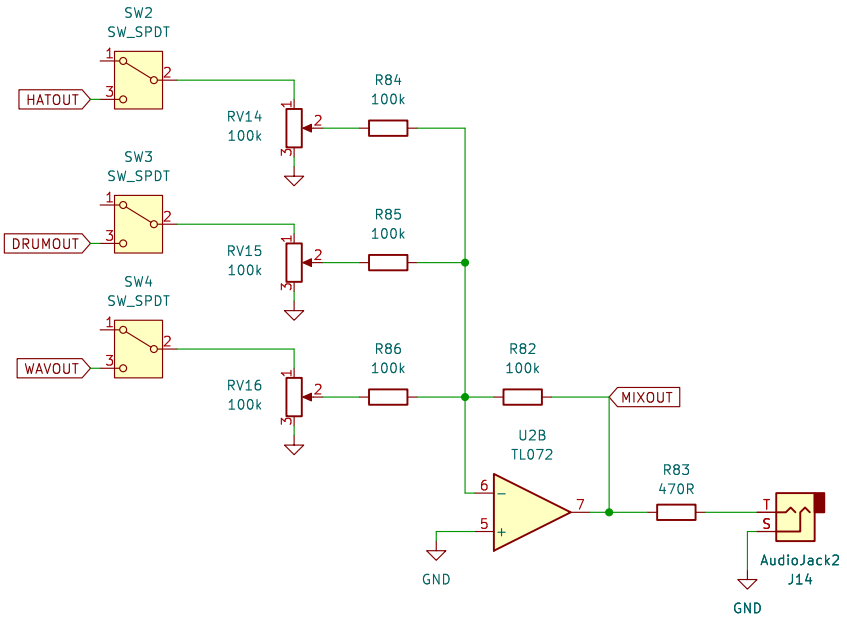

Sheet: /Mixer/
File: Mixer.kicad_sch

Title: MiniDrumkit2 by github.com/Fihdi

Size: A4	Date:	Rev:
KiCad E.D.A. 9.0.7		Id: 5/5