Universidade de Coimbra
Faculdade de Ciências e Tecnologia
Departamento de Engenharia Informática

Segurança em Tecnologias da Informação

Project 1 – OpenVPN and Certificates

Teachers

António Jorge da Costa Granjal

Team

Carlos João Lopes Mendes, nº2017257272

Filipe Miguel Fonseca dos Santos, nº2017271196

Index

Configurations 3
Network Configurations 3
OpenVPN Configurations 3
OpenVPN Configurations (Coimbra VPN Gateway) 4
OpenVPN Configurations (Road Warrior and Lisboa VPN Gateway) 6
Certificates 8
Creation of Certificate Authority (CA) 8
Certificates issued by the CA 9
Certificates revoked by the CA 10
How to run the project 11
Functionality Testing 11
Connections between entities 11
2-Factor Authentication 12
OCSP testing 12
Annexes 13
References 13

Configurations

Network Configurations

For the network configuration we used the addresses and networks shown in figure 1. The Coimbra VPN Gateway acts as the server for establishing both VPN tunnels. While in the Road Warrior – Coimbra tunnel it functions as a "true server" for the Road Warrior, in the other tunnel it is simply used to start the connection between both Gateways (Gateway-to-Gateway).

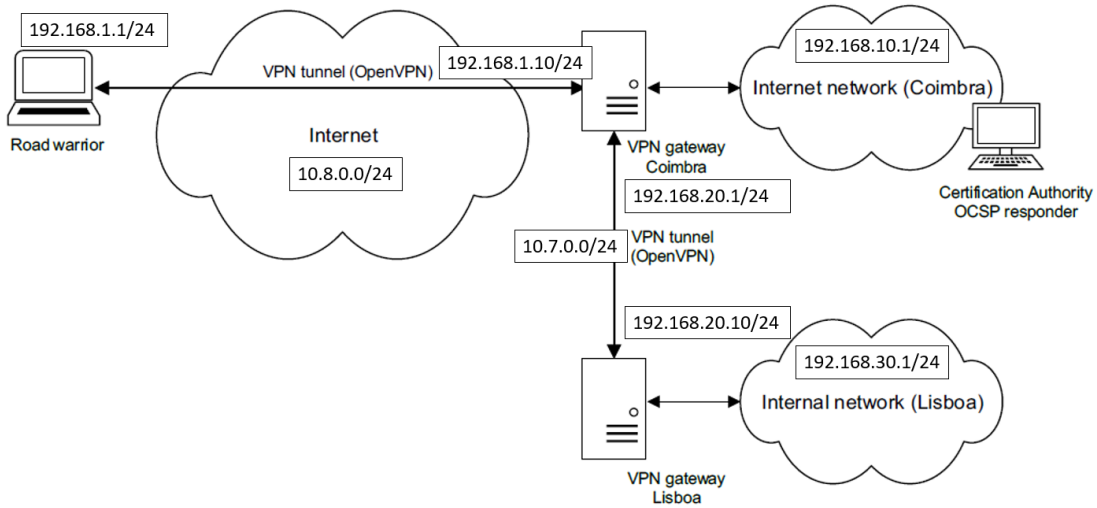

Figure 1 – Network Configuration

For this project we used 3 virtual machines, to represent the 3 different entities shown in the figure above. Each virtual machine received the appropriate number of adapters, one for NAT (to access the internet) and others for internal networks. The internal networks were configured to achieve the scheme presented in figure 1.

OpenVPN Configurations

For these configurations we used the server.conf and client.conf samples provided by the openvpn installation. We made changes to these files so they would match up with the necessary configurations.

OpenVPN Configurations (Coimbra VPN Gateway)

```
VPN Gateway Coimbra
    Coimbra - Road Warrior
        cp /usr/lib64/openvpn/plugins/openvpn-plugin-auth-pam.so /etc/pki/CA

        gedit /etc/openvpn/server/server.conf
            local 192.168.1.10
            port 1194
            certificates
                ca /etc/pki/CA/STI_CA.crt
                cert /etc/pki/CA/GatewayCoimbra.crt
                key /etc/pki/CA/GatewayCoimbra.key
            dh /etc/openvpn/server/dh2048.pem
            server 10.8.0.0 255.255.255.0
            push "route 192.168.10.0 255.255.255.0"
            push "route 10.7.0.0 255.255.255.0"
            push "route 192.168.30.0 255.255.255.0"
            tls-auth /etc/openvpn/server/ta.key 0

            plugin /etc/pki/CA/openvpn-plugin-auth-pam.so /etc/pam.d/openvpn

            script-security 2
            tls-verify /etc/pki/CA/OCSP_check.sh
```

Figure 2 - Changes made to server.conf for the Coimbra – Road Warrior tunnel

```
Coimbra - Lisboa
    gedit /etc/openvpn/server2/server.conf
        local 192.168.20.1
        port 1195
        certificates
            ca /etc/pki/CA/STI_CA.crt
            cert /etc/pki/CA/GatewayCoimbra.crt
            key /etc/pki/CA/GatewayCoimbra.key
        dh /etc/openvpn/server2/dh2048.pem
        server 10.7.0.0 255.255.255.0
        push "route 192.168.10.0 255.255.255.0"
        push "route 10.8.0.0 255.255.255.0"
        Descomentar
            client-config-dir /etc/openvpn/server2/ccd/
        route 192.168.30.0 255.255.255.0
        tls-auth /etc/openvpn/server2/ta.key 0
```

Figure 3 - Changes made to server.conf for the Coimbra – Lisboa tunnel

For the Coimbra VPN Gateway we used 2 different configurations, one for each VPN tunnel. In each configuration file, we started by changing the IPv4 address, the port, the keys and certificates used. Specific files, such as ta.key and dh2048.pem were generated for each tunnel (and the ta.keys were copied to the respective client).

In both server.conf files we also added the necessary push commands for each component of the network to be able to reach each other. For the Coimbra – Road Warrior tunnel we pushed the internal network of Coimbra, the subnet from the other tunnel and the internal network of Lisboa. As for the other tunnel, we pushed the internal network of Coimbra and the subnet corresponding to the first tunnel. On top of that we used "client-config-dir" in order to announce the internal network of Lisboa, since this network is not directly connected to the VPN of Coimbra, which acts as server in establishing the tunnel. This way the Road Warrior can reach all the way to the Internal Network of Lisboa, and vice-versa.

To allow the use of 2-factor authentication (2FA), we resorted to a plugin provided by the OpenVPN installation (openvpn-plugin-auth-pam.so). For this plugin to work with google authenticator we used the plugin together with the file /etc/pam.d/openvpn (which has the following configurations, as described in **[1]**).

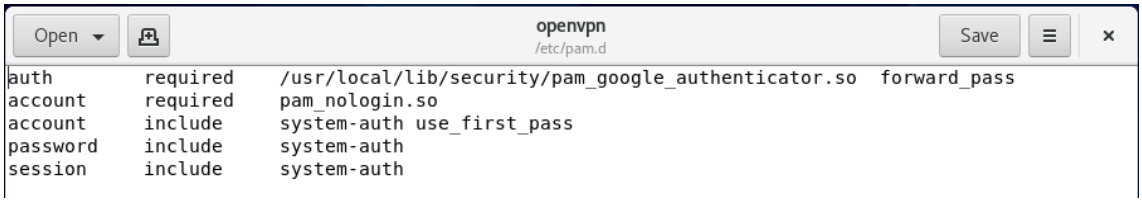

Figure 4 - Changes made to the openvpn file

We also needed to install a couple of packages in order to add google-authenticator to the virtual machine.

```
yum -y install pam-devel
mkdir /usr/src
cd /usr/src
yum install git
git clone https://github.com/google/google-authenticator-libpam
cd google-authenticator-libpam
yum install autoconf
yum install automake
yum install libtool
./bootstrap.sh
./configure
make && make install
```

Figure 5 – Commands to install google-authenticator

The valid usernames for 2FA were created in the VPN Gateway Coimbra machine, as well as their passwords. The “google-authenticator” command was used in order to connect the server to the mobile app. The password a user must enter is the set password for the user concatenated with the one-time token given by the app. For this step we followed this guide: **[2]**.

```
useradd -m RoadWarrior
echo "abc432" | passwd --stdin RoadWarrior
su - RoadWarrior
google-authenticator
```

Figure 6 – Creation of the user for the Coimbra – Road Warrior tunnel

For OCSP to work we utilized the “tls-verify” command together with the OCSP_check.sh file. We also had to give permission to the server to access this file, with the command “script-security 2”. We made a couple of changes to OCSP_check.sh, to give it the correct url and certificates to use. In order to understand the changes we needed to make, we utilized this tutorial **[3]**.

```
Open ▾   OCSP_check.sh   /etc/pki/CA   Save
#ocsp_url="http://ocsp.example.com/"
#ocsp_url="https://ocsp.secure.example.com/"
ocsp_url="http://192.168.10.1:4444"

# Path to issuer certificate (mandatory)
# YOU MUST SET THIS TO THE PATH TO THE CA CERTIFICATE
issuer="/etc/pki/CA/STI_CA.crt"

# use a nonce in the query, set to "-no_nonce" to not use it
nonce="-nonce"

# Verify the response
# YOU MUST SET THIS TO THE PATH TO THE RESPONSE VERIFICATION CERT
verify="/etc/pki/CA/STI_CA.crt"
```

Figure 7 – Changes made to the OCSP_check.sh file

OpenVPN Configurations (Road Warrior and Lisboa VPN Gateway)

```
Road Warrior
    gedit /etc/openvpn/client/client.conf
        remote 192.168.1.10 1194
        certificates
            ca /etc/pki/CA/STI_CA.crt
            cert /etc/pki/CA/RW.crt
            key /etc/pki/CA/RW.key
        -Descomentar
            remote-cert-tls server
        tls-auth /etc/openvpn/client/ta.key 1
        auth-user-pass
```

Figure 9 – Changes made to the client.conf of the Road Warrior

```
VPN Gateway Lisboa
    gedit /etc/openvpn/client/client.conf
        remote 192.168.20.1 1195
        certificates
            ca /etc/pki/CA/STI_CA.crt
            cert /etc/pki/CA/GatewayLisboa.crt
            key /etc/pki/CA/GatewayLisboa.key
        -Descomentar
            remote-cert-tls server
        tls-auth /etc/openvpn/client/ta.key 1
```

Figure 8 - Changes made to the client.conf of Lisboa

In both client.conf files we changed the IPv4 address, port, keys and certificates used. We also uncommented the command “remote-cert-tls server” so that the keyUsage of the

certificates is correctly verified. With this option enabled we made sure to use the right keyUsage in the “/etc/pki/tls/openssl.cnf” file while signing the certificates. More specifically we changed the keyUsage in the client to “digitalSignature” and on the server to “digitalSignature, keyEncipherment”. For the server we also added the extendedKeyUsage “serverAuth”. All of this in accordance with **[4]**.

To force the Road Warrior to present a valid username and password we added the option “auth-user-pass”.

Certificates

Creation of Certificate Authority (CA)

Before issuing the certificates, we started by configuring the "/etc/pki/tls/openssl.cnf" file. We changed the keyUsage according to what we mentioned in the "OpenVPN Configurations (Road Warrior and Lisboa VPN Gateway)" section. We also changed the options "stateOrProvinceName" and "localityName" so that they are "optional", which allows these parameters to be different among the entities.

On top of that, some options were added that are later used when signing the OCSP Responder certificate. Notably, a URL is set to be used and certain keys are set, as explained in **[5]**.

```
[usr_cert]
authorityInfoAccess=OCSP;URI:http://192.168.10.1:4444

[v3_OCSP]
basicConstraints=CA:FALSE
keyUsage=nonRepudiation,digitalSignature,keyEncipherment
extendedKeyUsage=OCSPSigning
```

Figure 10 – Additions to the "/etc/pki/tls/openssl.cnf" file for signing the certificate for the OCSP Responder

For this project we used a self-signed certificate as the CA. It was created in the Coimbra VPN Gateway machine using the following commands.

```
Certification Authority
    1 - openssl genrsa -des3 -out STI_CA.key
        password: abc432
    2 - openssl req -new -key STI_CA.key -out STI_CA.csr
        Country: PT
        State: Coimbra
        Locality: Coimbra
        Org: UC
        Org Unit: DEI
        Common Name: STI_CA
        Email: fmsantos@student.dei.uc.pt
    3 - openssl x509 -req -days 3610 -in STI_CA.csr -out STI_CA.crt -signkey
    STI_CA.key
```

Figure 11 – Commands to create CA

Certificates issued by the CA

For the Coimbra VPN Gateway certificate we simply executed the commands below on the machine itself, since the CA is on the same location.

```
VPN Gateway Coimbra
    1 - openssl genrsa -des3 -out GatewayCoimbra.key
        password: abc432
    2 - openssl req -new -key GatewayCoimbra.key -out GatewayCoimbra.csr
        Country: PT
        State: Coimbra
        Locality: Coimbra
        Org: UC
        Org Unit: DEI
        Common Name: VPN Gateway Coimbra
        Email: fmsantos@student.dei.uc.pt
    3 - openssl ca -in GatewayCoimbra.csr -cert STI_CA.crt -keyfile STI_CA.key -out
    GatewayCoimbra.crt
```

Figure 12 – Commands to create and sign the VPN Gateway Coimbra certificate

As for the Road Warrior and VPN Gateway Lisboa certificates, we started by issuing a request for each certificate in the respective machine (steps 1 and 2). After that, we sent the request (.csr) to the VPN Gateway Coimbra, since the CA and its key were in this machine. Then we executed the third command and sent the resulting certificate to its respective machine.

```
Road Warrior
    1 - openssl genrsa -des3 -out RW.key
        password: abc432
    2 - openssl req -new -key RW.key -out RW.csr
        Country: PT
        State: Coimbra
        Locality: Coimbra
        Org: UC
        Org Unit: DEI
        Common Name: Road Warrior
        Email: fmsantos@student.dei.uc.pt
    3 - openssl ca -in RW.csr -cert STI_CA.crt -keyfile STI_CA.key -out RW.crt
```

Figure 13 - Commands to create and sign the Road Warrior certificate

```
VPN Gateway Lisboa
    1 - openssl genrsa -des3 -out GatewayLisboa.key
        password: abc432
    2 - openssl req -new -key GatewayLisboa.key -out GatewayLisboa.csr
        Country: PT
        State: Lisboa
        Locality: Lisboa
        Org: UC
        Org Unit: DEI
        Common Name: VPN Gateway Lisboa
        Email: fmsantos@student.dei.uc.pt
    3 - openssl ca -in GatewayLisboa.csr -cert STI_CA.crt -keyfile STI_CA.key -out
    GatewayLisboa.crt
```

Figure 14 - Commands to create and sign the VPN Gateway Lisboa certificate

These commands were executed on the VPN Coimbra Gateway machine, since the OCSP Responder is in the Internal Network of Coimbra. The "-extensions" is used to specify the properties shown in figure 10.

```
OCSP Responder
    1 - openssl genrsa -des3 -out OCSP_Responder.key
        password: abc432
    2 - openssl req -new -key OCSP_Responder.key -out OCSP_Responder.csr
        Country: PT
        State: Coimbra
        Locality: Coimbra
        Org: UC
        Org Unit: DEI
        Common Name: OCSP_Responder
        Email: fmsantos@student.dei.uc.pt
    3 - openssl ca -in OCSP_Responder.csr -cert STI_CA.crt -keyfile STI_CA.key -out
    OCSP_Responder.crt -extensions v3_OCSP
```

Figure 15 - Commands to create and sign the OCSP Responder certificate

Certificates revoked by the CA

To revoke certificates, we simply execute the following command in the "etc/pki/CA" folder in the Coimbra VPN Gateway machine, replacing "Dummy" with the correct name for the certificate we want to revoke. We use this directory and machine since they contain all our certificates

```
openssl ca -revoke Dummy.crt -keyfile STI_CA.key -cert STI_CA.crt
```

Figure 16 – Command to revoke certificates

How to run the project

```
Open Vpn Coimbra
    OCSP Responder (Correr na pasta /etc/pki/CA/)
        openssl ocsp -index index.txt -port 4444 -CA STI_CA.crt -rsigner
        OCSP_Responder.crt -rkey OCSP_Responder.key -resp_text
    Coimbra - Road Warrior
        openvpn --config /etc/openvpn/server/server.conf
    Coimbra - Lisboa
        openvpn --config /etc/openvpn/server2/server.conf

Road Warrior
    openvpn --config /etc/openvpn/client/client.conf

Open VPN Lisboa
    openvpn --config /etc/openvpn/client/client.conf
```

Figure 17 – Commands to run the project (run in /etc/pki/CA)

Functionality Testing

Connections between entities

To test connections between different entities we sent pings from one location to another, while the destination machine was showing the received packets, using the wireshark application (we listened on the tun0 and tun1 interfaces, which were created by OpenVPN).

For the Road Warrior we tested connection with the Coimbra VPN Gateway, the internal network of Coimbra, The Lisboa VPN Gateway and the internal network of Lisboa.

```
Road Warrior - Coimbra VPN
    ping 10.8.0.1

Road Warrior - Internal Coimbra
    ping 192.168.10.1

Road Warrior - Lisboa VPN
    ping 10.7.0.6 (Pode não ser .6)

Road Warrior - Internal Lisboa
    ping 192.168.30.1
```

Figure 18 – Commands to test connections from the Road Warrior

As for the Coimbra VPN Gateway, we tested connection with the Road Warrior, the Lisboa VPN Gateway and the internal network of Lisboa. We also did the same pings using the internal network of Coimbra as the source interface.

```
VPN Coimbra - Road Warrior
    ping 10.8.0.6 (Pode não ser .6)

VPN Coimbra - VPN Lisboa
    ping 10.7.0.6 (Pode não ser .6)

VPN Coimbra - Internal Lisboa
    ping 192.168.30.1
```

Figure 19 - Commands to test connections from VPN Gateway Coimbra

```
Internal Coimbra - Road Warrior
    ping -I 192.168.10.1 10.8.0.6 (Pode não ser .6)

Internal Coimbra - VPN Lisboa
    ping -I 192.168.10.1 10.7.0.6 (Pode não ser .6)

Internal Coimbra - Internal Lisboa
    ping -I 192.168.10.1 192.168.30.1
```

Figure 20 - Commands to test connections from the Internal network of Coimbra

Lastly, for the Lisboa VPN Gateway, we tested connection with the Road Warrior, the Coimbra VPN Gateway and the internal network of Coimbra. We also did the same pings using the internal network of Lisboa as the source interface.

```
VPN Lisboa - Road Warrior
    ping 10.8.0.6 (Pode não ser .6)

VPN Lisboa - VPN Coimbra
    ping 10.7.0.1

VPN Lisboa - Internal Coimbra
    ping 192.168.10.1
```

Figure 21 - Commands to test connections from VPN Gateway Lisboa

```
Internal Lisboa - Road Warrior
    ping -I 192.168.30.1 10.8.0.6 (Pode não ser .6)

Internal Lisboa - VPN Coimbra
    ping -I 192.168.30.1 10.7.0.1

Internal Lisboa - Internal Coimbra
    ping -I 192.168.30.1 192.168.10.1
```

Figure 22 - Commands to test connections from the Internal network of Lisboa

2-Factor Authentication

For this part we made several tests to check whether inputting the correct username and password (set password concatenated with a one-time token) was the only way for a connection to be established. Eventually all the tests were a success.

OCSP testing

To test whether OCSP was working properly, we started by revoking a certificate and then attempting to establish a OpenVPN connection and checking whether the OCSP would identify the revoked certificate. We did this multiple times for the Road Warrior certificate. After checking the that the connection was unsuccessful and that the OCSP response mentioned the certificate was revoked, we tried creating new certificates. For this part we followed the methodology described when we talked about certificates. The following tests

with the new valid certificates were successful, with the connection established and a positive OCSP response. We repeated this process several times.

Annexes

In the file Configs.txt we have the commands used in full detail, as well as the modifications made to the sample files.

References

1. https://velenux.wordpress.com/2019/03/12/openvpn-with-google-2-factor-authentication-on-centos-7/
2. https://www.howtoforge.com/securing-openvpn-with-a-one-time-password-otp-on-ubuntu
3. https://kura2gurun.blogspot.com/2011/08/openvpn-howto-make-ocsp-server-using.html
4. https://openvpn.net/community-resources/how-to/#mitm
5. https://bhashineen.medium.com/create-your-own-ocsp-server-ffb212df8e63