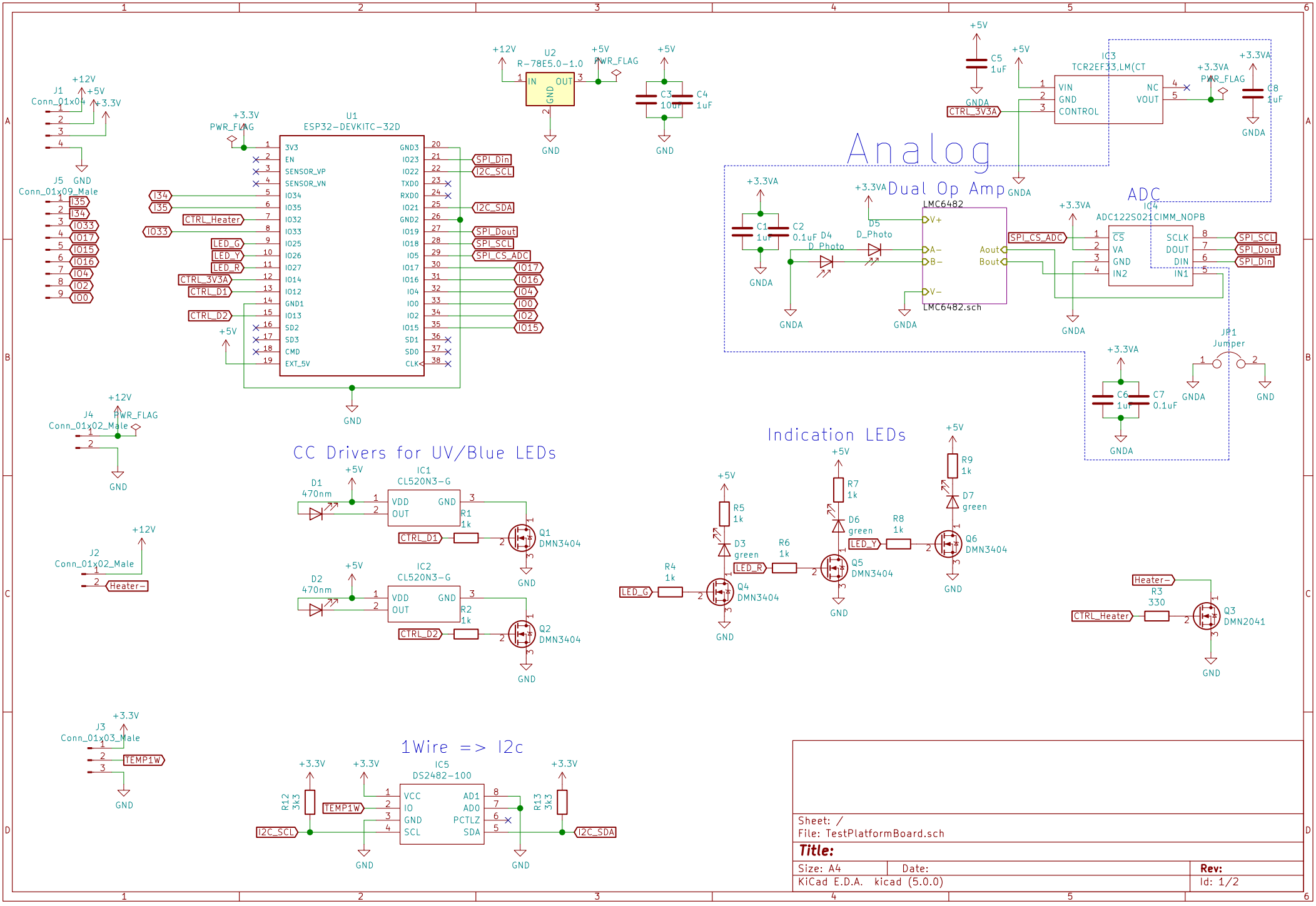
Analog
Dual Op Amp
ADC
CC Drivers for UV/Blue LEDs
Indication LEDs
1Wire => I2c
U1 ESP32-DEVKITC-32D
U2 R-78E5.0-1.0
IC3 TCR2EF33,LM(CT
IC4 ADC122S021CIMM_NOPB
LMC6482
LMC6482.sch
IC1 CL520N3-G
IC2 CL520N3-G
IC5 DS2482-100
J1 Conn_01x04
J5 Conn_01x09_Male
J4 Conn_01x02_Male
J2 Conn_01x02_Male
J3 Conn_01x03_Male
JP1 Jumper
Q1 DMN3404
Q2 DMN3404
Q3 DMN2041
Q4 DMN3404
Q5 DMN3404
Q6 DMN3404
D1 470nm
D2 470nm
D3 green
D4 D_Photo
D5 D_Photo
D6 green
D7 green
SPI_Din
SPI_SCL
SPI_Dout
SPI_CS_ADC
I2C_SCL
I2C_SDA
CTRL_Heater
CTRL_3V3A
CTRL_D1
CTRL_D2
LED_G
LED_Y
LED_R
TEMP1W
Heater-
PWR_FLAG
GND
GNDA
Sheet: /
File: TestPlatformBoard.sch
Title:
Size: A4
Date:
Rev:
KiCad E.D.A. kicad (5.0.0)
Id: 1/2

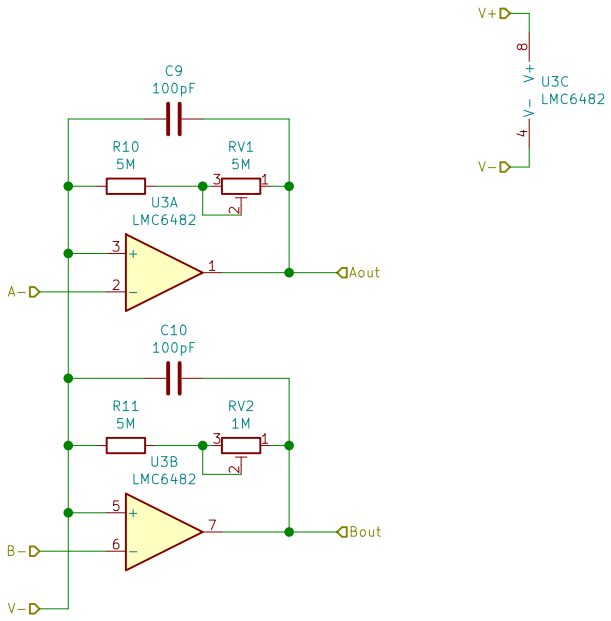

Sheet: /LMC6482/
File: LMC6482.sch

Title:

Size: A4	Date:	**Rev:**
KiCad E.D.A. kicad (5.0.0)		Id: 2/2