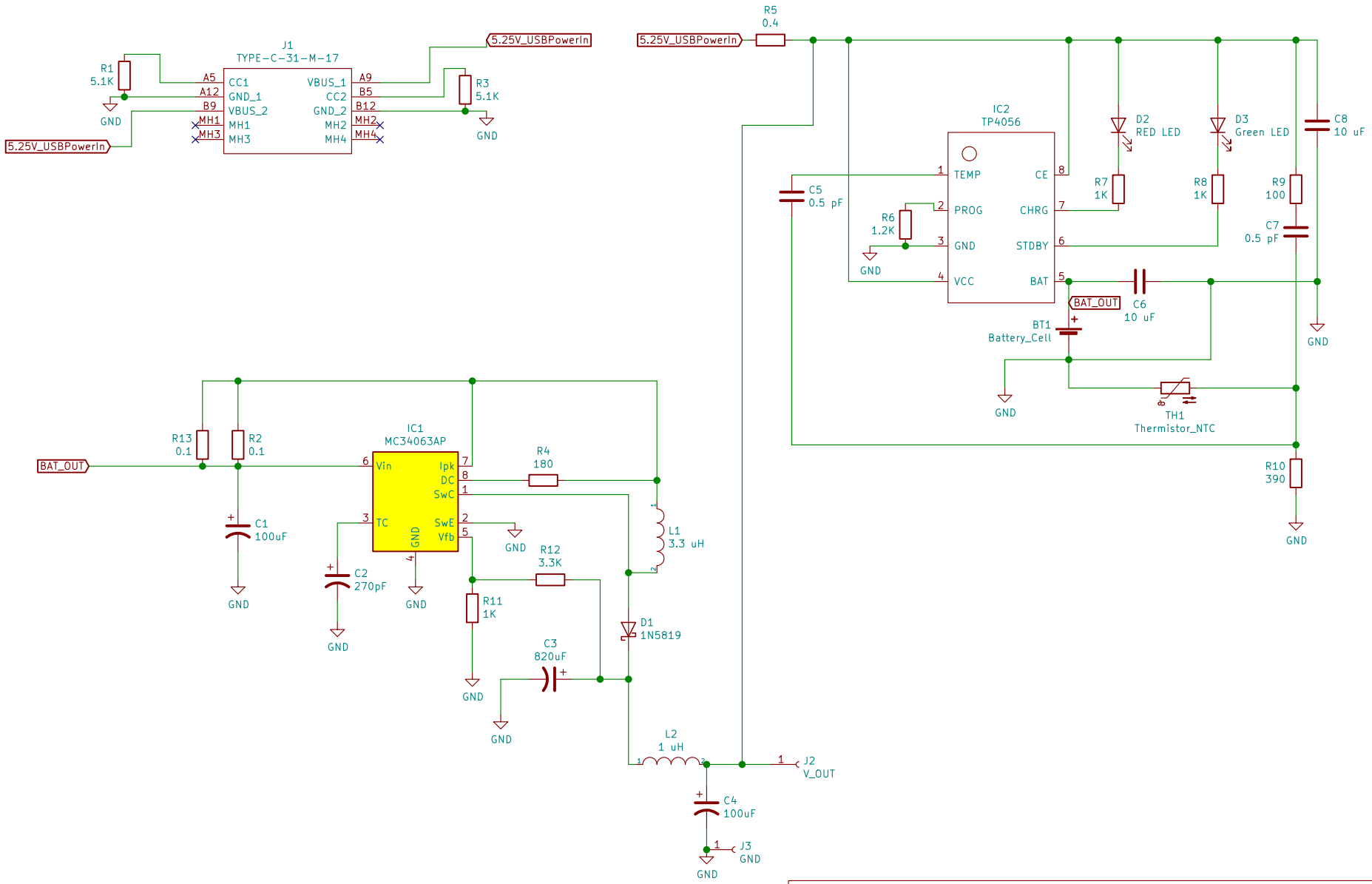

Alexander Wang Inc

Sheet: /

File: PiPowerSystem.sch

Title: Raspberry Pi NAS Power Supply System

Size: USLetter	Date:	Rev:
KiCad E.D.A. kicad (5.1.2)-2		Id: 1/1