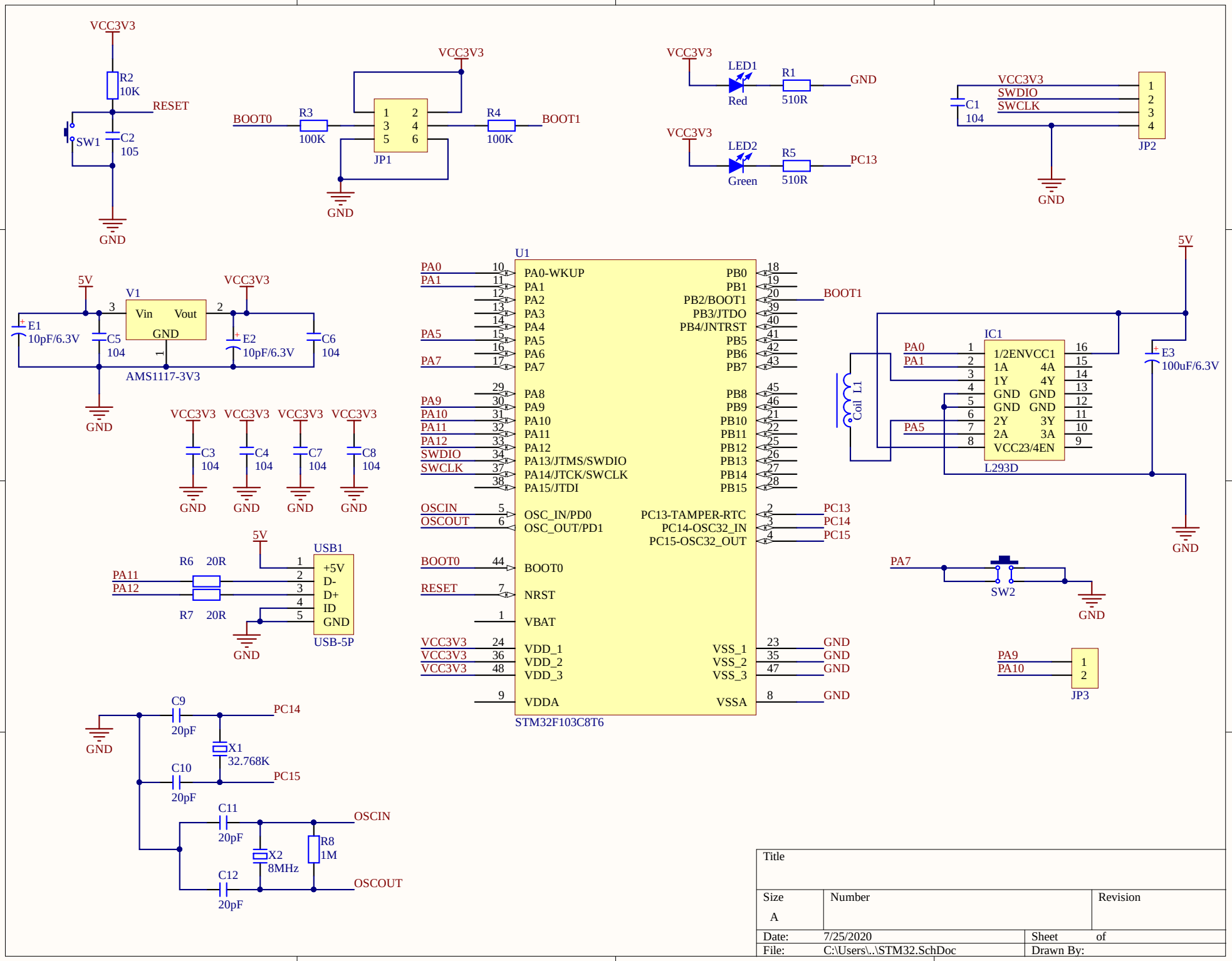

Title		
Size A	Number	Revision
Date: 7/25/2020	Sheet of	
File: C:\Users\..\STM32.SchDoc	Drawn By:	