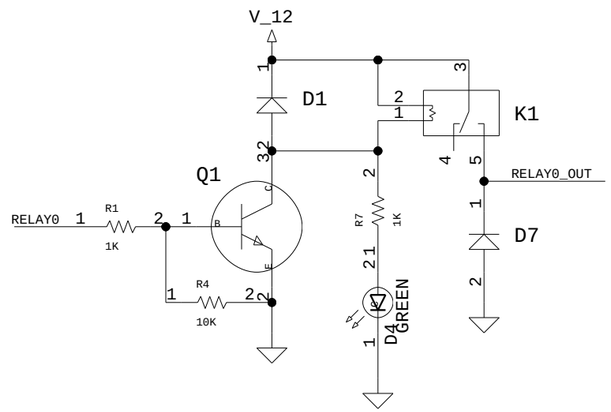

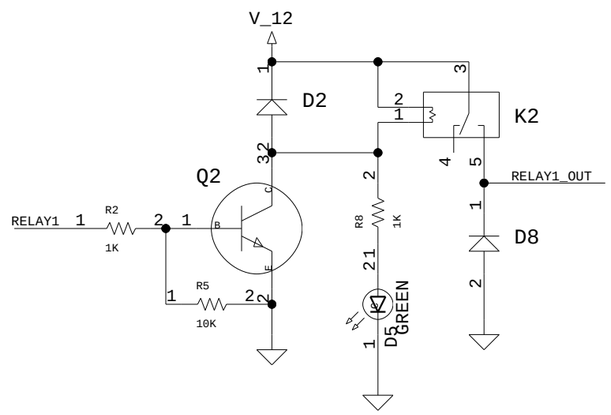

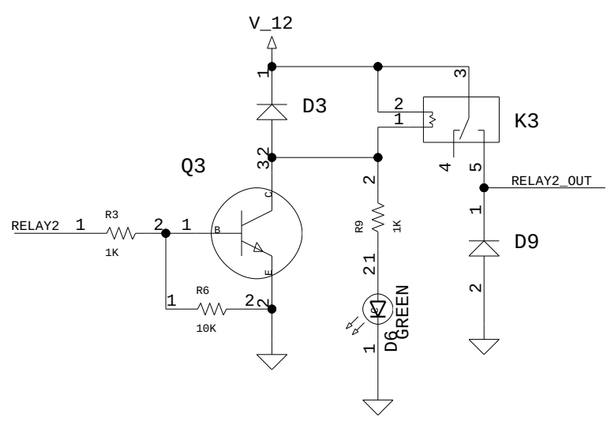

ATMEGA DECOUPLING

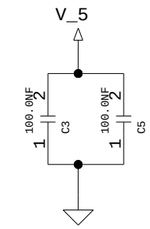

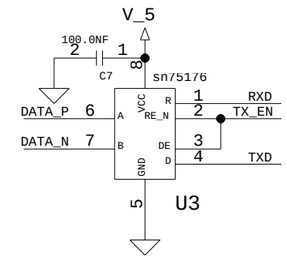

ISP HEADER

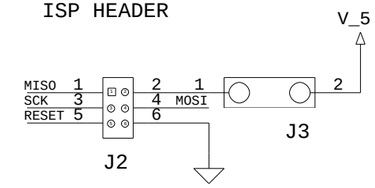

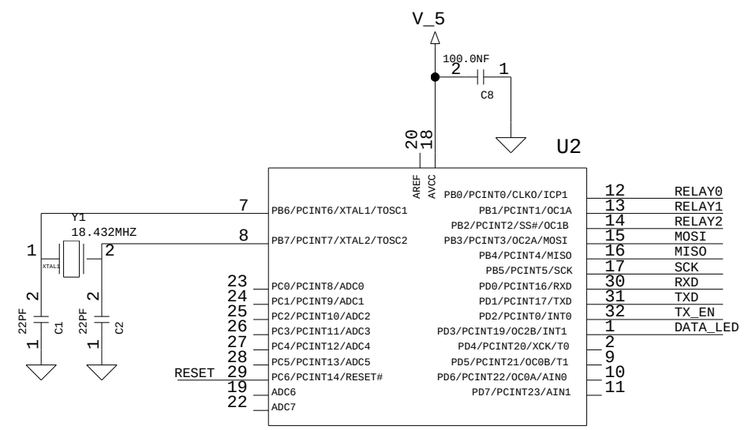

ENABLE INTERNAL PULLUP ON RXD

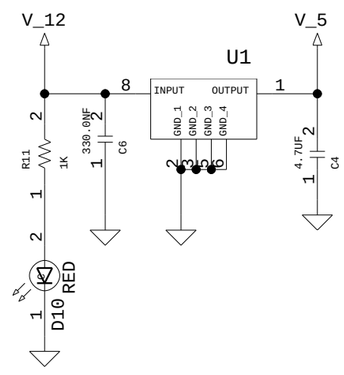

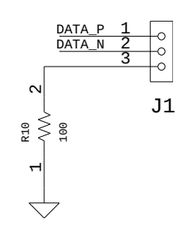

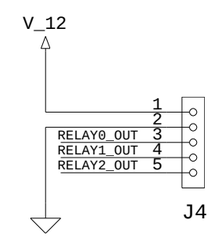

TITLE: 3 RELAY BOARD	DATE: 2009-06-23
ENGINEER: ERIK GILLING	PAGE: 1 OF 1