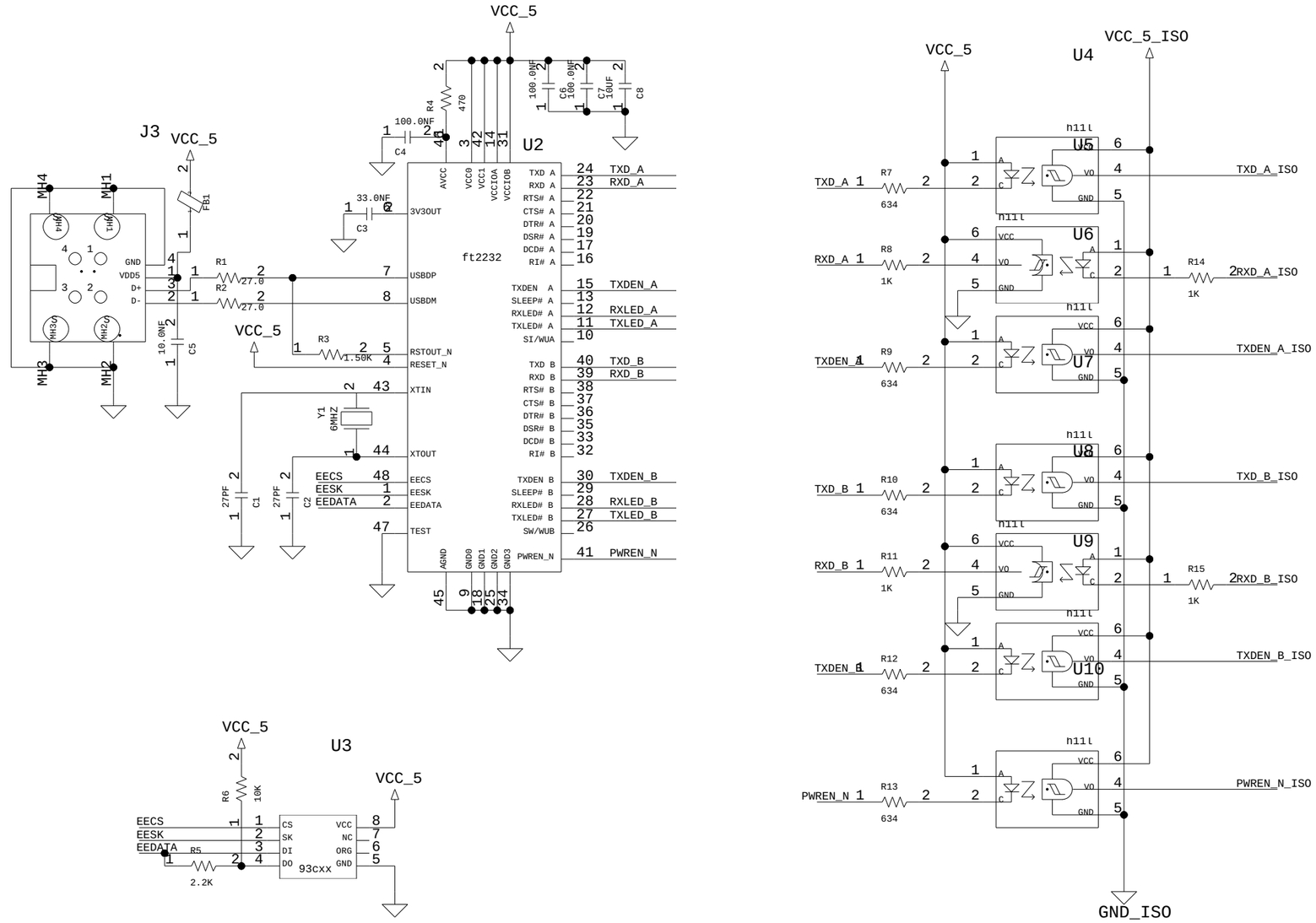

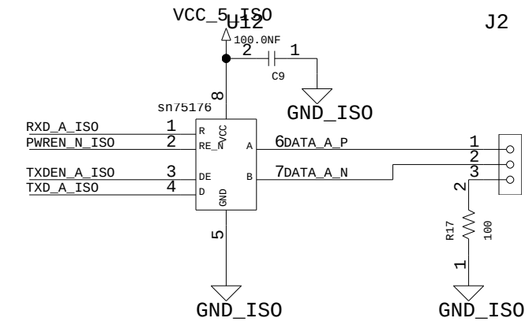

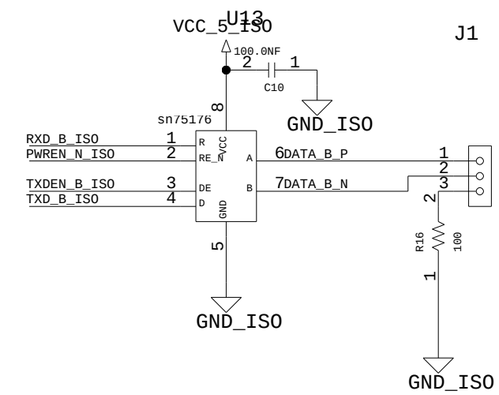

TITLE:	DATE:
ENGINEER:	PAGE: