Class 09 - Hashing

CSIS 3475 Data Structures and Algorithms

©Michael Hrybyk and others
NOT TO BE REDISTRIBUTED

Hashing

- A technique that determines an index into a table using only an entry's search key
- Hash function
  - Takes a search key and produces the integer index of an element in the hash table
  - Search key is mapped, or hashed, to the index

©Michael Hrybyk and Pearson Education NOT TO BE REDISTRIBUTED

Hash Table

- FIGURE 22 :s hash table

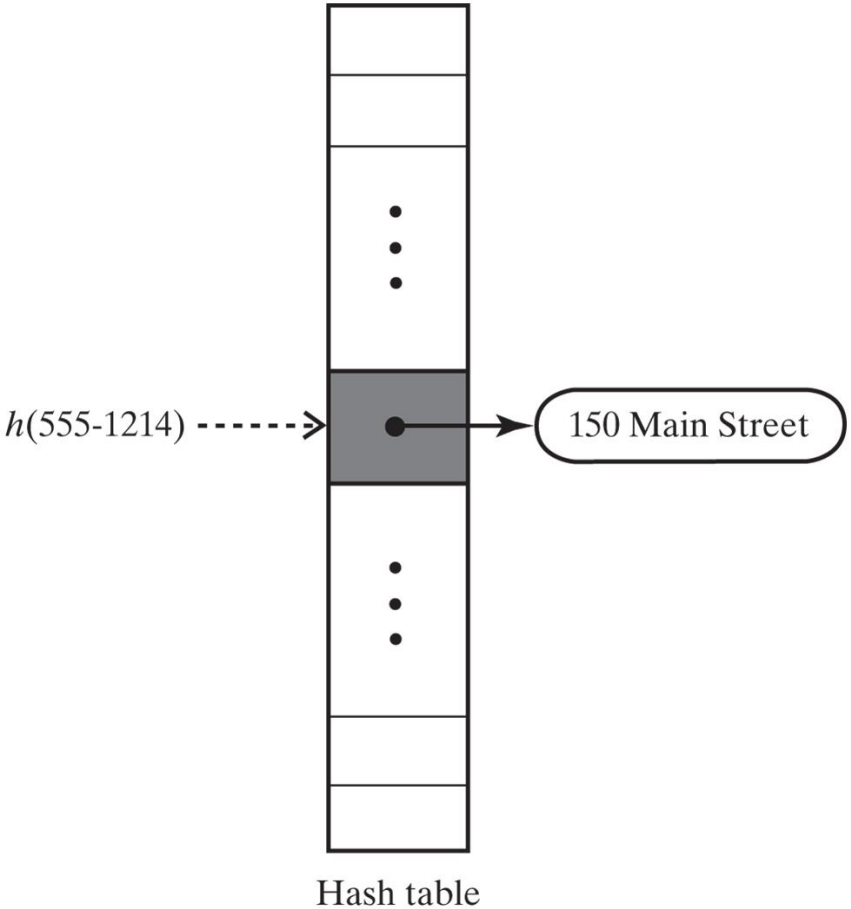

© 2019 Pearson Education, Inc.

Ideal Hashing

- Simple algorithms for the dictionary operations that add and retrieve

Algorithm **add(key, value)**

index = h(key)

hashTable[index] = value

Algorithm **getValue(key)**

index = h(key)

return hashTable[index]

©Michael Hrybyk and Pearson Education NOT TO BE REDISTRIBUTED

Typical Hashing

- Typical hash functions perform two steps:
  - Convert search key to an integer
    - Called the hash code.
  - Compress hash code into the range of indices for hash table.

```
Algorithm getHashIndex(phoneNumber)
// Returns an index to an array of tableSize elements.
i = last four digits of phoneNumber
return i % tableSize
```

Typical Hashing

- Most hash functions are not perfect,
  - Can allow more than one search key to map into a single index
  - Causes a collision in the hash table
- Consider **`tableSize = 101`**
- **`getHashIndex(555-1214) = 52`**
- **`getHashIndex(555-8132) = 52`** ***also!!!***

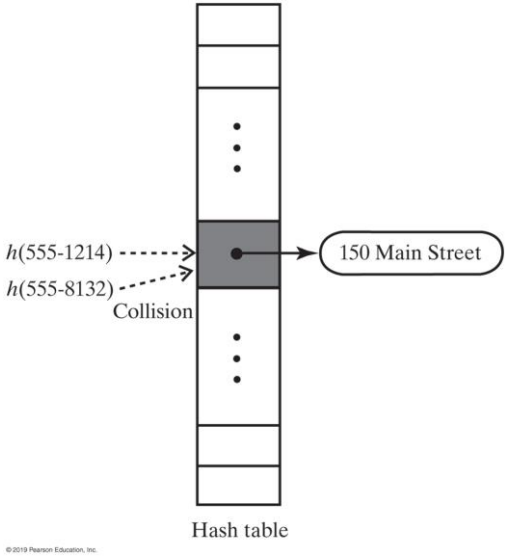

FIGURE 22-2 A collision caused by the hash function *h*

Hash Functions

- A good hash function should
  - Minimize collisions
  - Be fast to compute
- To reduce the chance of a collision
  - Choose a hash function that distributes entries uniformly throughout hash table.

©Michael Hrybyk and Pearson Education NOT TO BE REDISTRIBUTED

Computing Hash Codes

- Java's base class **`Object`** has a method **`hashCode`** that returns an integer hash code
  - A class should/could define its own version of **`hashCode`**
- A hash code for a string
  - Using a character's Unicode integer is common
  - Better approach:
    - Multiply Unicode value of each character by factor based on character's position,
    - Then sum values

©Michael Hrybyk and Pearson Education NOT TO BE REDISTRIBUTED

Computing Hash Codes

- Hash code for a string example:

$$u_0 g^{n-1} + u_1 g^{n-2} + \ldots + u^{n-2} g + u_{n-1}$$

- Java code to do this:

```
int hash = 0;
int n = s.length();
for (int i = 0; i < n; i++)
  hash = g * hash + s.charAt(i);
```

©Michael Hrybyk and Pearson Education NOT TO BE REDISTRIBUTED

Hash Code for a Primitive type

- If data type is **`int`**,
  - Use the key itself
- For **`byte, short, char`**:
  - Cast as **`int`**
- Other primitive types
  - Manipulate internal binary representations

©Michael Hrybyk and Pearson Education NOT TO BE REDISTRIBUTED

Compressing a Hash Code

- Common way to scale an integer
  - Use Java mod operator **%**: **`code % n`**
- Best to use an odd number for n
- Prime numbers often give good distribution of hash values

©Michael Hrybyk and Pearson Education NOT TO BE REDISTRIBUTED

Compressing a Hash Code

- Hash function for the ADT dictionary

```
private int getHashIndex(K key)
{
  int hashIndex = key.hashCode() % hashTable.length;
  if (hashIndex < 0)
    hashIndex = hashIndex + hashTable.length;

  return hashIndex;
} // end getHashIndex
```

©Michael Hrybyk and Pearson Education NOT TO BE REDISTRIBUTED

Resolving Collisions

- Collision:
  - Hash function maps search key into a location in hash table already in use
- Two choices:
  - Use another location in the hash table
  - Change the structure of the hash table so that each array location can represent more than one value

©Michael Hrybyk and Pearson Education NOT TO BE REDISTRIBUTED

Resolving Collisions

- **Linear probing**
  - Resolves a collision during hashing by examining consecutive locations in hash table
  - Beginning at original hash index
  - Find the next available one
- Table locations checked make up probe sequence
- If probe sequence reaches end of table, go to beginning of table (circular hash table)

©Michael Hrybyk and Pearson Education NOT TO BE REDISTRIBUTED

Linear Probing

- FIGURE 22-3 T ng four entries whose search

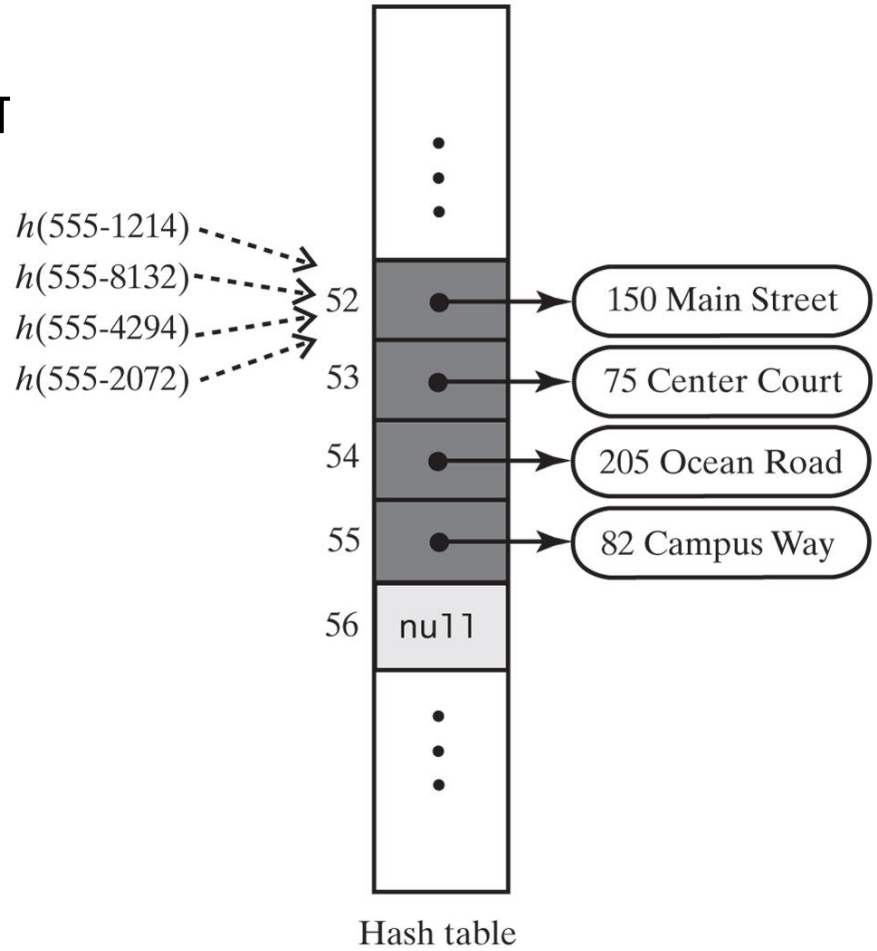

© 2019 Pearson Education, Inc.

Linear Probing

- FIGURE 22 move entries

© 2019 Pearson Education, Inc.

Resolving Collisions

- Need to distinguish among three kinds of locations in the hash table
  - **`Occupied`**
    - location references an entry in the dictionary
  - **`Empty`**
    - location contains null and always has
  - **`Available`**
    - location's entry was removed from the dictionary

©Michael Hrybyk and Pearson Education NOT TO BE REDISTRIBUTED

Linear Probing

- FIGURE 22-6 The linear probe sequence in various situations

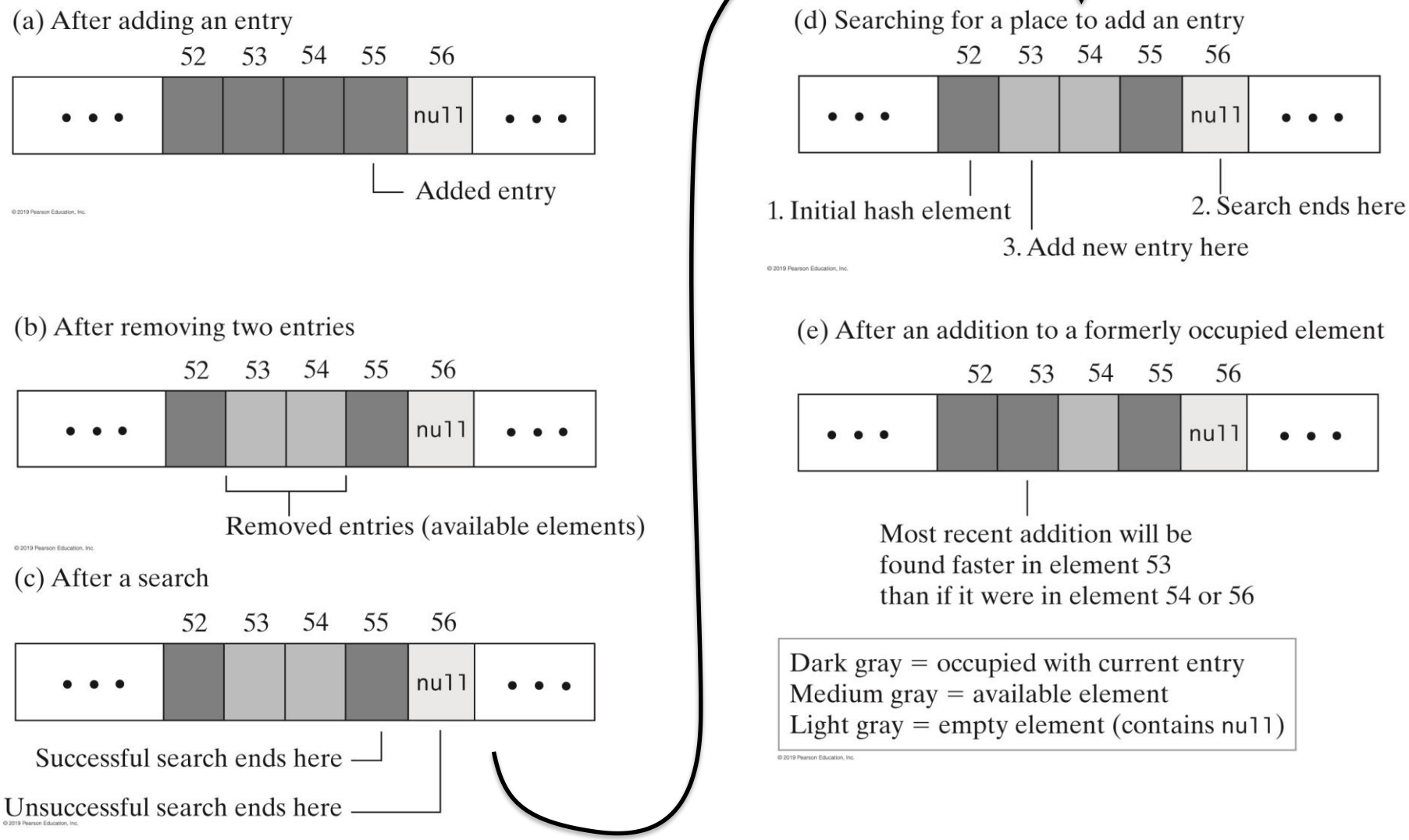

Linear Probing - Probe Algorithm

```
Algorithm probe(index, key)
// Searches the probe sequence that begins at index. Returns the index of either the element
// containing key or an available element in the hash table.
while (key is not found and hashTable[index] is not null)
{
        if (hashTable[index] references an entry in the dictionary)
        {
                if (the entry in hashTable[index] contains key)
                        Exit loop
                else
                        index = next probe index
        }
        else // hashTable[index] is available
        {
                if (this is the first available element encountered)
                        availableStateIndex = index
                index = next probe index
        }
}
if (key is found or an available element was not encountered)
        return index
else
        return availableStateIndex // Index of first entry removed
```

Linear Probe Algorithm

```
// Precondition: checkIntegrity has been called.
private int linearProbe(int index, K key)
{
        boolean found = false;
        int availableStateIndex = −1; // Index of first element in available state
        while ( !found && (hashTable[index] != null) )
        {
                if (hashTable[index] != AVAILABLE)
                {
                        if  (key.equals(hashTable[index].getKey()))
                                found = true; // Key found
                        else      // Follow probe  sequence
                                index = (index + 1) % hashTable.length; // Linear probing
                }
                else // Element in available state; skip it, but mark the first one encountered
                {
                        // Save index of first element in available state
                        if (availableStateIndex == −1)
                    availableStateIndex = index;
                        index  =  (index  +  1) % hashTable.length;      // Linear probing
                } // end if
        } // end while
        // Assertion: Either key or null is found at hashTable[index]
        if (found || (availableStateIndex == −1) )
                        return index;                    // Index  of  either  key  or  null
        else
                        return availableStateIndex; // Index of an available element
} // end  linearProbe
```

Revised version of linear probe

```
private int linearProbe(int index, K key) {
      boolean found = false;

      // Index of first available location (from which an entry was removed)
      int availableIndex = -1;

      // start looking at keys at the index location, then increment until key is found

      while (!found && (hashTable[index] != null)) {

            // if there is an entry in the location test for equality

            if (hasAnEntry(index)) {
                  if(key.equals(hashTable[index].getKey()))
                              found = true; // Key found
            } else
            {
                  // Skip entries that were removed
                  // but save index of first location in removed state
                  if (availableIndex == -1)
                        availableIndex = index;

            }

            // if there was an entry but it wasn't the key, increment th
            // index and try again

            if(!found)
                  index = setHashIndex(index + 1); // Linear probing

      }

      // if the key is found return the location
      // if we didn't find the key and there are only null entries, return the first
      // null entry

      // otherwise, return the first available index

      if (found || (availableIndex == -1))
            return index; // Index of either key or null
      else
            return availableIndex; // Index of an available location
} // end linearProbe
```

©Michael Hrybyk and Pearson Education NOT TO BE REDISTRIBUTED

Clustering

- Collisions resolved with linear probing cause groups of consecutive locations in hash table to be occupied
  - Each group is called a ***cluster***
- Bigger clusters mean longer search times following collision

©Michael Hrybyk and Pearson Education NOT TO BE REDISTRIBUTED

Open Addressing with Quadratic Probing

- Linear probing looks at consecutive locations beginning at index ***k***
- Quadratic probing:
  - Considers the locations at indices $k + j^2$
  - Uses the indices $k,\ k + 1,\ k + 4,\ k + 9,\ \ldots$

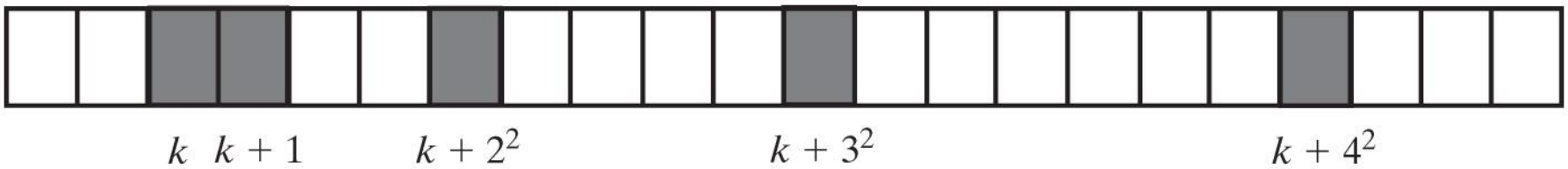

© 2019 Pearson Education, Inc.

FIGURE 22-7 A probe sequence of length five using quadratic probing

Open Addressing with Double Hashing

- Linear probing and quadratic probing add increments to k to define a probe sequence
  - Both are independent of the search key
- Double hashing uses a second hash function to compute these increments
  - This is a key-dependent method.

©Michael Hrybyk and Pearson Education NOT TO BE REDISTRIBUTED

Open Addressing with Double Hashing

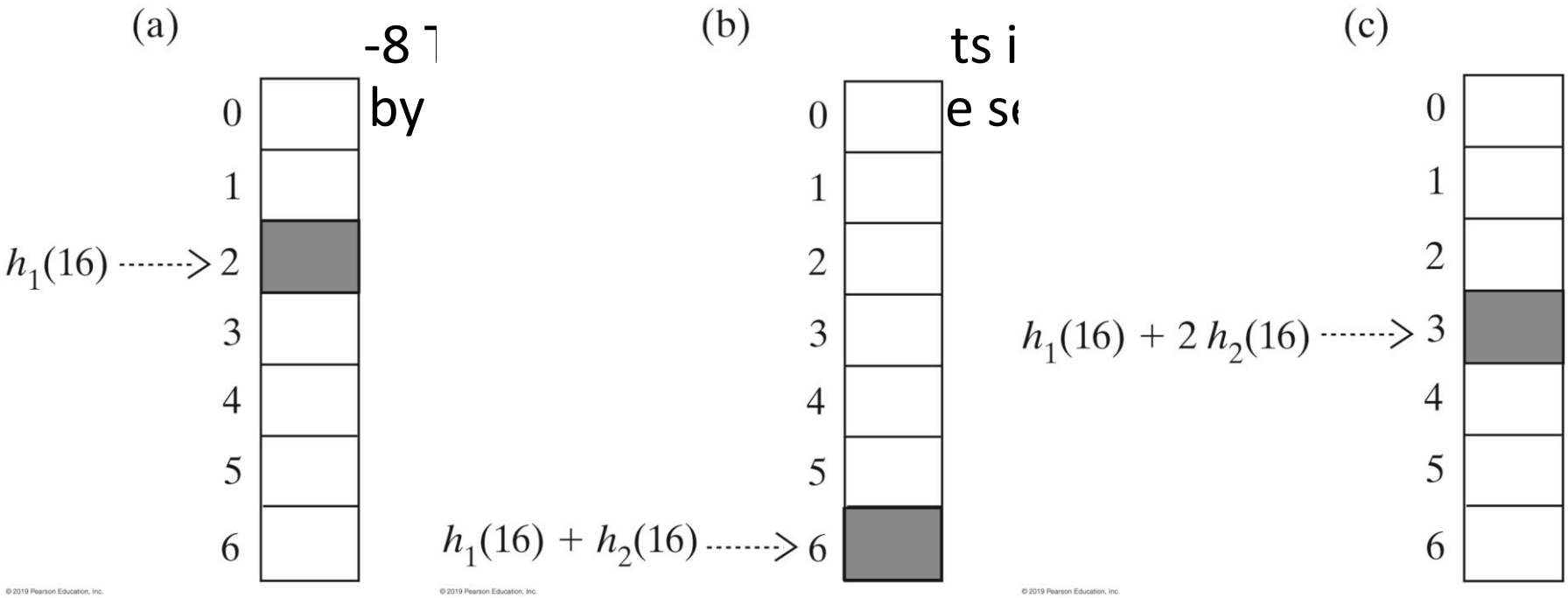

Potential Problem with Open Addressing

- Recall each location is either occupied, empty, or available
  - Frequent additions and removals can result in no locations that are null
- Thus searching a probe sequence will not work
- Consider separate chaining as a solution

©Michael Hrybyk and Pearson Education NOT TO BE REDISTRIBUTED

Separate Chaining

- Alter the structure of the hash table
  - Each location can represent more than one value.
  - Such a location is called a bucket
- Decide how to represent a bucket
  - **`list, sorted list`**
  - **`array`**
  - **`linked nodes`**
  - **`vector`**

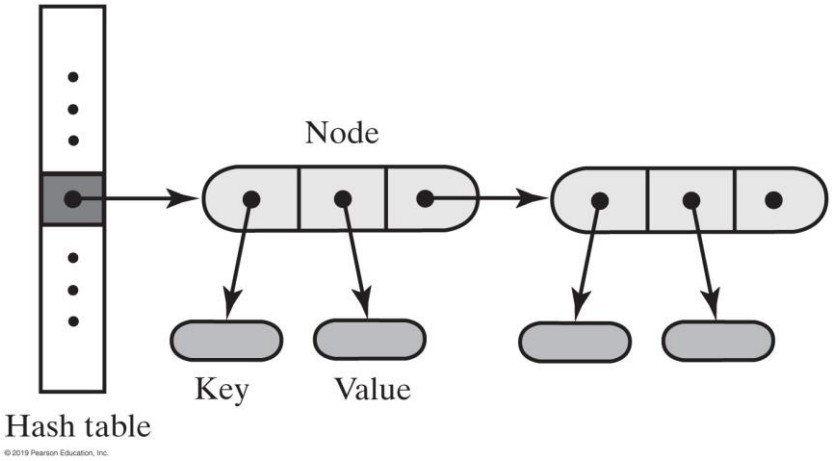

FIGURE 22-9 A hash table for use with separate chaining; each bucket is a chain of linked nodes

Separate Chaining

- FIGURE 22-10a Inserting a new entry into a linked bucket according to the nature of the integer search keys

(a) Unsorted, and possibly duplicate, keys

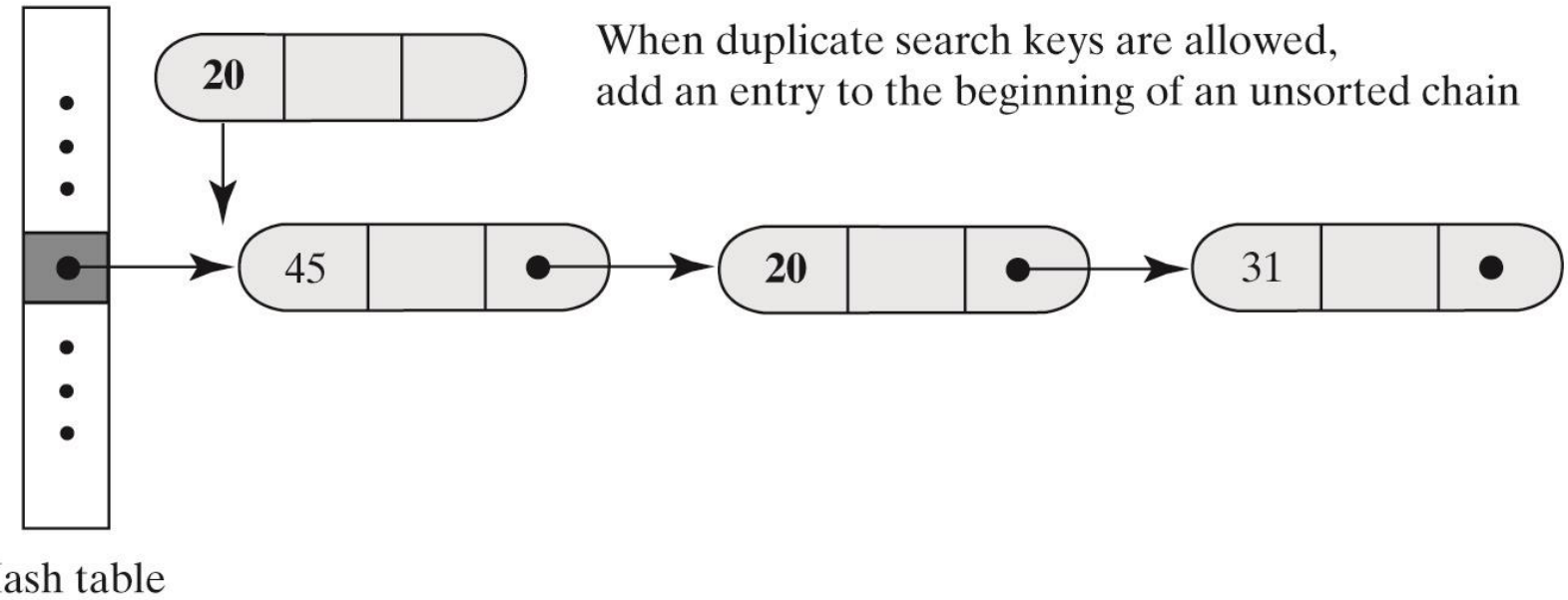

© 2019 Pearson Education, Inc.

Separate Chaining

- FIGURE 22-10b Inserting a new entry into a linked bucket according to the nature of the integer search keys

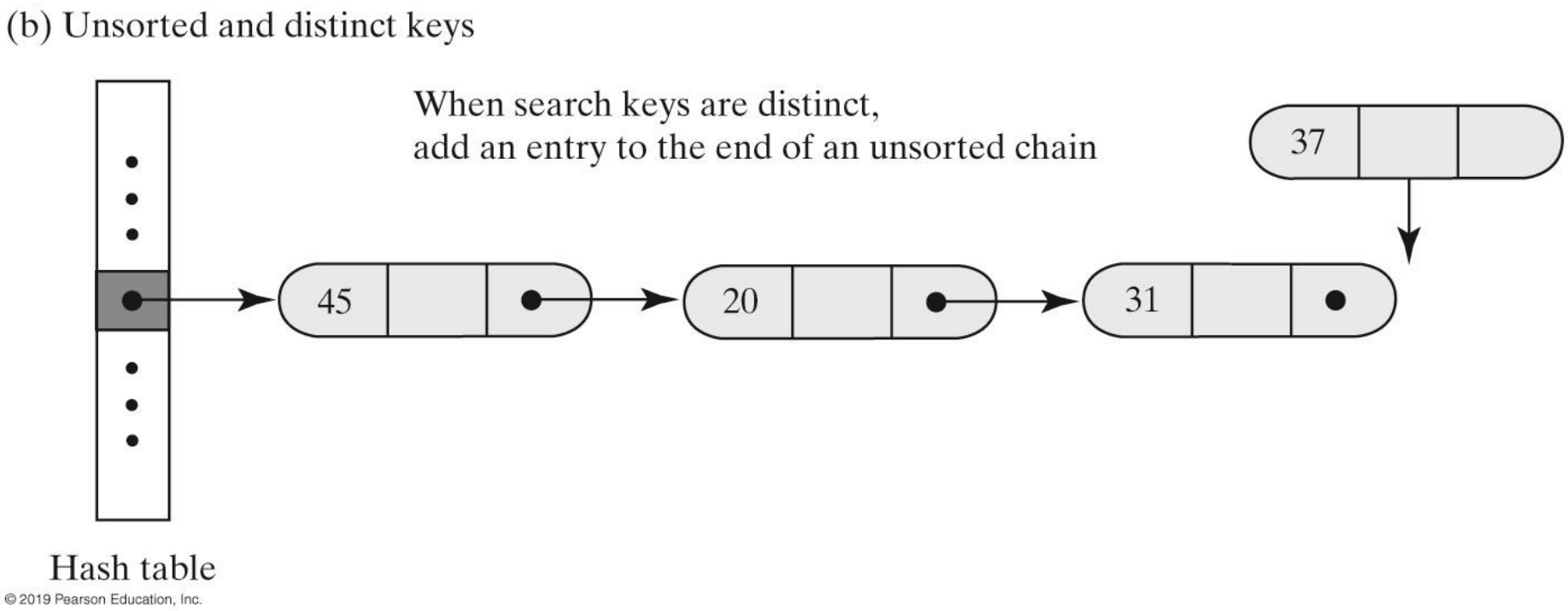

Separate Chaining

- FIGURE 22-10c Inserting a new entry into a linked bucket according to the nature of the integer search keys

(c) Sorted and distinct keys

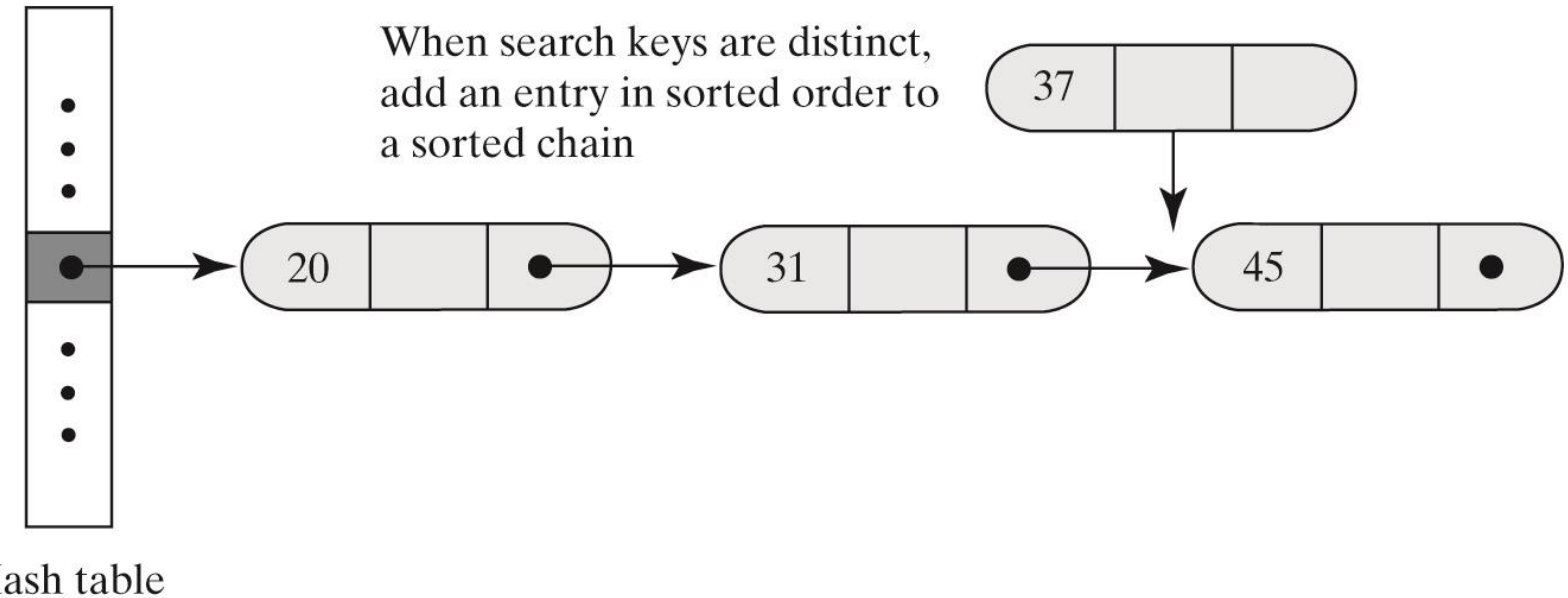

© 2019 Pearson Education, Inc.

Separate Chaining

Algorithm for the dictionary's `add` method.

```
Algorithm add(key, value)
index = getHashIndex(key)
if (hashTable[index] == null)
{
        hashTable[index] = new Node(key, value)
        numberOfEntries++
        return null
}
else
{
    Search the chain that begins at hashTable[index] for a node that contains key
    if (key is found)
    { // Assume currentNode references the node that contains
            key oldValue = currentNode.getValue()
            currentNode.setValue(value)
            return oldValue
    }
    else // Add new node to end of chain
    {//Assume nodeBefore references the last node
            newNode = new Node(key, value)
            nodeBefore.setNextNode(newNode) numberOfEntries++
            return null
    }
}
```

Separate Chaining

- Algorithm for the dictionary's `remove` method.

Algorithm **remove(key)**

index = getHashIndex(key)

Search the chain that begins at hashTable[index] *for a node that contains* key

if (key *is found*)

{

Remove the node that contains key *from the chain*

numberOfEntries––

return *value in removed node*

}

else

return null

Separate Chaining

- Algorithm for the dictionary's `getValue` method.

Algorithm **getValue(key)**

index = getHashIndex(key)

Search the chain that begins at hashTable[index] *for a node that contains* key

if (key *is found*)

    return *value in found node*

else

    return null

©Michael Hrybyk and Pearson Education NOT TO BE REDISTRIBUTED

Efficiency of Hashing

- Observations about the time efficiency of these operations
  - Successful retrieval/removal has same efficiency as successful search
  - Unsuccessful retrieval/removal has same efficiency as unsuccessful search
  - Successful addition has same efficiency as unsuccessful search
  - Unsuccessful addition has same efficiency as successful search

©Michael Hrybyk and Pearson Education NOT TO BE REDISTRIBUTED

Load Factor

- Definition of load factor:

$$\lambda = \frac{\textit{Number of entries in the dictionary}}{\textit{Number of locations in the hash table}}$$

  - Never negative
  - For open addressing, $1 \geq \lambda$
  - For separate chaining, λ has no maximum value
  - Restricting size of λ improves performance

Cost of Open Addressing

- Average number of searches for linear probing

For unsuccessful search: $$\frac{1}{2}\left\{1 + \frac{1}{(1-\lambda)^2}\right\}$$

For successful search: $$\frac{1}{2}\left\{1 + \frac{1}{(1-\lambda)}\right\}$$

©Michael Hrybyk and Pearson Education NOT TO BE REDISTRIBUTED

Cost of Open Addressing

- FIGURE 23-1 The average number of comparisons required by a search of the hash table for given values of the load factor λ when using linear probing

λ	Unsuccessful Search	Successful Search
0.1	1.1	1.1
0.3	1.5	1.2
0.5	2.5	1.5
0.7	6.1	2.2
0.9	50.5	5.5

©Michael Hrybyk and Pearson Education NOT TO BE REDISTRIBUTED

Quadratic Probing and Double Hashing

- Average number of comparisons needed

For unsuccessful search: $$\frac{1}{(1-\lambda)}$$

For successful search: $$\frac{1}{\lambda}\log\left(\frac{1}{1-\lambda}\right)$$

©Michael Hrybyk and Pearson Education NOT TO BE REDISTRIBUTED

Quadratic Probing and Double Hashing

- FIGURE 23-2 The average number of comparisons required by a search of the hash table for given values of the load factor λ when using either quadratic probing or double hashing

λ	Unsuccessful Search	Successful Search
0.1	1.1	1.1
0.3	1.5	1.2
0.5	2.0	1.4
0.7	3.3	1.7
0.9	10.0	2.6

©Michael Hrybyk and Pearson Education NOT TO BE REDISTRIBUTED

Cost of Separate Chaining

- Average number of comparisons during a search when separate chaining is used

For unsuccessful search: λ

For successful search: $1 + \lambda/2$

To maintain reasonable efficiency, you should keep $\lambda < 1$.

©Michael Hrybyk and Pearson Education NOT TO BE REDISTRIBUTED

Cost of Separate Chaining

- FIGURE 23-3 The average number of comparisons required by a search of the hash table for given values of the load factor λ when using separate chaining

λ	Unsuccessful Search	Successful Search
0.1	0.1	1.1
0.3	0.3	1.2
0.5	0.5	1.3
0.7	0.7	1.4
0.9	0.9	1.5
1.1	1.1	1.6
1.3	1.3	1.7
1.5	1.5	1.8
1.7	1.7	1.9
1.9	1.9	2.0
2.0	2.0	2.0

©Michael Hrybyk and Pearson Education NOT TO BE REDISTRIBUTED

Maintaining the Performance of Hashing

- To maintain efficiency, restrict the size of λ as follows:
  - $\lambda < 0.5$ for open addressing
  - $\lambda < 1.0$ for separate chaining
- Should the load factor exceed these bounds
  - Increase the size of the hash table

©Michael Hrybyk and Pearson Education NOT TO BE REDISTRIBUTED

Rehashing

- When the load factor λ becomes too large must resize the hash table
- Compute the table's new size
  - Double its present size
  - Increase the result to the next prime number
  - Use method add to add the current entries in dictionary to new hash table

©Michael Hrybyk and Pearson Education NOT TO BE REDISTRIBUTED

Comparing Schemes for Collision Resolution

- FIGURE 23-4 The average number of comparisons required by a search of the hash table versus the load factor λ for four collision resolution techniques

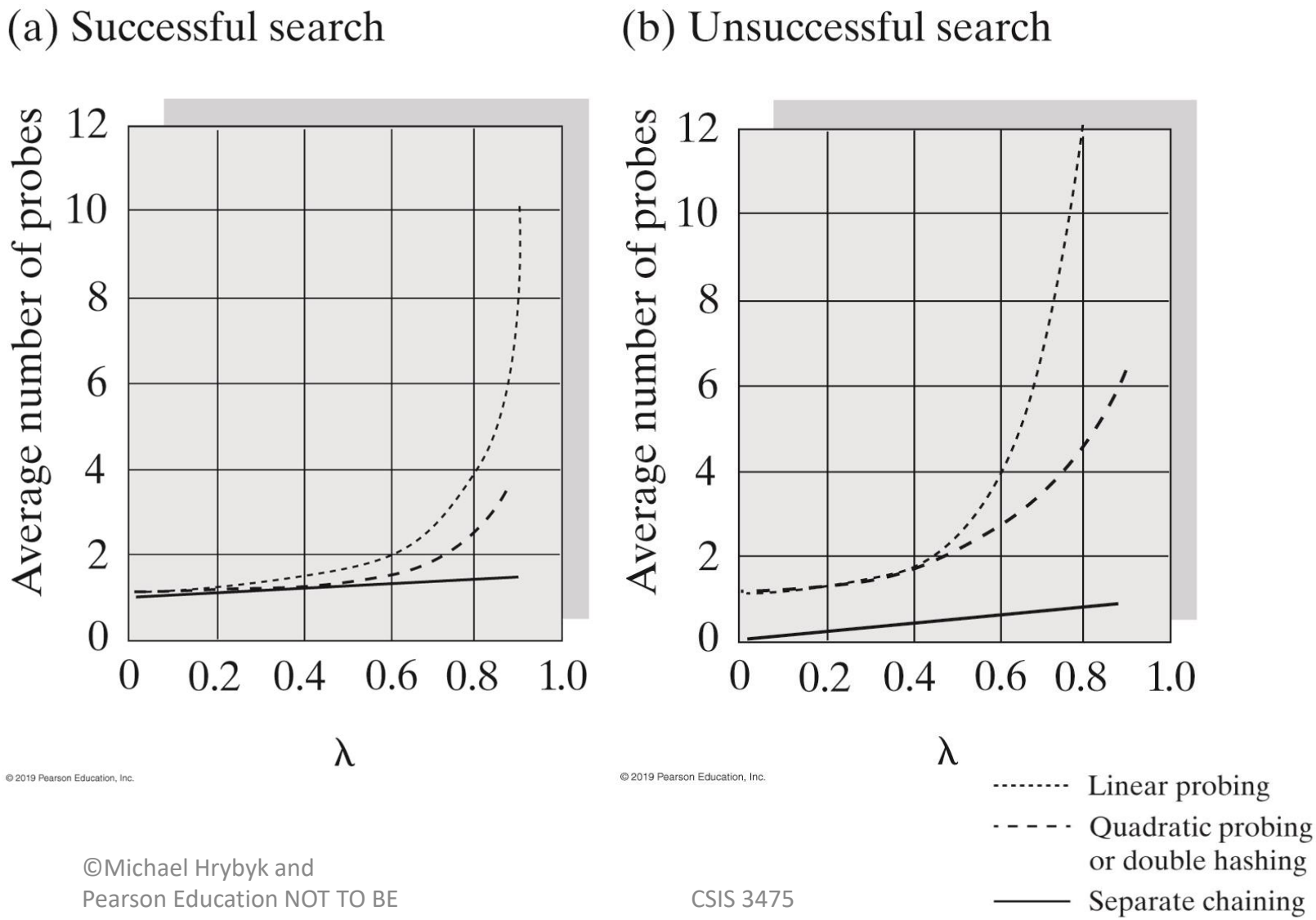

© 2019 Pearson Education, Inc.

© 2019 Pearson Education, Inc.

Dictionary Implementation That Uses Hashing

- FIGURE 23-5 A hash table and one of its entry objects

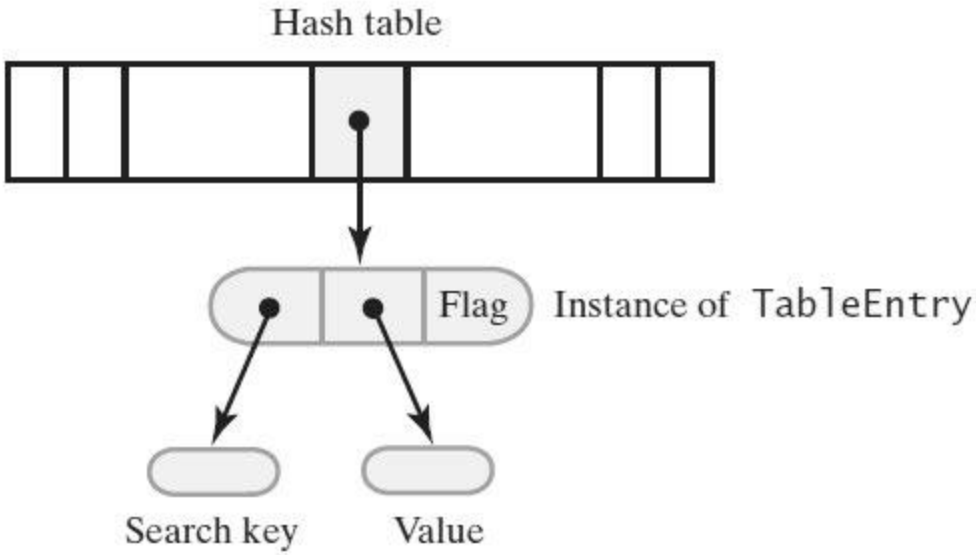

HashedDictionary

- Keep an internal table of entries
- Mark an entry as AVAILABLE as an entry with null values.
  - Note this can't be changed
- Define a load factor above which the table will be increased in size

```
public class HashedDictionary<K, V> implements DictionaryInterface<K, V> {
    // The dictionary:
    private int numberOfEntries;

    // capacity must be prime, which checkCapacity will automatically set
    // if this is set too low with quadratic probe, search time increases.
    private static final int DEFAULT_CAPACITY = 5;
    private static final int MAX_CAPACITY = 10000;

    // The hash table:
    private Entry<K, V>[] hashTable;

    private static final int MAX_SIZE = 2 * MAX_CAPACITY; // Max size of hash table
    private static final double MAX_LOAD_FACTOR = 0.5; // Fraction of hash table that can be filled

    private final Entry<K, V> AVAILABLE = new Entry<>(null, null);
```

Use a key/value Entry class

- Simple generic class to keep keys and values

```
protected final class Entry<K, V> {
        private K key;
        private V value;

        private Entry(K searchKey, V dataValue) {
                key = searchKey;
                value = dataValue;
        } // end constructor

        private K getKey() {
                return key;
        } // end getKey

        private V getValue() {
                return value;
        } // end getValue

        private void setValue(V newValue) {
                value = newValue;
        } // end setValue
} // end Entry
```

©Michael Hrybyk and Pearson Education NOT TO BE REDISTRIBUTED

Constructor

- Make the table size the next prime number up from what was asked.
- Also that the table has enough space re load factor (checkCapacity).

```
public HashedDictionary(int initialCapacity) {
        initialCapacity = checkCapacity(initialCapacity);
        numberOfEntries = 0; // Dictionary is empty

        // Set up hash table:
        // Initial size of hash table is same as initialCapacity if it is prime;
        // otherwise increase it until it is prime size
        int tableSize = getNextPrime(initialCapacity);
        checkSize(tableSize); // Check that the prime size is not too large

        // The cast is safe because the new array contains null entries
        @SuppressWarnings("unchecked")
        Entry<K, V>[] temp = (Entry<K, V>[]) new Entry[tableSize];
        hashTable = temp;

} // end constructor
```

Getting an index in the hash table

- Hash the key, and get an integer.
  - Adjust this so it is modulo the table length, so the hashes are distributed. (setHashIndex()).
  - This will be the starting index
- Then probe starting at the index and look for the key (see next slide)
- Returns a new index of an available entry or key itself.
- Remember, an available entry is either null or the AVAILABLE entry (null key and value).

```
/**
 * Get the next available hash index for the key
 * @param key
 * @return
 */
private int getHashIndex(K key) {
        int hashIndex = setHashIndex(key.hashCode());

        // Check for and resolve collision
        hashIndex = linearProbe(hashIndex, key);

        return hashIndex;
} // end getHashIndex


/**
 * Take a hashcode and make sure it fits in the hash table.
 * Wraparound if necessary using mod tablelength.
 * If the resulting index is < 0, add the table length to it.
 * @param index
 * @return index % tablelength
 */
private int setHashIndex(int index) {
        index = index % hashTable.length;
        if(index < 0)
                index = index + hashTable.length;

        return index;
}
```

Revised version of linear probe

```
private int linearProbe(int index, K key) {
      boolean found = false;

      // Index of first available location (from which an entry was removed)
      int availableIndex = -1;

      // start looking at keys at the index location, then increment until key is found

      while (!found && (hashTable[index] != null)) {

            // if there is an entry in the location test for equality

            if (hasAnEntry(index)) {
                  if(key.equals(hashTable[index].getKey()))
                              found = true; // Key found
            } else
            {
                  // Skip entries that were removed
                  // but save index of first location in removed state
                  if (availableIndex == -1)
                        availableIndex = index;

            }

            // if there was an entry but it wasn't the key, increment th
            // index and try again

            if(!found)
                  index = setHashIndex(index + 1); // Linear probing

      }

      // if the key is found return the location
      // if we didn't find the key and there are only null entries, return the first
      // null entry

      // otherwise, return the first available index

      if (found || (availableIndex == -1))
            return index; // Index of either key or null
      else
            return availableIndex; // Index of an available location
} // end linearProbe
```

Add method

- Hash the key and get the next available index
- If the slot is free, add the entry to the hash table
- If the key already exists, replace the value

```
public V add(K key, V value) {
        if ((key == null) || (value == null))
                throw new IllegalArgumentException("Cannot add null to a dictionary.");
        else {
                V oldValue; // Value to return

                // get the next available hash index for the key
                int index = getHashIndex(key);

                if (!hasAnEntry(index)) { // Key not found, so insert new entry
                        hashTable[index] = new Entry<>(key, value);
                        numberOfEntries++;
                        oldValue = null;
                } else { // Key found; get old value for return and then replace it
                        oldValue = hashTable[index].getValue();
                        hashTable[index].setValue(value);
                } // end if

                // Ensure that hash table is large enough for another add
                if (isHashTableTooFull())
                        enlargeHashTable();

                return oldValue;
        } // end if
} // end add
```

getValue algorithm for retrieval

```
Algorithm getValue(key)
// Returns the value associated with the given search key, if it is in the dictionary.
// Otherwise, returns null.
if (key is found)
   return value in found entry
else
   return null
```

getValue implementation

- Get the index by hashing the key
- If it exists, then just get the value using Entry getValue() method.

```
public V getValue(K key) {
    V result = null;

    int index = getHashIndex(key);

    if (hasAnEntry(index))
        result = hashTable[index].getValue(); // Key found; get value

    return result;
}
```

Pseudocode for method `remove`

```
Algorithm remove(key)
// Removes a specific entry from the dictionary, given its search key.
// Returns either the value that was associated with the search key or null if no such object
// exists.
removedValue = null
index = getHashIndex(key)
if (key is found) // hashTable[index] is not null and does not equal AVAILABLE
{
        removedValue = hashTable[index].getValue()
        hashTable[index] = AVAILABLE
        numberOfEntries--
}
return removedValue
```

remove method

- Hash the key and get the index.
- If it exists, get the value, then set the slot to AVAILABLE
  - key and value are null

```
public V remove(K key) {
        V removedValue = null;

        int index = getHashIndex(key); // get the location in the table

        if (hasAnEntry(index)) {
                // Key found; flag entry as removed and return its value
                removedValue = hashTable[index].getValue();
                hashTable[index] = AVAILABLE;
                numberOfEntries--;
        }

        return removedValue;
}
```

Algorithm for adding a new entry

```
Algorithm add(key, value)
// Adds a new key-value entry to the dictionary. If key is already in the dictionary,
// returns its corresponding value and replaces it in the dictionary with value.
if ((key == null) or (value == null))
                    Throw an exception
index = getHashIndex(key)
if (key is not found)
{ // Add entry to hash table
                    hashTable[index] = new Entry(key, value)
                    numberOfEntries++
                    oldValue = null
}
else // Search key is in table; replace and return entry's value
{
                    oldValue = hashTable[index].getValue()
                    hashTable[index].setValue(value)
}
// Ensure that hash table is large enough for another addition
if (hash table is too full)
                    Enlarge hash table
return oldValue
```

Increase hash table size

- Create a new table with a set of null entries
- Save the old one.
- Important: copy by iterating through the old table and **add()** the key/value pairs to the new one.
  - This **rehashes** all of the keys, so it is not an exact duplicate.

```
private void enlargeHashTable() {
      Entry<K, V>[] oldTable = hashTable;
      int oldSize = hashTable.length;
      int newSize = getNextPrime(oldSize + oldSize);
      checkSize(newSize); // Check that the prime size is not too large

      // The cast is safe because the new array contains null entries
      // increase the size of the array
      @SuppressWarnings("unchecked")
      Entry<K, V>[] tempTable = (Entry<K, V>[]) new Entry[newSize];

      // the internal table is now a larger array, but empty

      hashTable = tempTable;
      numberOfEntries = 0; // Reset number of dictionary entries, since
                                          // it will be incremented by add during rehash

      // Rehash dictionary entries from old array to the new and bigger array;
      // skip both null locations and removed entries
      // note use of add() to do this which rehashes keys

      for (int index = 0; index < oldSize; index++) {
            if ((oldTable[index] != null) && (oldTable[index] != AVAILABLE))
                  add(oldTable[index].getKey(), oldTable[index].getValue());
      }
}
```

Hash Tables and Iterators

- FIGURE 23-5 A hash table containing occupied elements, available elements, and null values

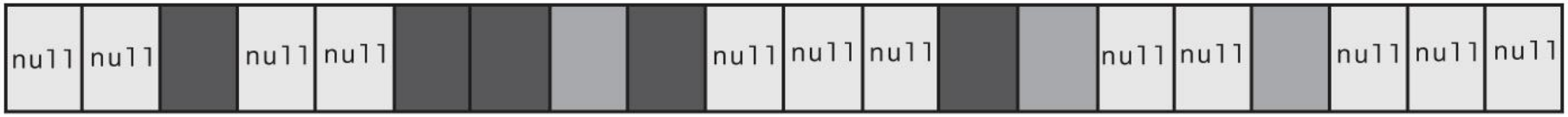

Dark gray = occupied with current entry
Medium gray = available location
Light gray = empty location (`null`)

© 2019 Pearson Education, Inc.

Key iterator

```
private class KeyIterator implements Iterator<K> {
      private int currentIndex; // Current position in hash table
      private int numberLeft; // Number of entries left in iteration

      private KeyIterator() {
            currentIndex = 0;
            numberLeft = numberOfEntries;
      } // end default constructor

      public boolean hasNext() {
            return numberLeft > 0;
      } // end hasNext

      public K next() {
            K result = null;

            if (hasNext()) {
                  // Skip table locations that do not contain a current entry
                  while (!hasAnEntry(currentIndex)) {
                        currentIndex++;
                  } // end while

                  result = hashTable[currentIndex].getKey();
                  numberLeft--;
                  currentIndex++;
            } else
                  throw new NoSuchElementException();

            return result;
      } // end next

      public void remove() {
            throw new UnsupportedOperationException();
      } // end remove
} // end KeyIterator
```

Value iterator

```
private class ValueIterator implements Iterator<V> {
      private int currentIndex;
      private int numberLeft;

      private ValueIterator() {
            currentIndex = 0;
            numberLeft = numberOfEntries;
      } // end default constructor

      public boolean hasNext() {
            return numberLeft > 0;
      } // end hasNext

      public V next() {
            V result = null;

            if (hasNext()) {
                  // Skip table locations that do not contain a current entry
                  while (!hasAnEntry(currentIndex)) {
                        currentIndex++;
                  } // end while

                  result = hashTable[currentIndex].getValue();
                  numberLeft--;
                  currentIndex++;
            } else
                  throw new NoSuchElementException();

            return result;
      } // end next

      public void remove() {
            throw new UnsupportedOperationException();
      } // end remove
} // end ValueIterator
```

Java Class Library: The Class `HashMap`

- Hash table is a collection of buckets
  - Each bucket contains several entries
- Variety of constructors provided
- Default maximum load factor of 0.75
  - When limit exceeded, size of table increased by rehashing
- Possible to avoid rehashing by setting number of buckets initially larger

Java Class Library: The Class `HashSet`

- Implements the interface **`java.util.Set`**
- **`HashSet`** uses an instance of the class **`HashMap`**
- Variety of constructors provided in class

©Michael Hrybyk and Pearson Education NOT TO BE REDISTRIBUTED