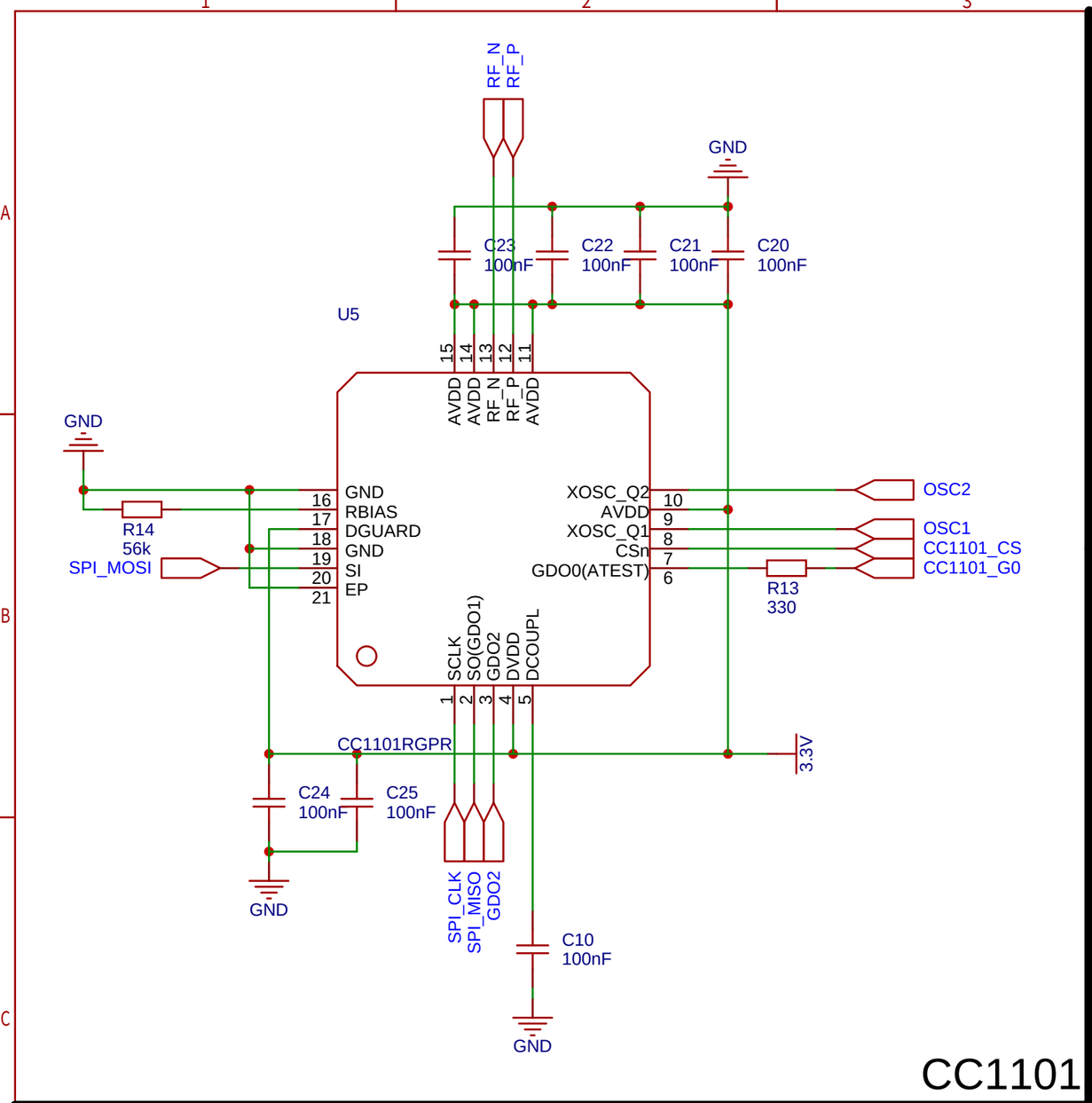

CC1101

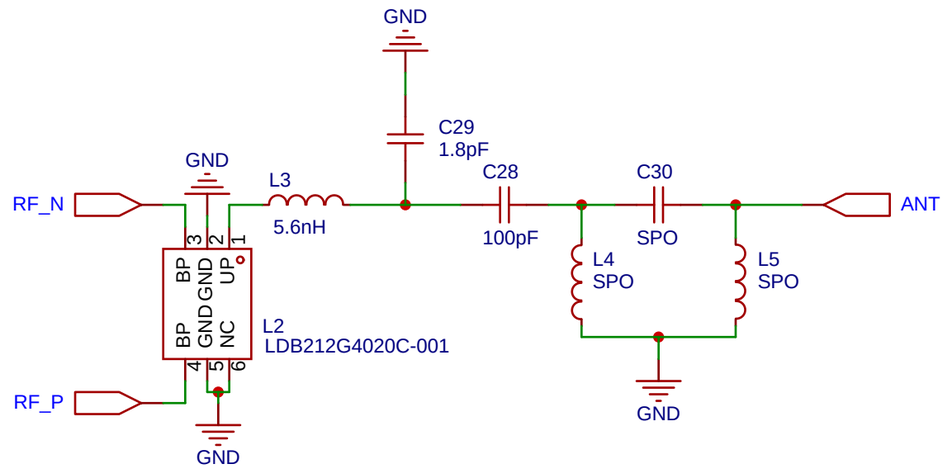

Balun

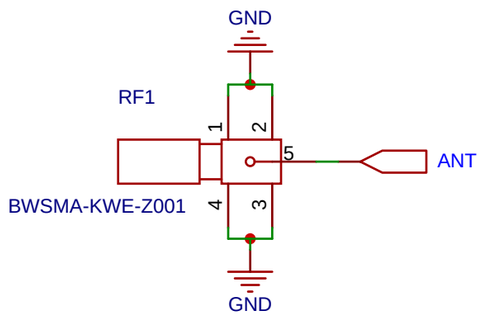

ANTENNA CONNECTOR

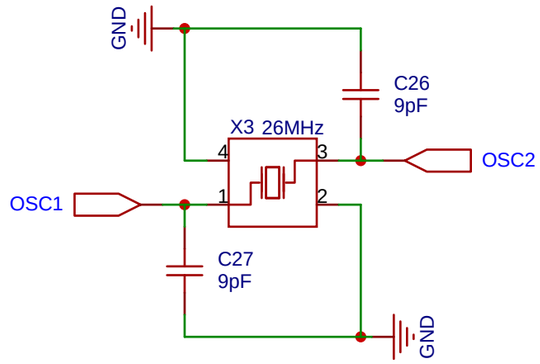

Oscillator

Schematic	V0.1	Update Date	2023-06-16
		Create Date	2023-06-16
Page	CC1101	Part Number	JLCPCB-002
Drawed	Koray Bilir	F_LightProto	
Reviewed	Koray Bilir		
		VER	SIZE	PAGE 2 OF 3
EasyEDA		V0.1	A4	FleeTime