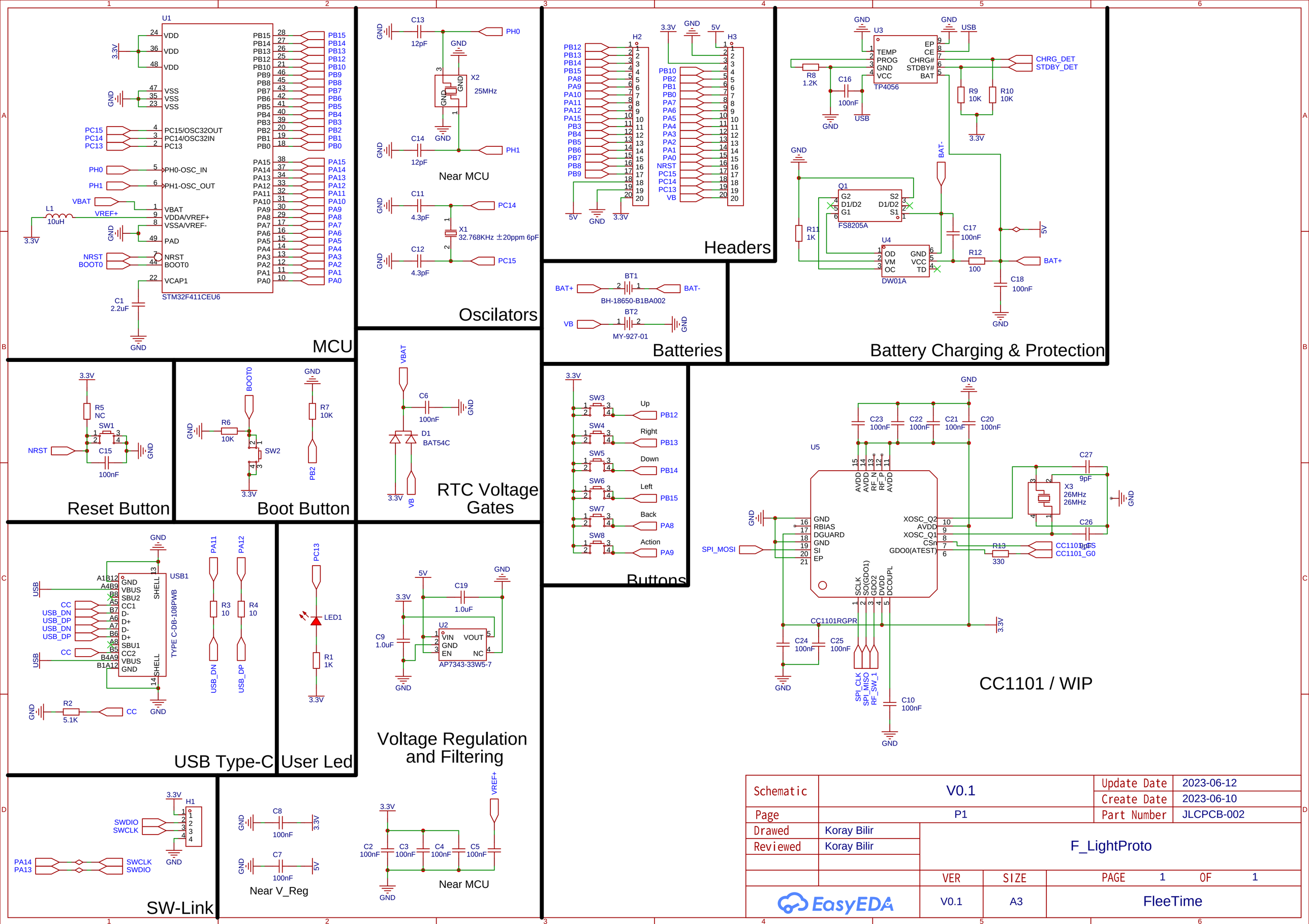

Schematic	V0.1	Update Date	2023-06-12
		Create Date	2023-06-10
Page	P1	Part Number	JLCPCB-002
Drawed	Koray Bilir	F_LightProto	
Reviewed	Koray Bilir		
		VER	SIZE	PAGE 1 OF 1
EasyEDA		V0.1	A3	FleeTime