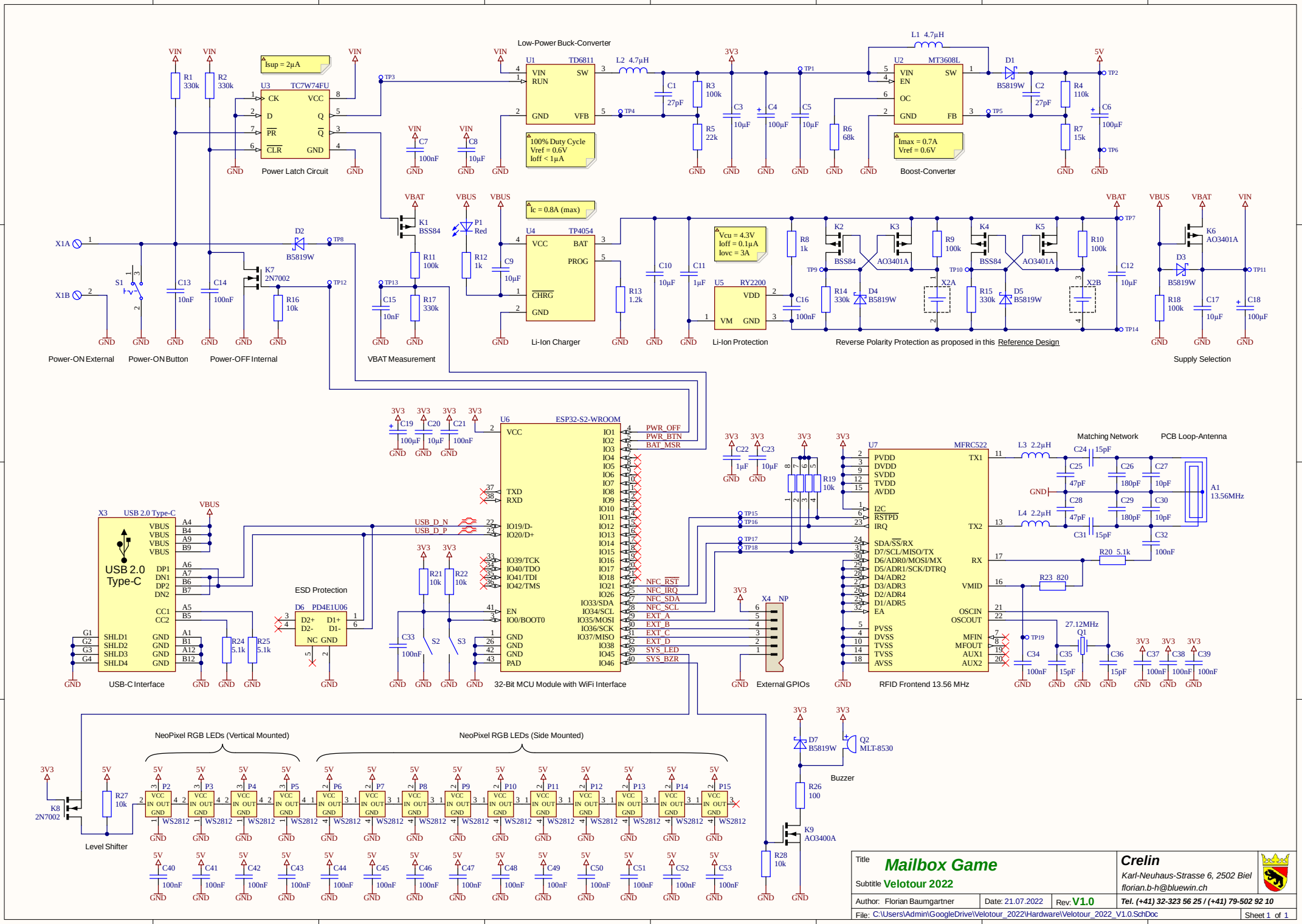
Low-Power Buck-Converter
Power Latch Circuit
Boost-Converter
Power-ON External
Power-ON Button
Power-OFF Internal
VBAT Measurement
Li-Ion Charger
Li-Ion Protection
Reverse Polarity Protection as proposed in this Reference Design
Supply Selection
USB-C Interface
ESD Protection
32-Bit MCU Module with WiFi Interface
External GPIOs
RFID Frontend 13.56 MHz
Matching Network
PCB Loop-Antenna
NeoPixel RGB LEDs (Vertical Mounted)
NeoPixel RGB LEDs (Side Mounted)
Level Shifter
Buzzer
Title
Mailbox Game
Subtitle
Velotour 2022
Crelin
Karl-Neuhaus-Strasse 6, 2502 Biel
florian.b-h@bluewin.ch
Tel. (+41) 32-323 56 25 / (+41) 79-502 92 10
Author: Florian Baumgartner
Date: 21.07.2022
Rev: V1.0
File: C:\Users\Admin\GoogleDrive\Velotour_2022\Hardware\Velotour_2022_V1.0.SchDoc
Sheet 1 of 1