TPS54331 3-A, 28-V Input, Step Down DC-DC Converter With Eco-mode

1 Features

- 3.5 to 28-V input voltage range
- Adjustable output voltage down to 0.8 V
- Integrated 80-mΩ high-side MOSFET supports up to 3-A continuous output current
- High efficiency at light loads with a pulse skipping Eco-mode
- Fixed 570-kHz switching frequency
- Typical 1-µA shutdown quiescent current
- Adjustable slow-start limits inrush currents
- Programmable UVLO threshold
- Overvoltage transient protection
- Cycle-by-cycle current limit, frequency foldback, and thermal shutdown protection
- Available in easy-to-use SOIC8 package or thermally-enhanced SOIC8 PowerPAD™ integrated circuit package
- Create a custom design using the TPS54331 with the WEBENCH® Power Designer
- Use TPS62933 for a 30 VIN converter with higher frequency, lower IQ and improved EMI

2 Applications

- Consumer applications such as set-top boxes, CPE equipment, LCD displays, peripherals, and battery chargers
- Industrial and car-audio power supplies
- 5-V, 12-V, and 24-V distributed power systems

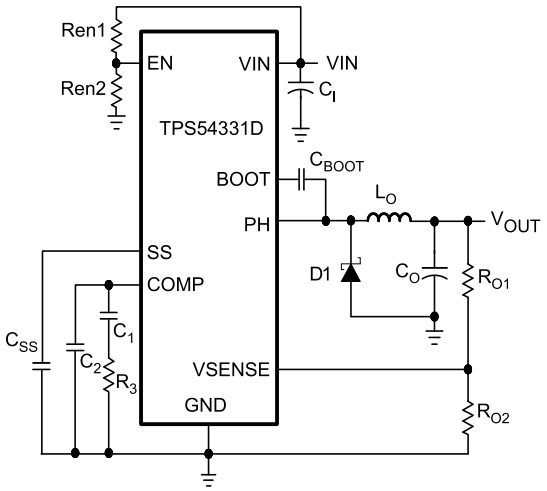

Simplified Schematic

3 Description

The TPS54331 device is a 28-V, 3-A non-synchronous buck converter that integrates a low $R_{DS(on)}$ high-side MOSFET. To increase efficiency at light loads, a pulse skipping Eco-mode feature is automatically activated. Furthermore, the 1-µA shutdown supply-current allows the device to be used in battery-powered applications. Current mode control with internal slope compensation simplifies the external compensation calculations and reduces component count while allowing the use of ceramic output capacitors. A resistor divider programs the hysteresis of the input undervoltage lockout. An overvoltage transient protection circuit limits voltage overshoots during start-up and transient conditions. A cycle-by-cycle current-limit scheme, frequency foldback and thermal shutdown protect the device and the load in the event of an overload condition. The TPS54331 device is available in an 8-pin SOIC package and 8-pin SO PowerPAD integrated circuit package that have been internally optimized to improve thermal performance.

Package Information

PART NUMBER	PACKAGE(1)	PACKAGE SIZE(2)
TPS54331	D (SOIC, 8)	4.90 mm × 6 mm
	DDA (SO PowerPAD, 8)	

(1) For all available packages, see the orderable addendum at the end of the data sheet.
(2) The package size (length × width) is a nominal value and includes pins, where applicable.

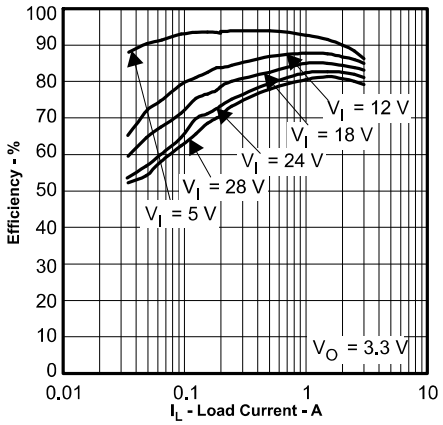

TPS54331 (D Package) Efficiency

An IMPORTANT NOTICE at the end of this data sheet addresses availability, warranty, changes, use in safety-critical applications, intellectual property matters and other important disclaimers. PRODUCTION DATA.

Table of Contents

1 Features....1
2 Applications....1
3 Description....1
4 Revision History....2
5 Pin Configuration and Functions....3
6 Specifications....4
6.1 Absolute Maximum Ratings....4
6.2 ESD Ratings....4
6.3 Recommended Operating Conditions....4
6.4 Thermal Information....5
6.5 Electrical Characteristics....5
6.6 Switching Characteristics....6
6.7 Typical Characteristics....7
7 Detailed Description....9
7.1 Overview....9
7.2 Functional Block Diagram....10
7.3 Feature Description....10
7.4 Device Functional Modes....13
8 Application and Implementation....14
8.1 Application Information....14
8.2 Typical Application....14
8.3 Power Supply Recommendations....25
8.4 Layout....25
9 Device and Documentation Support....28
9.1 Device Support....28
9.2 Support Resources....28
9.3 Receiving Notification of Documentation Updates....28
9.4 Trademarks....28
9.5 Electrostatic Discharge Caution....28
9.6 Glossary....28
10 Mechanical, Packaging, and Orderable Information....28

4 Revision History

NOTE: Page numbers for previous revisions may differ from page numbers in the current version.

Changes from Revision G (July 2022) to Revision H (September 2023)	Page
• Added the TPS62933 information to *Features*	1
• Updated trademark information	1
• Change column title from BODY SIZE to PACKAGE SIZE in the *Package Information* table	1
• Moved storage temperature to the *Absolute Maximum Ratings* table	4
• Change table title from *Handling Ratings* to *ESD Ratings*	4

Changes from Revision F (October 2014) to Revision G (July 2022)	Page
• Updated the numbering format for tables, figures and cross-references throughout the document.	1
• Updated Equation 2	10

Changes from Revision E (February 2012) to Revision F (October 2014)	Page
• Added *Handling Ratings* table, *Feature Description* section, *Device Functional* Modes, *Application and Implementation* section, *Power Supply Recommendations* section, *Layout* section, *Device and Documentation Support* section, and *Mechanical, Packaging, and Orderable Information* section.	1
• Updated the inductor current equations for $I_{L(RMS)}$ and $I_{L(PK)}$	16

Copyright © 2023 Texas Instruments Incorporated