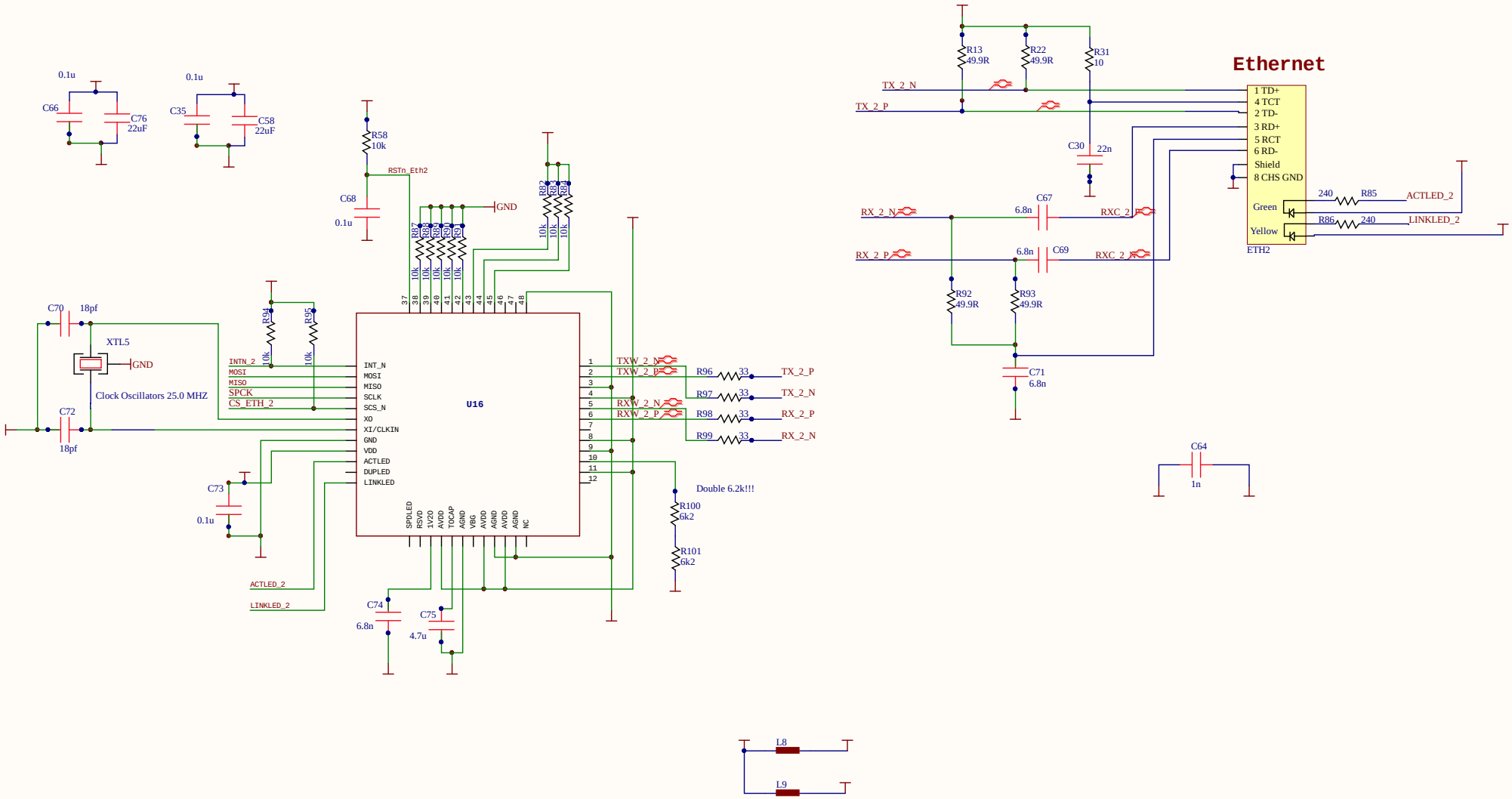

SPI - Ethernet

Title		
Size A3	Number	Revision
Date: 17.02.2026	Sheet of	
File: D:\IGAS_Transfer\..\ETH_HMI.SchDoc	Drawn By:	

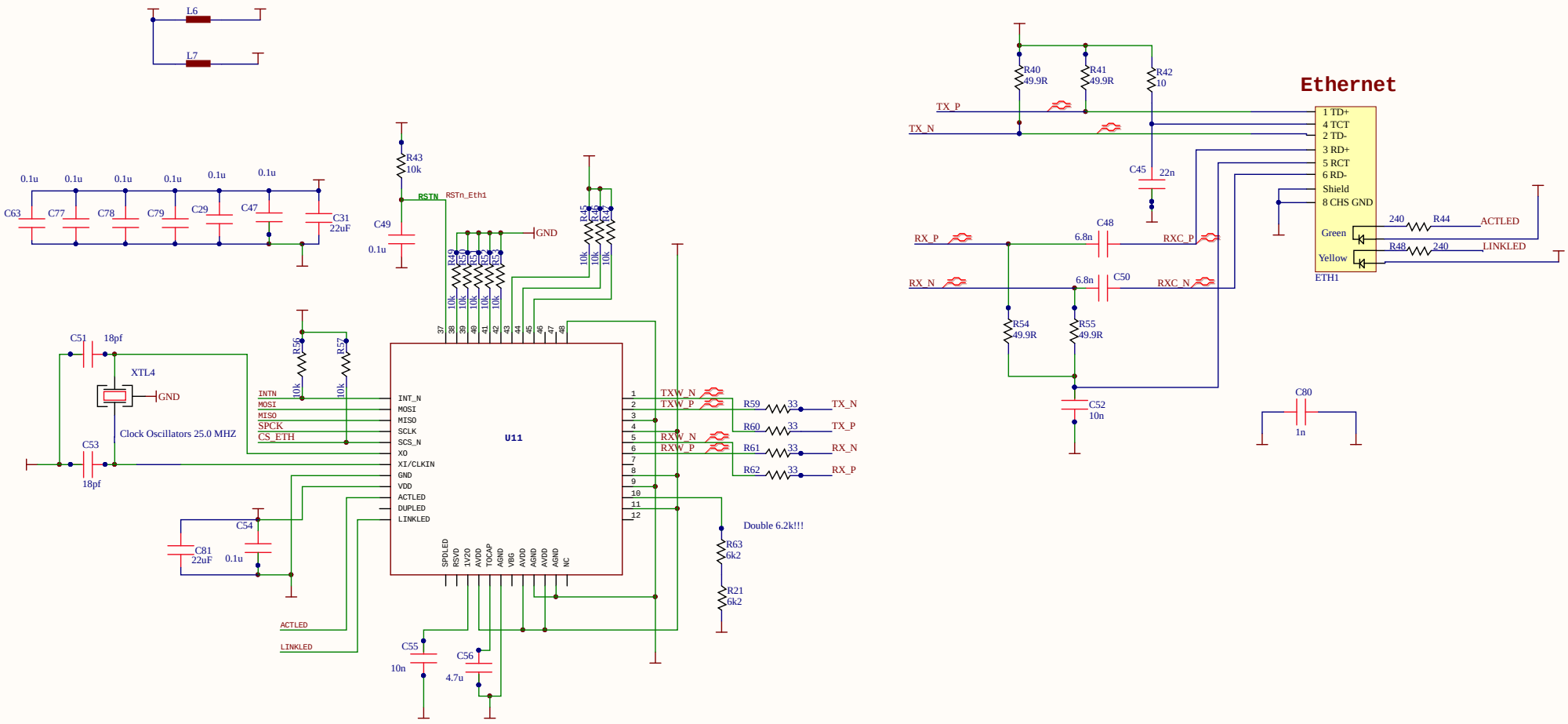

Title	SPI - Ethernet	
Size A3	Number	Revision
Date: 17.02.2026	Sheet of	
File: D:\IGAS_Transfer\..\Ethernet.SchDoc	Drawn By:	

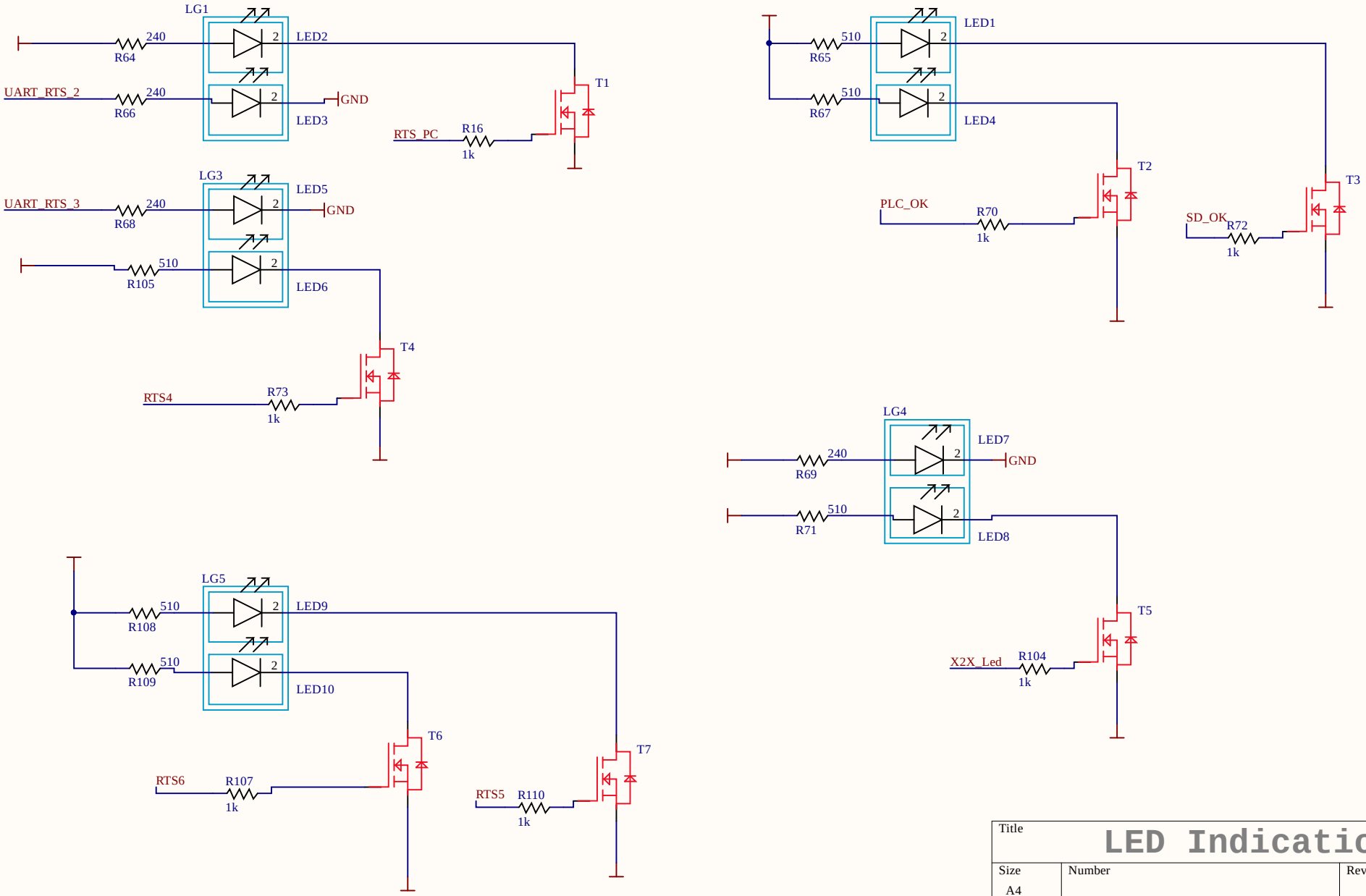

Title	LED Indication	
Size A4	Number	Revision
Date: 17.02.2026		Sheet of
File: D:\IGAS_Transfer\..\LEDs.SchDoc		Drawn By:

RS485 Lines

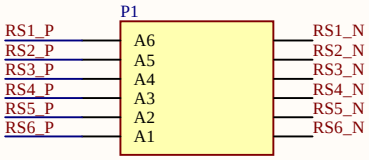

USB - Firmware/Debug

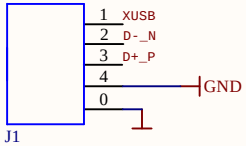

Ethernet

(on Eth Page)

CAN Bus X2X

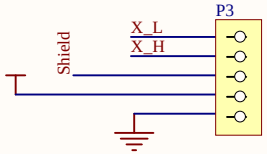

microSD Holder

(on SD Page)

Title	PLUGS	
Size A4	Number	Revision
Date: 17.02.2026		Sheet of
File: D:\IGAS_Transfer\..\Plugs.SchDoc		Drawn By:

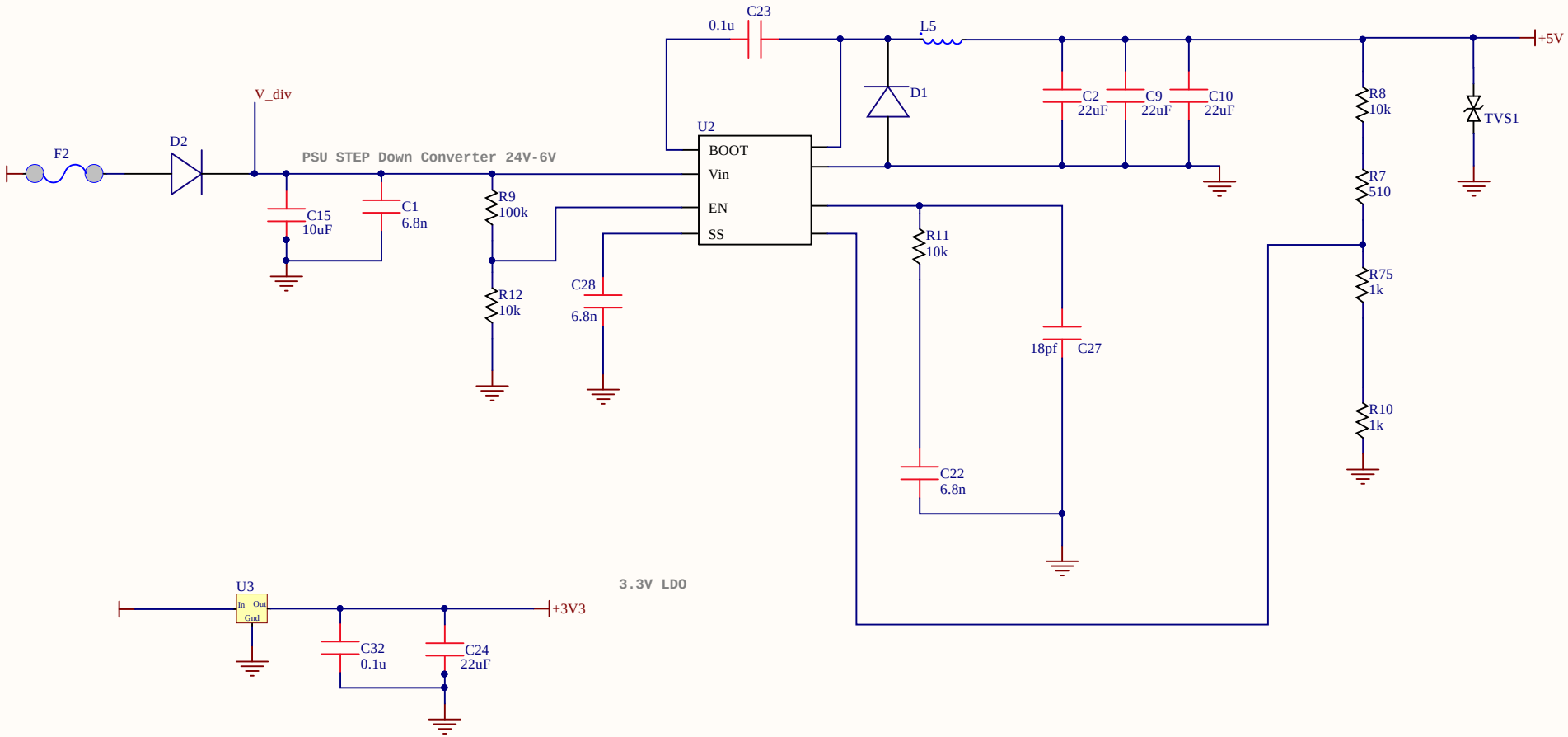

Title	PSU 24V-5V	
Size A4	Number	Revision
Date: 17.02.2026	Sheet of	
File: D:\IGAS_Transfer\..\Power Supply.SchDoc	Drawn By:	

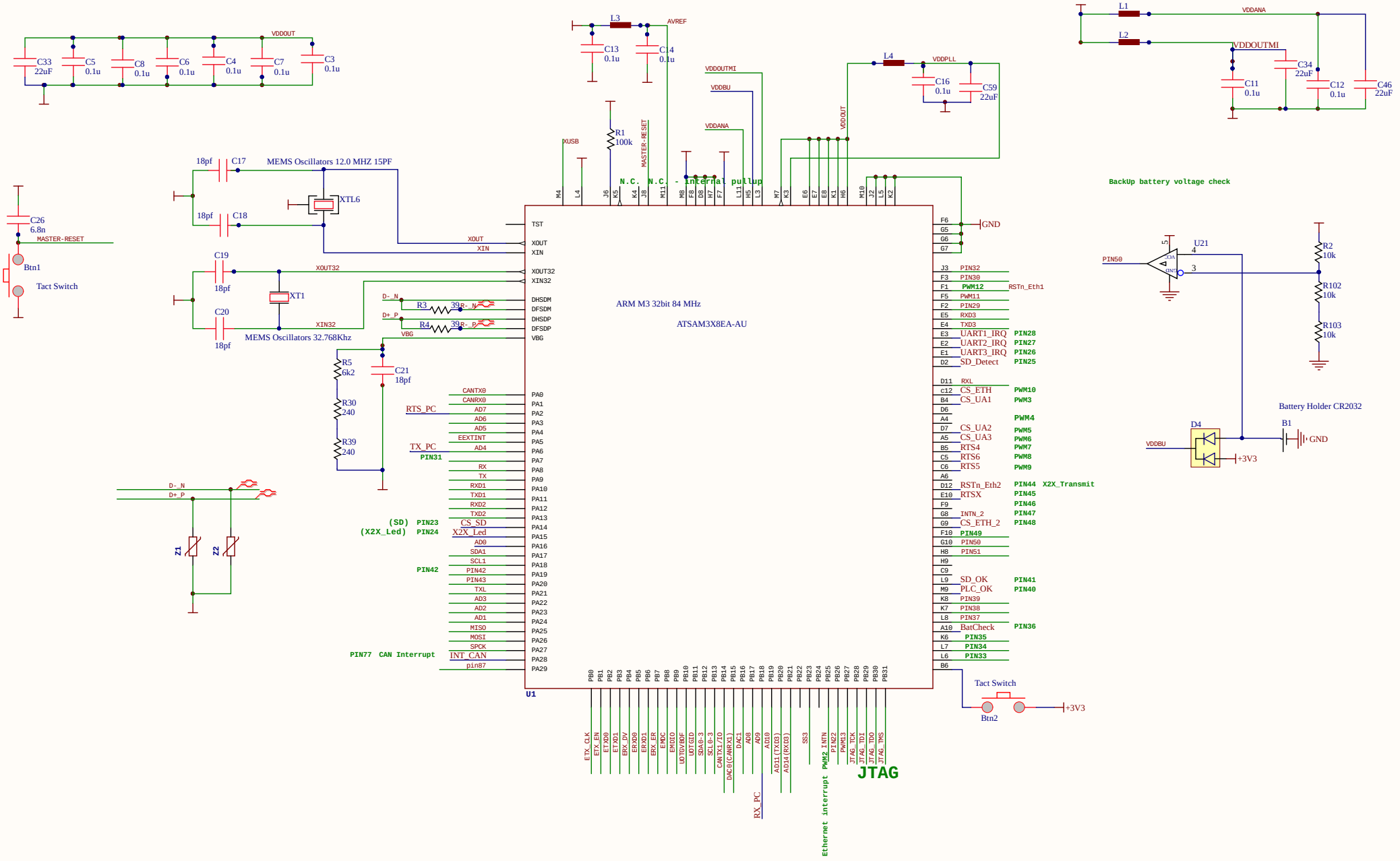

Title	CPU ARM_M3	
Size A3	Number	Revision
Date: 17.02.2026	Sheet of	
File: D:\IGAS_Transfer\..\Processor.SchDoc	Drawn By:	

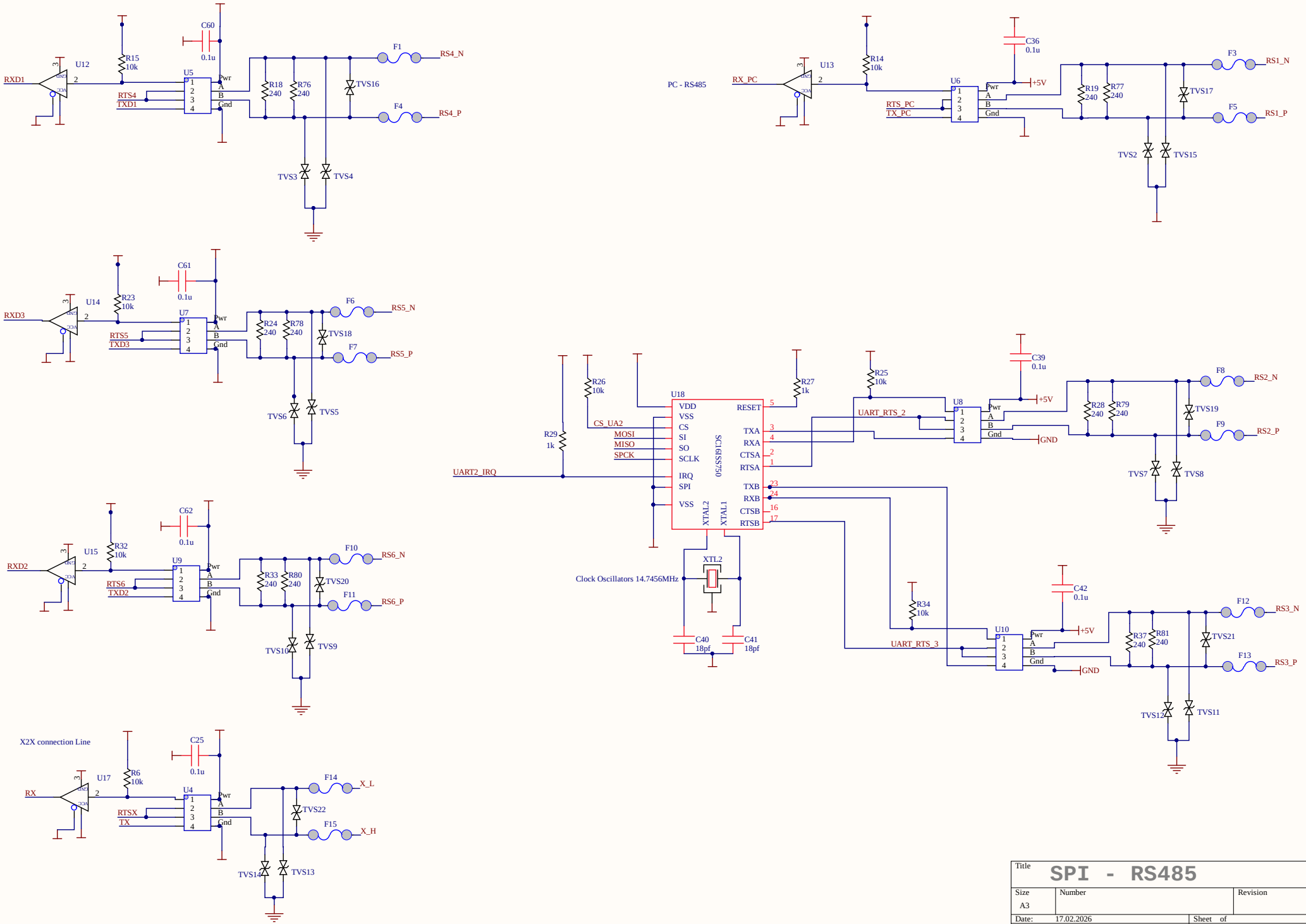

Title	SPI - RS485	
Size A3	Number	Revision
Date: 17.02.2026	Sheet of	
File: D:\IGAS_Transfer\..\RS485.SchDoc	Drawn By:	

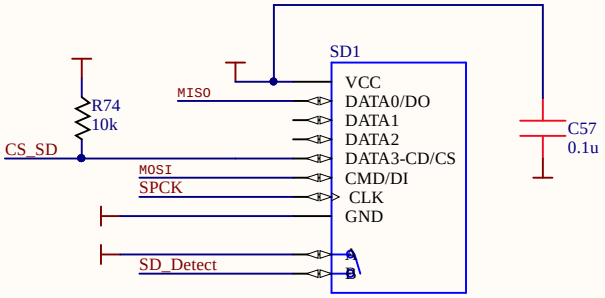

Title	SPI - MicroSD	
Size A4	Number	Revision
Date: 17.02.2026	Sheet of	
File: D:\IGAS_Transfer\..\SD Holder.SchDoc	Drawn By:	

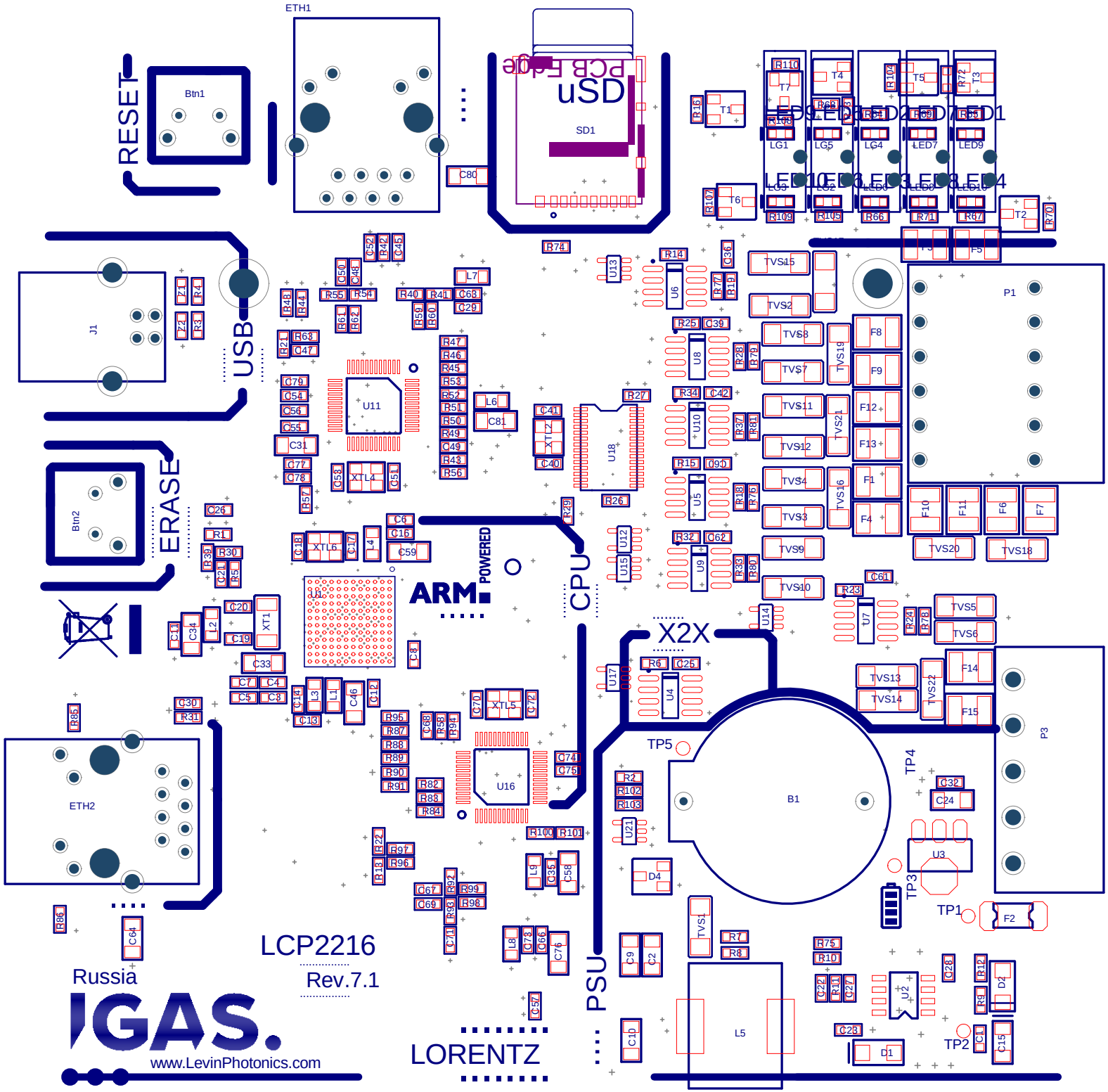
RESET
Btn1
ETH1
uSD
SD1
PCB Edge
LED9 LED2 LED7 LED1
LED10 LED6 LED3 LED8 LED4
USB
J1
ERASE
Btn2
ARM
POWERED
CPU
X2X
B1
P1
P3
ETH2
TP5
TP4
TP3
TP1
TP2
PSU
L5
LCP2216
Rev.7.1
Russia
IGAS.
www.LevinPhotonics.com
LORENTZ