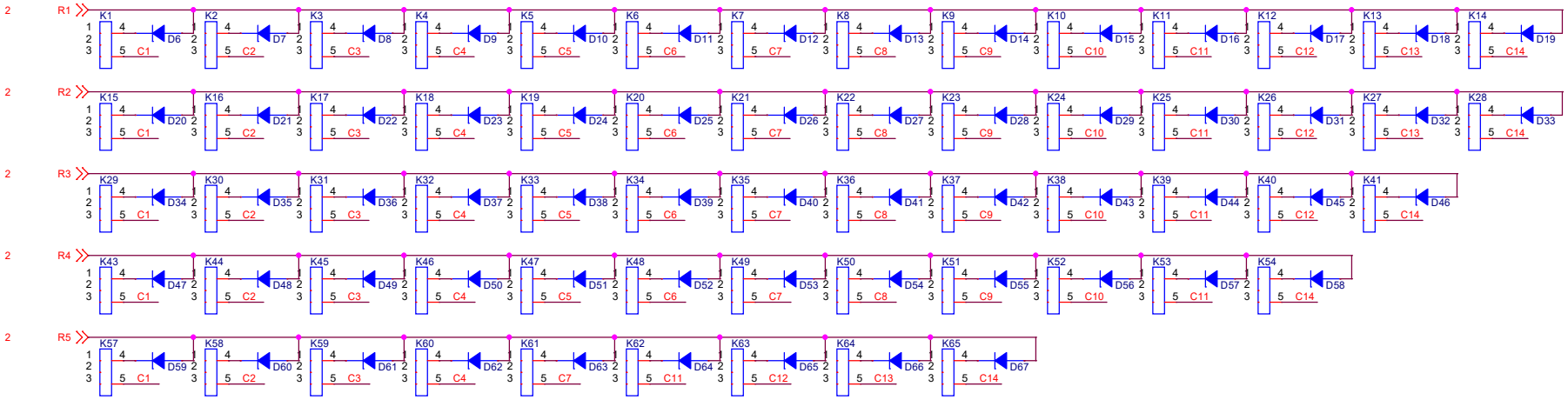

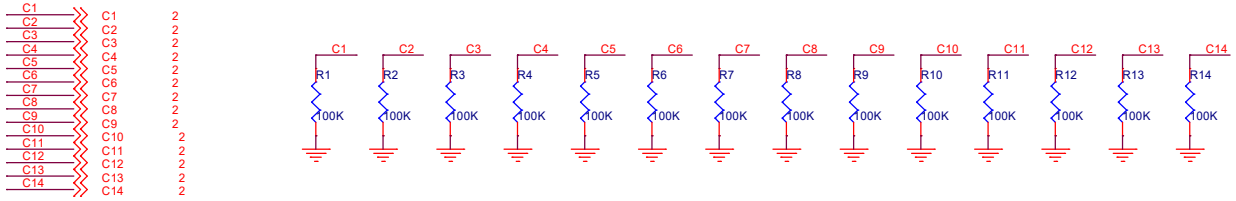

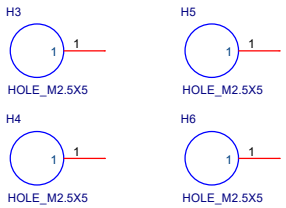

Title	<Title>	
Size A3	Document Number <Doc>	Rev <RevCode>
Date: Sunday, May 10, 2020	Sheet 1 of 1	

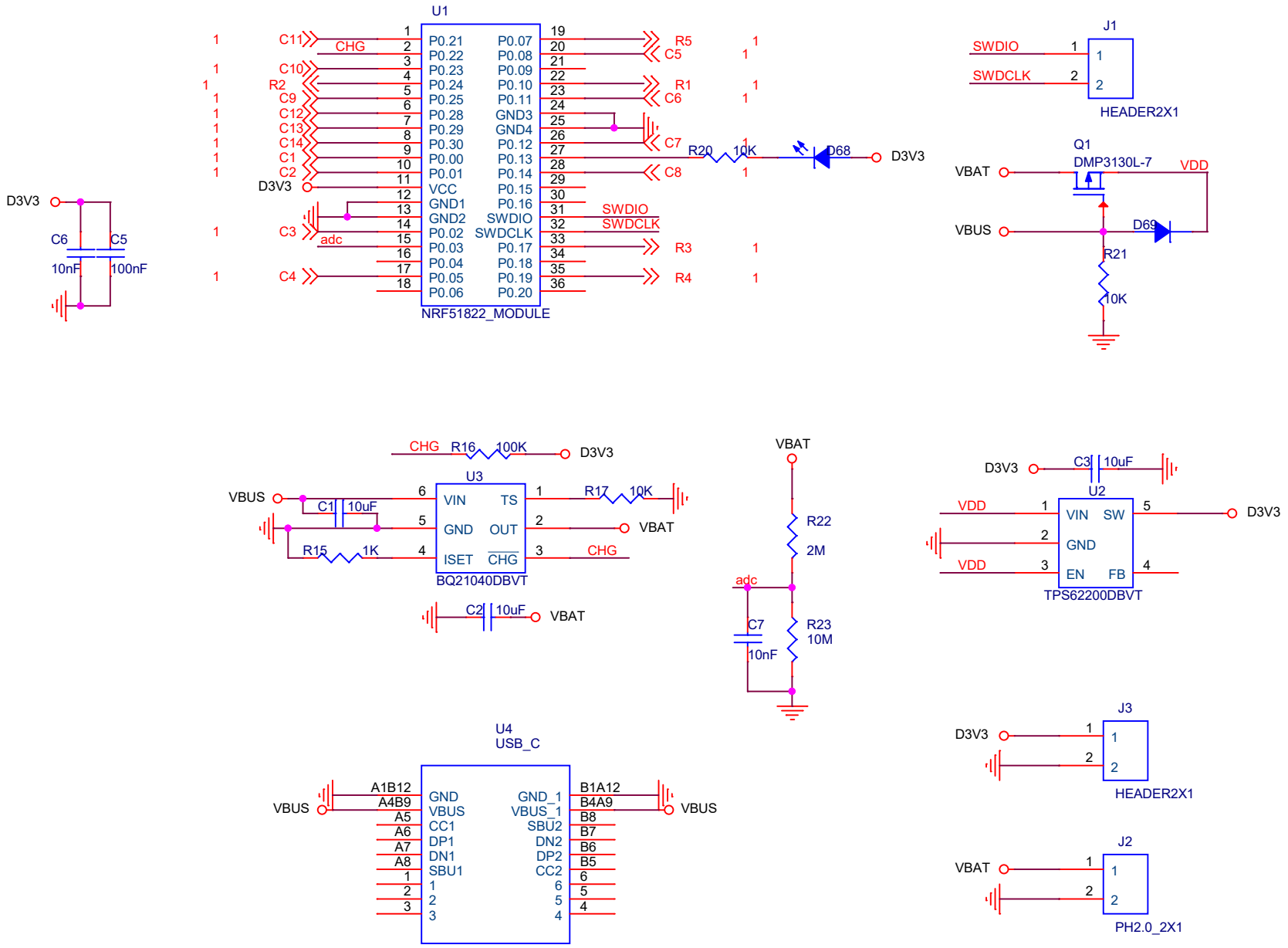

Title	<Title>	
Size A4	Document Number <Doc>	Rev <RevCo
Date: Monday, May 25, 2020	Sheet 2 of 2	