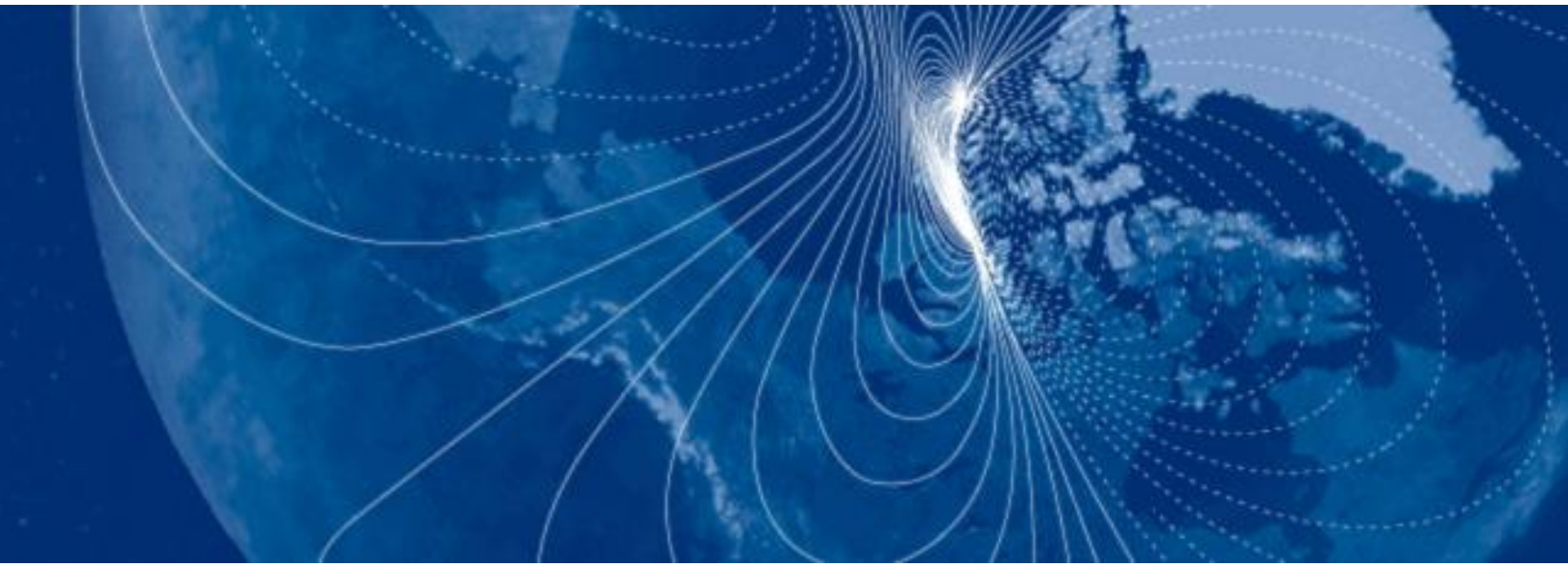

User Manual

RM3100 & RM2100

Geomagnetic Sensor

PNI SENSOR CORPORATION

Table of Contents

1 COPYRIGHT & WARRANTY INFORMATION 3
2 INTRODUCTION 4
3 SPECIFICATIONS 5
3.1 GEOMAGNETIC SENSOR CHARACTERISTICS 5
3.2 SEN-XY-F AND SEN-Z-F CHARACTERISTICS 6
3.3 MAGI2C CHARACTERISTICS 7
3.4 DIMENSIONS, PACKAGING, AND PAD & MASK LAYOUT 8
3.4.1 Sen-XY-f 8
3.4.2 Sen-Z-f 10
3.4.3 MagI2C 12
3.5 SOLDERING 13
4 GEOMAGNETIC SENSOR OVERVIEW & SET-UP 15
4.1 OVERVIEW 15
4.2 LAYOUT 17
4.2.1 Sensor Coil Orientation 17
4.2.2 Local Magnetic Field Considerations 18
4.2.3 Other Layout Considerations 19
4.3 MAGI2C PIN-OUT 19
4.3.1 General Pins 19
4.3.2 SPI Pins 21
4.3.3 I^2C Pins 22
4.4 SPI TIMING REQUIREMENTS 23
4.5 I^2C REQUIREMENTS 25
4.5.1 I^2C Register Write 25
4.5.2 I^2C Register Read 26
5 MAGI2C OPERATION 27
5.1 SET THE CYCLE COUNT REGISTERS (0X04 – 0X09) 28
5.2 INITIATE CONTINUOUS MEASUREMENT MODE (0X01) 29
5.2.1 Setting the CMM Update Rate with TMRC (0x0B) 30
5.2.2 Alarm Mode 31
5.3 INITIATE A SINGLE MEASUREMENT (0X00) 34
5.4 CONFIRM NEW DATA READY 35
5.4.1 STATUS Register (0x34) 35
5.5 READ THE MEASUREMENT RESULTS 35
5.6 TROUBLESHOOTING AND GENERAL INFORMATION 36
5.6.1 Built-In Self Test Register (0x33) 36
5.6.2 HSHAKE Register (0x35) 37
5.6.3 REVID Register (0x36) 38
5.7 EXAMPLES USING THE SPI INTERFACE 38
5.7.1 Set the Cycle Count Registers 38
5.7.2 Making and Reading Measurements 39
5.8 EXAMPLES USING THE I^2C INTERFACE 41
5.8.1 Set the Cycle Count Registers 41
5.8.2 Initiate a Single Measurement 42
5.8.3 Initiate Continuous Measurement Mode 42
5.8.4 Read the Measurement Results 42

List of Figures

Figure 3-1: Sen-XY-f Sensor Dimensions 8
Figure 3-2: Sen-XY-f Tape and Reel Dimensions 9
Figure 3-3: Sen-XY-f Recommended Solder Pad, Paste, & Mask Layout 9
Figure 3-4: Sen-Z-f Sensor Dimensions 10
Figure 3-5: Sen-Z-f Tape and Reel Dimensions 11
Figure 3-6: Sen-Z-f Recommended Solder Pad, Paste, & Mask Layout 11
Figure 3-7: MagI2C MLF Mechanical Drawing 12
Figure 3-8: MagI2C MLF Tape Dimensions 13
Figure 3-9: Recommended Solder Reflow Profile 14
Figure 4-1: RM3100 reference schematic – SPI Configuration 15
Figure 4-2: RM3100 reference schematic – I^2C Configuration 16
Figure 4-3: LR Oscillator Circuit Biasing Diagram 17
Figure 4-4: RM3100 North-East-Down (NED) Sensor Layout 18
Figure 4-5: SPI Timing Diagram, CPOL = CPHA = 0 24
Figure 4-6: SPI Timing Diagram, CPOL = CPHA = 1 24
Figure 5-1: SPI Activity Sequence Diagram 39

List of Tables

Table 3-1: Geomagnetic Sensor Performance 5
Table 3-2: Sen-XY-f and Sen-Z-f Absolute Maximum Ratings 6
Table 3-3: Sen-XY-f and Sen-Z-f Characteristics 6
Table 3-4: MagI2C Absolute Maximum Ratings 7
Table 3-5: MagI2C Recommended Operating Conditions 7
Table 3-6: Recommended Solder Processing Parameters 14
Table 4-1: MagI2C Pin Assignments 20
Table 4-2: SPI Timing Specifications 25
Table 5-1: MagI2C Register Map 27
Table 5-2: Cycle Count Registers 28
Table 5-3: Continuous Mode DRDY Options 30
Table 5-4: CMM Update Rates 31
Table 5-5: Alarm Lower and Upper Limit Registers 32
Table 5-6: Alarm Hysteresis Registers 33
Table 5-7: Absolute vs. Relative Alarm Mode Example 34
Table 5-8: Measurement Results Registers 36
Table 5-9: BIST Timeout Period 37
Table 5-10: BIST LR Periods 37

1 Copyright & Warranty Information

© Copyright PNI Sensor Corporation 2013

All Rights Reserved. Reproduction, adaptation, or translation without prior written permission is prohibited, except as allowed under copyright laws.

Revised March 2014: for the most recent version visit our website at www.pnicorp.com

PNI Sensor Corporation
2331 Circadian Way
Santa Rosa, CA 95407, USA
Tel: (707) 566-2260
Fax: (707) 566-2261

Warranty and Limitation of Liability. PNI Sensor Corporation ("PNI") manufactures its Products from parts and components that are new or equivalent to new in performance. PNI warrants that each Product to be delivered hereunder, if properly used, will, for ninety (90) days following the date of shipment unless a different warranty time period for such Product is specified: (i) in PNI's Price List in effect at time of order acceptance; or (ii) on PNI's web site (www.pnicorp.com) at time of order acceptance, be free from defects in material and workmanship and will operate in accordance with PNI's published specifications and documentation for the Product in effect at time of order. PNI will make no changes to the specifications or manufacturing processes that affect form, fit, or function of the Product without written notice to the Customer, however, PNI may at any time, without such notice, make minor changes to specifications or manufacturing processes that do not affect the form, fit, or function of the Product. This warranty will be void if the Products' serial number, or other identification marks have been defaced, damaged, or removed. This warranty does not cover wear and tear due to normal use, or damage to the Product as the result of improper usage, neglect of care, alteration, accident, or unauthorized repair.

THE ABOVE WARRANTY IS IN LIEU OF ANY OTHER WARRANTY, WHETHER EXPRESS, IMPLIED, OR STATUTORY, INCLUDING, BUT NOT LIMITED TO, ANY WARRANTY OF MERCHANTABILITY, FITNESS FOR ANY PARTICULAR PURPOSE, OR ANY WARRANTY OTHERWISE ARISING OUT OF ANY PROPOSAL, SPECIFICATION, OR SAMPLE. PNI NEITHER ASSUMES NOR AUTHORIZES ANY PERSON TO ASSUME FOR IT ANY OTHER LIABILITY.

If any Product furnished hereunder fails to conform to the above warranty, Customer's sole and exclusive remedy and PNI's sole and exclusive liability will be, at PNI's option, to repair, replace, or credit Customer's account with an amount equal to the price paid for any such Product which fails during the applicable warranty period provided that (i) Customer promptly notifies PNI in writing that such Product is defective and furnishes an explanation of the deficiency; (ii) such Product is returned to PNI's service facility at Customer's risk and expense; and (iii) PNI is satisfied that claimed deficiencies exist and were not caused by accident, misuse, neglect, alteration, repair, improper installation, or improper testing. If a Product is defective, transportation charges for the return of the Product to Customer within the United States and Canada will be paid by PNI. For all other locations, the warranty excludes all costs of shipping, customs clearance, and other related charges. PNI will have a reasonable time to make repairs or to replace the Product or to credit Customer's account. PNI warrants any such repaired or replacement Product to be free from defects in material and workmanship on the same terms as the Product originally purchased.

Except for the breach of warranty remedies set forth herein, or for personal injury, PNI shall have no liability for any indirect or speculative damages (including, but not limited to, consequential, incidental, punitive and special damages) relating to the use of or inability to use this Product, whether arising out of contract, negligence, tort, or under any warranty theory, or for infringement of any other party's intellectual property rights, irrespective of whether PNI had advance notice of the possibility of any such damages, including, but not limited to, loss of use, revenue or profit. In no event shall PNI's total liability for all claims regarding a Product exceed the price paid for the Product. PNI neither assumes nor authorizes any person to assume for it any other liabilities.

Some states and provinces do not allow limitations on how long an implied warranty lasts or the exclusion or limitation of incidental or consequential damages, so the above limitations or exclusions may not apply to you. This warranty gives you specific legal rights and you may have other rights that vary by state or province.

2 Introduction

Thank you for purchasing PNI Sensor Corporation's RM2100 or RM3100 Geomagnetic Sensor, pn 90052 or pn 90053, respectively. The RM2100 is comprised of two Sen-XY-f sensor coils, pn 13104, and a MagI2C ASIC controller, pn 13156, which forms the basis for a 2-axis digital compass. The RM3100 is the same as the RM2100 but adds a Sen-Z-f sensor coil, pn 13101, such that compassing measurements are not constricted to the horizontal plane.

PNI's geomagnetic sensor technology provides high resolution, low power consumption, large signal noise immunity, a large dynamic range, and high sampling rates. Measurements are stable over temperature and inherently free from offset drift. The RM3100's MagI2C ASIC features both continuous measurement mode and single measurement polling, an alarm feature for monitoring magnetic field strength, software-configurable resolution and sample rate, and the ability to operate one, two, or three PNI sensor coils. And it incorporates both I^2C and SPI interfaces for system design flexibility.

When implementing an RM3100 or RM2100 Geomagnetic Sensor, each sensor coil serves as the inductive element in a simple LR relaxation oscillation circuit, where the coil's effective inductance is proportional to the magnetic field parallel to the sensor axis. The LR circuit is driven by the MagI2C ASIC, and the MagI2C's internal clock is used to measure the circuit's oscillation frequency, and hence the magnetic field. Since PNI's Geomagnetic Sensor works in the frequency domain, resolution and noise are established cleanly by the number of MagI2C internal clock counts (cycle counts). In comparison, fluxgate and MR technologies require expensive and complex signal processing to obtain similar resolution and noise, and in many respects the geomagnetic sensor's performance simply cannot be matched. Also, the output from the MagI2C is inherently digital and can be fed directly into a microprocessor, eliminating the need for signal conditioning or an analog/digital interface between the sensor and a microprocessor. The simplicity of PNI's geomagnetic sensor combined with the lack of signal conditioning makes it easier and less expensive to implement than alternative fluxgate or magneto-resistive (MR) technologies.

For more information on PNI's magneto-inductive sensor technology, see PNI's whitepaper "Magneto-Inductive Technology Overview" at http://www.pnicorp.com/technology/papers.

3 Specifications

3.1 Geomagnetic Sensor Characteristics

Table 3-1: Geomagnetic Sensor Performance[1]

Parameter	Cycle Counts[2]			Units
	50	100	200	
Field Measurement Range[3]	-800 to +800			μT
Gain	20	38	75	LSB/μT
Sensitivity	50	26	13	nT
Noise	30	20	15	nT
Noise Density @ Max. Single-Axis Sample Rate	1.2			nT/√Hz
Repeatability over ±200 μT	15	8	8	nT
Hysteresis over ±200 μT	15			nT
Linearity over ±200 μT	0.5			%
Maximum Single-Axis Sample Rate (divide by 3 for max. 3-axis sample rate)	1600	850	440	Hz
Single-Axis Average Current @ 24 Hz Sample Rate (equivalent to 3-axis @ 8 Hz)	70	135	260	μA
Bias Resistor, R_b	121			Ω
External Timing Resistor for Clock, R_{EXT}	33			kΩ
Circuit Oscillation Frequency	180			kHz
Operating Temperature	-40 to +85			C

Footnotes:

1. Performance values are typical. Performance specifications established with a supply voltage of 3.0 V, a bias resistor of 121 Ω, an external timing resistor of 33 kΩ, and with measurements taken at room temperature. Other bias resistors, external timing resistors and operating voltages may be used, but performance will differ from the values listed. Contact PNI for additional information.
2. The cycle count setting (eg. 50 ,100, and 200) is user-configurable and set in the Cycle Count Registers. See Section 4.1 for a discussion on how the RM3100 works, and Section 5.1 for how to set the Cycle Count Registers.
3. Field measurement range is defined as the monotonic region of the output characteristic curve. Field measurement range can be extended using different bias resistors.

3.2 Sen-XY-f and Sen-Z-f Characteristics

Table 3-2: Sen-XY-f and Sen-Z-f Absolute Maximum Ratings

Parameter	Minimum	Maximum	Units
Input Pin Current @ 25 C		50	mA
Voltage Across Coil		2.0	VDC
Storage Temperature	-40	+85	C

CAUTION:

Stresses beyond those listed above may cause permanent damage to the device. These are stress ratings only. Assuming operation with the MagI2C per the guidelines in this manual, these maximum ratings will not be violated.

Table 3-3: Sen-XY-f and Sen-Z-f Characteristics

Parameter		Min	Typical	Max	Units
Inductance[1]			500-600		μH
DC resistance @ 25C ±15C		30		45	Ω
Resistance versus temperature			0.4		%/C
Weight	Sen-XY-f		0.06 [0.002]		gm [oz]
	Sen-Z-f		0.09 [0.003]		gm [oz]
Operating Temperature		-40		+85	C

Footnote:

1. 1 V peak-to-peak across the coil @ 100 kHz sinewave. No DC bias resistance. Measured orthogonal to Earth's magnetic field.

3.3 MagI2C Characteristics

Table 3-4: MagI2C Absolute Maximum Ratings

Parameter	Minimum	Maximum	Units
Analog/Digital DC Supply Voltage, AV_{DD} & DV_{DD}	-0.3	+3.7	VDC
Input Pin Voltage	-0.3	AV_{DD} or DV_{DD}	VDC
Input Pin Current @ 25C	-10.0	+10.0	mA
Storage Temperature	-40°	+125°	C

CAUTION:

Stresses beyond those listed above may cause permanent damage to the device. These are stress ratings only. Operation of the device at these or other conditions beyond those indicated in the operational sections of the specifications is not implied.

Table 3-5: MagI2C Recommended Operating Conditions

Parameter		Symbol	Min	Typ	Max	Units
Analog/Digital DC Supply Voltage[1]		AV_{DD}, DV_{DD}	2.0	3.0	3.6	VDC
Supply Voltage Difference (DV_{DD}-AV_{DD})	During Operation	ΔV_{DD_OP}	-0.1	0	+0.1	VDC
	Analog Unpowered	ΔV_{DD_OFF}	DV_{DD}-0.1	DV_{DD}	DV_{DD}+0.1	VDC
Voltage Ripple on AV_{DD} or DV_{DD}		V_{DD_ripple}			0.05	V_{PP}
High level input voltage		V_{IH}	0.7*DV_{DD}		DV_{DD}	VDC
Low level input voltage		V_{IL}	0		0.3*DV_{DD}	VDC
High level output current		I_{OH}			-1	mA
Low level output current		I_{OL}	1			mA
Idle Mode Current					1	µA
Leakage Current @ DV_{DD} pin (AV_{DD}=AV_{SS}=DV_{SS}=0V, DV_{DD}=3.6V)					100	nA
Operating Temperature		T_{OP}	-40		+85	C

Footnote:

1. Please contact PNI if operation at <2.0 V is required.

3.4 Dimensions, Packaging, and Pad & Mask Layout

3.4.1 Sen-XY-f

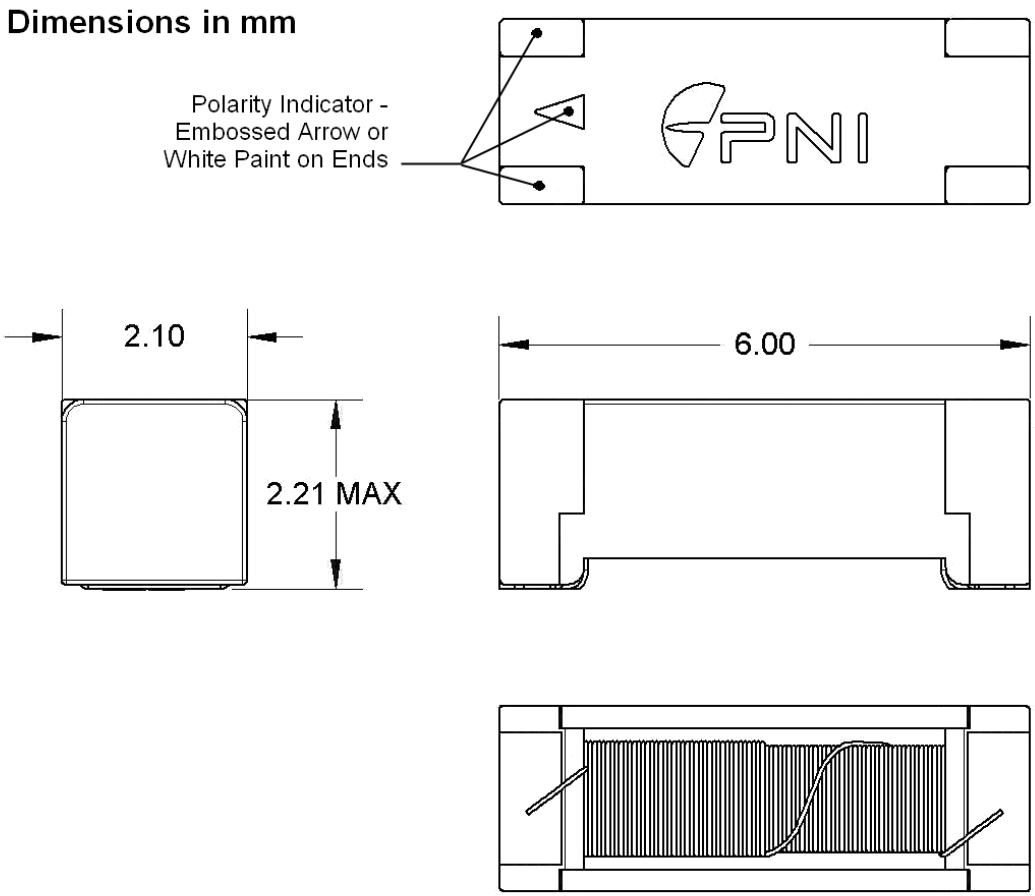

Figure 3-1: Sen-XY-f Sensor Dimensions

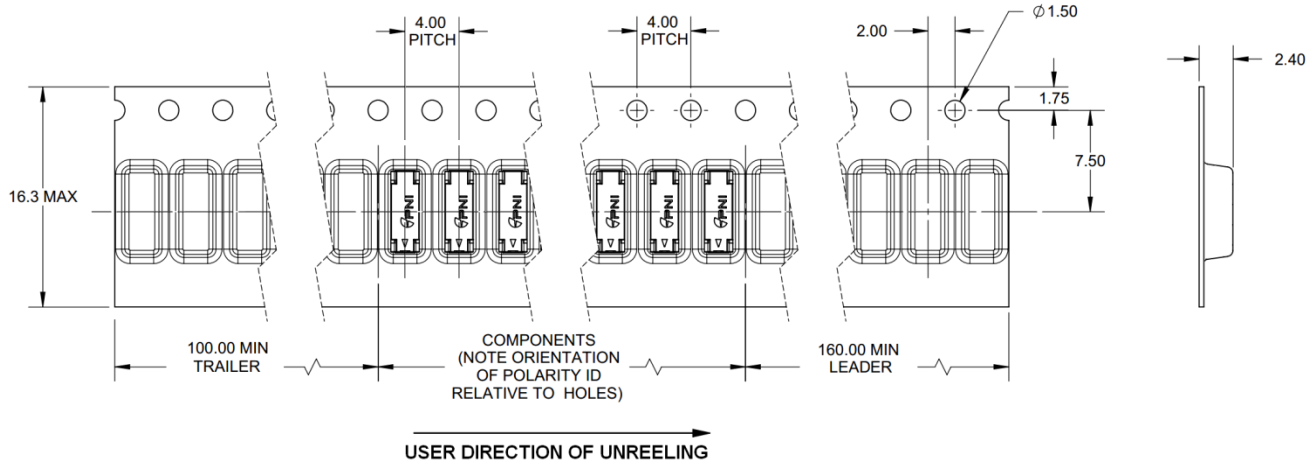

Dimensions in mm
Full reel is 5000 pcs. Smaller quantities on cut tape.
Tape & reel meets ANSI/EIA standard EIA-418-B

Figure 3-2: Sen-XY-f Tape and Reel Dimensions

Dimensions in mm

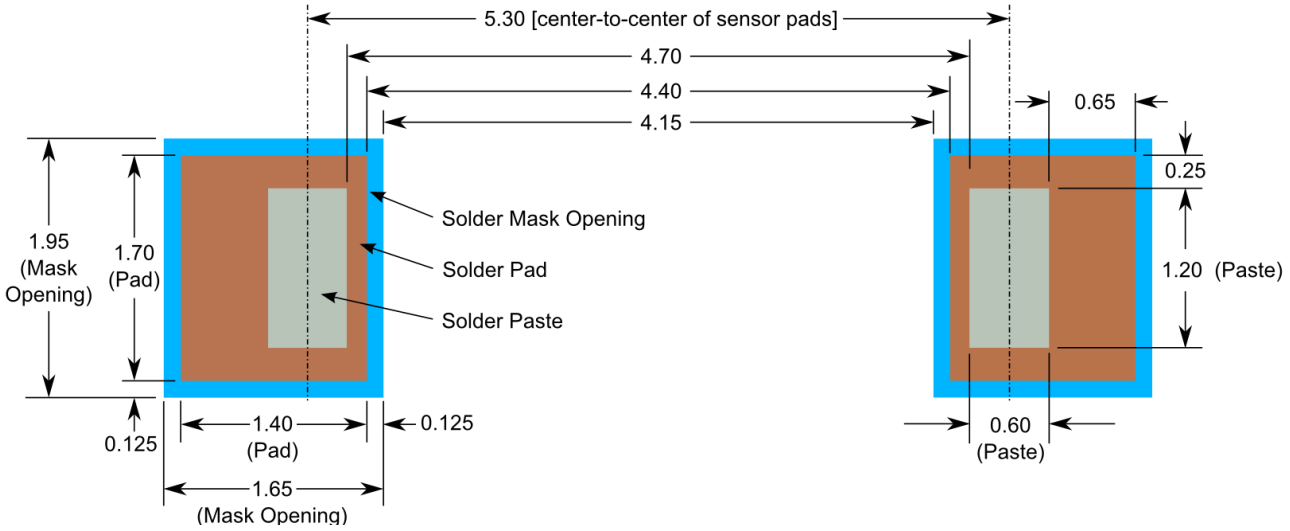

Note: *PNI recommends a 5 mil stencil. The solder paste area is much smaller than the pad to reduce sensor tilt and misalignment. The above layout allows for rework: for minimal footprint, contact PNI.*

Figure 3-3: Sen-XY-f Recommended Solder Pad, Paste, & Mask Layout

3.4.2 Sen-Z-f

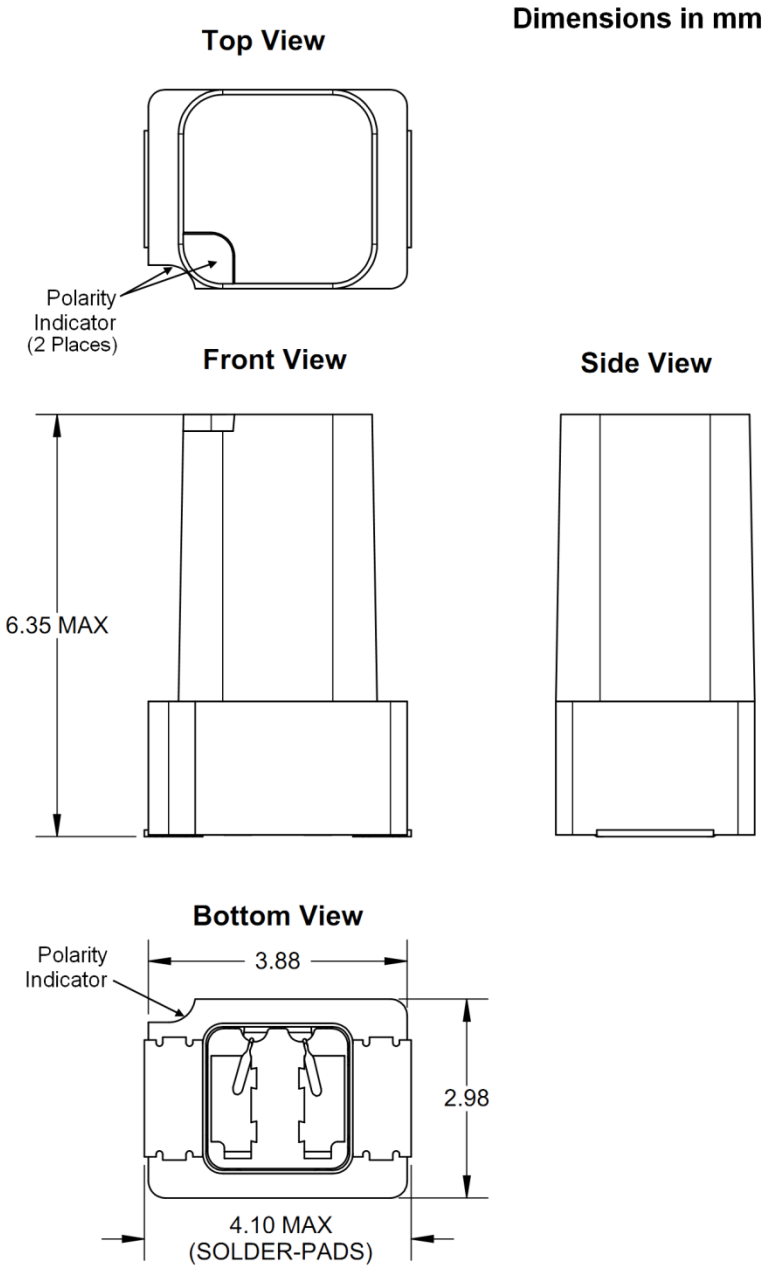

Figure 3-4: Sen-Z-f Sensor Dimensions

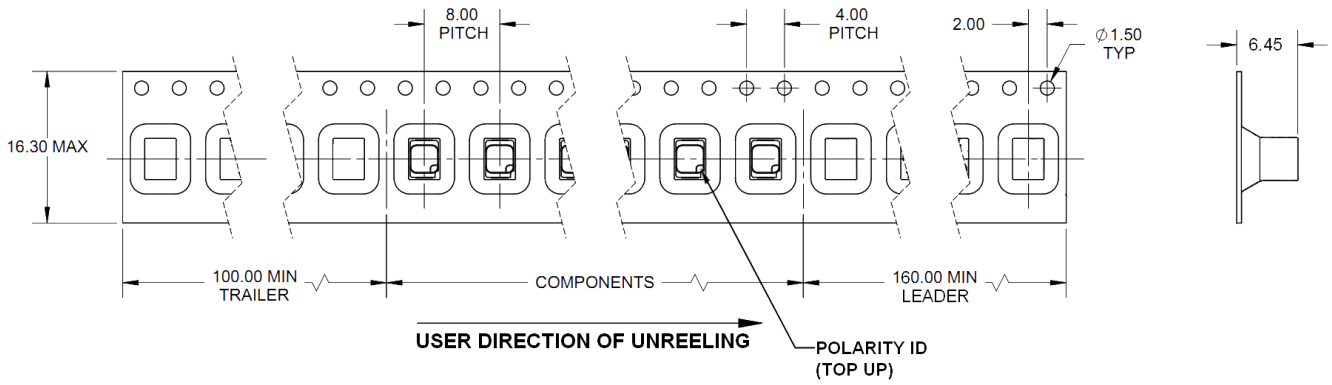

Dimensions in mm
Full reel is 1200 pcs. Smaller quantities on cut tape.
Tape & reel meets ANSI/EIA standard EIA-418-B

Figure 3-5: Sen-Z-f Tape and Reel Dimensions

Dimensions in mm

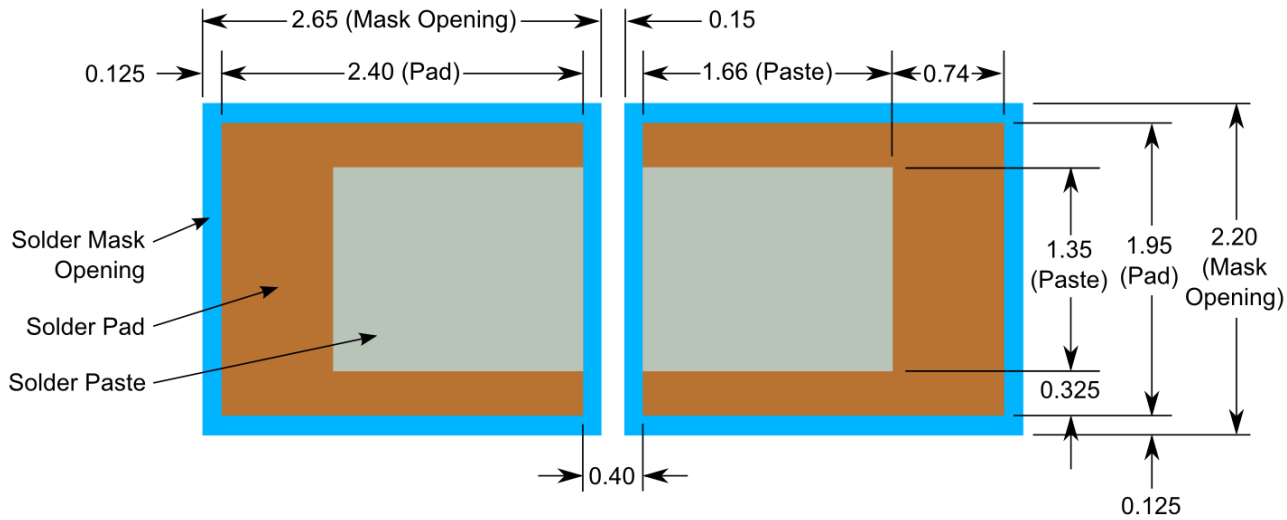

Note: *PNI recommends a 5 mil stencil. The solder paste area is much smaller than the pad to reduce sensor tilt and misalignment. The above layout allows for rework: for minimal footprint, contact PNI.*

Figure 3-6: Sen-Z-f Recommended Solder Pad, Paste, & Mask Layout

3.4.3 MagI2C

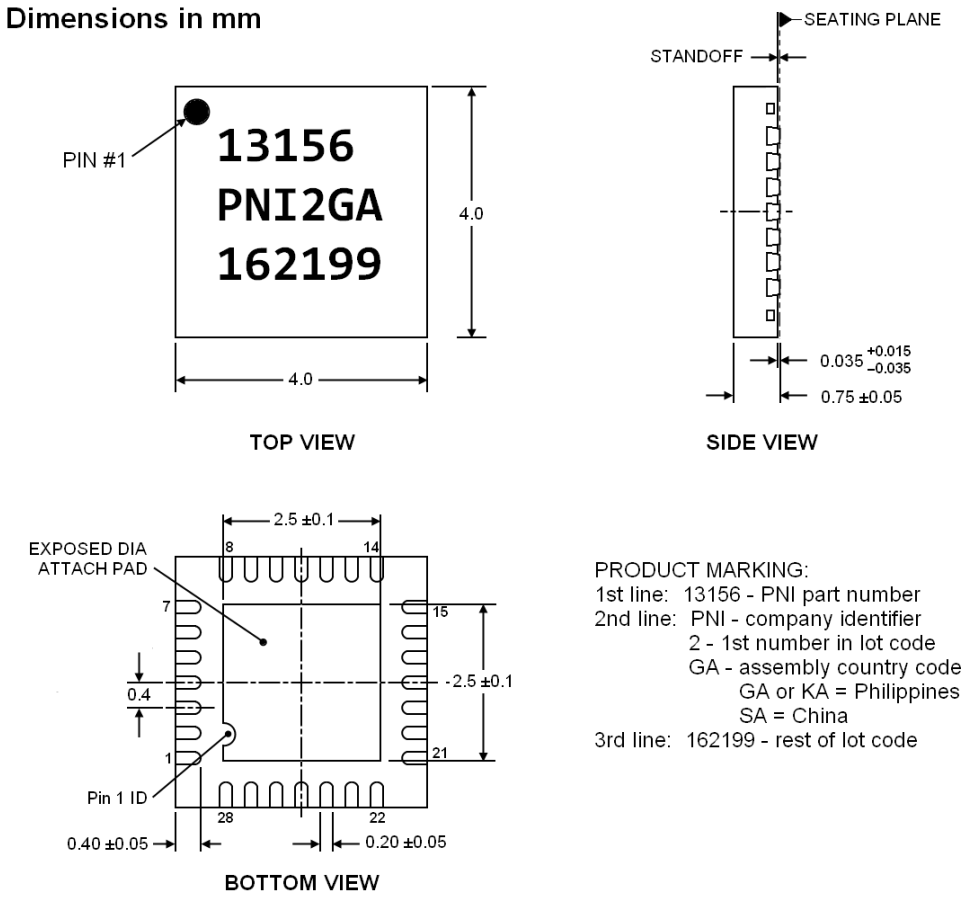

Figure 3-7: MagI2C MLF Mechanical Drawing

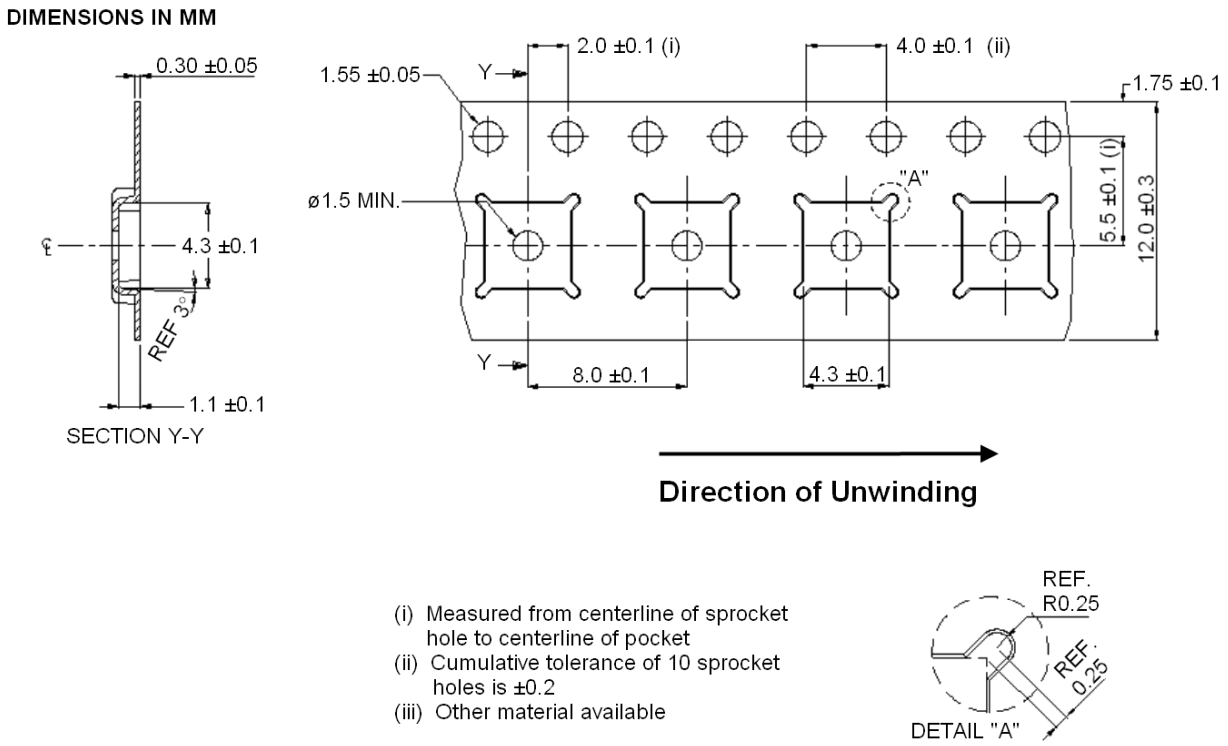

Dimensions: mm
Full reel is 5000 pcs. Smaller quantities on cut-tape.
Tape & Reel meets ANSI/EIA standard EIA-418

Figure 3-8: MagI2C MLF Tape Dimensions

3.5 Soldering

Figure 3-9 and Table 3-6 provide the recommended solder reflow profile and processing parameters for RM3100 components. After soldering PNI components to a board, it is possible to wave solder the opposite side of the PCB.

IMPORTANT: PNI sensor coils require the use of halide-free solder pastes and processes for reflow and cleaning. Contact PNI if you would like recommendations.

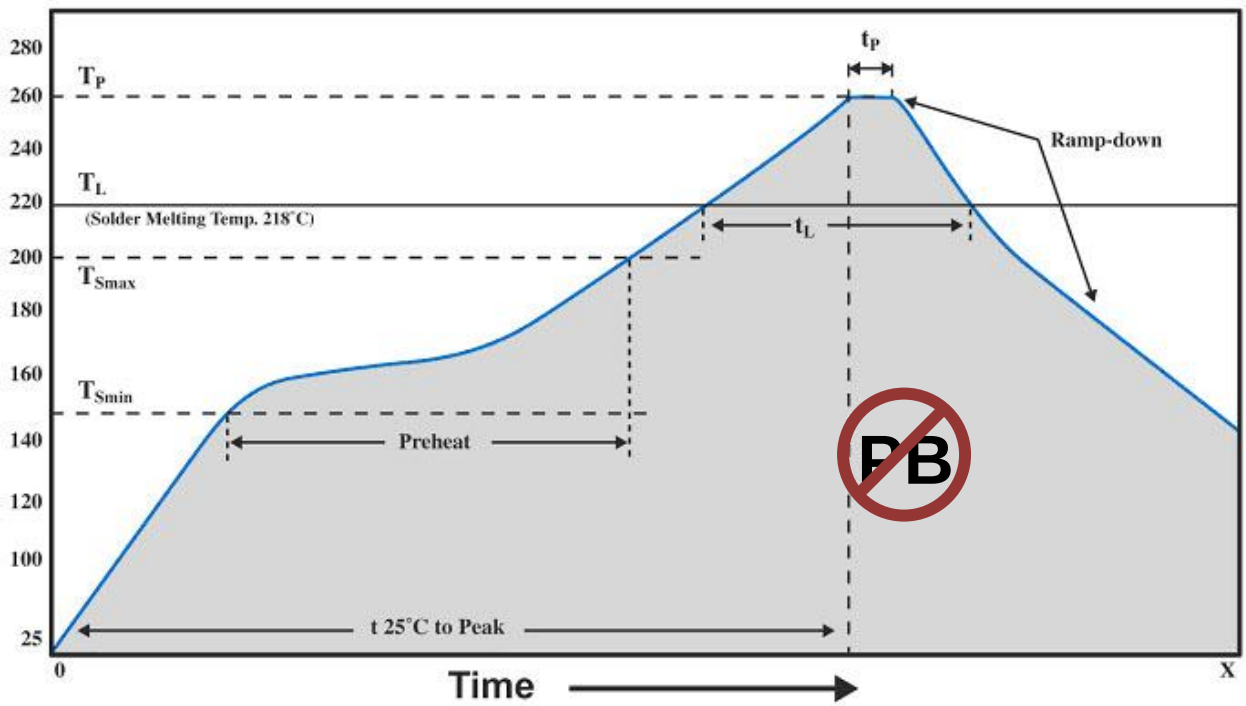

Figure 3-9: Recommended Solder Reflow Profile

Table 3-6: Recommended Solder Processing Parameters[1]

Parameter	Symbol	Value
Preheat Temperature, Minimum	T_{Smin}	150°C
Preheat Temperature, Maximum	T_{Smax}	200°C
Preheat Time (T_{Smin} to T_{Smax})		60 – 180 seconds
Solder Melt Temperature	T_L	>218°C
Ramp-Up Rate (T_{Smax} to T_L)		3°C/second maximum
Peak Temperature	T_P	<260°C
Time from 25°C to Peak (T_P)		6 minutes maximum
Time above T_L	t_L	60 – 120 seconds
Soak Time (within 5°C of T_P)	t_P	10 – 20 seconds
Rampdown Rate		4°C/second maximum

Footnote:

1. Meets IPC/JEDEC J-STD-020 profile recommendations. Sen-XY-f and Sen-Z-f classified as moisture sensitivity level 1. MagI2C MLF classified as moisture sensitivity level 3.

4 Geomagnetic Sensor Overview & Set-Up

4.1 Overview

Figure 4-1 and Figure 4-2 provide basic schematics for implementing the RM3100 Sensor Suite when using the SPI interface and I^2C interface, respectively. The MagI2C is at the center of the schematic, as it ties the user's host controller, on the left, to the three sensor coils, on the right. Unused sensor connections should remain floating.

Note: *RM3100 and RM2100 Geomagnetic Sensors typically are used in compassing applications, where each channel represents a Cartesian coordinate axis, X, Y, or Z. For this reason, the term "axis" generally is used instead of "channel".*

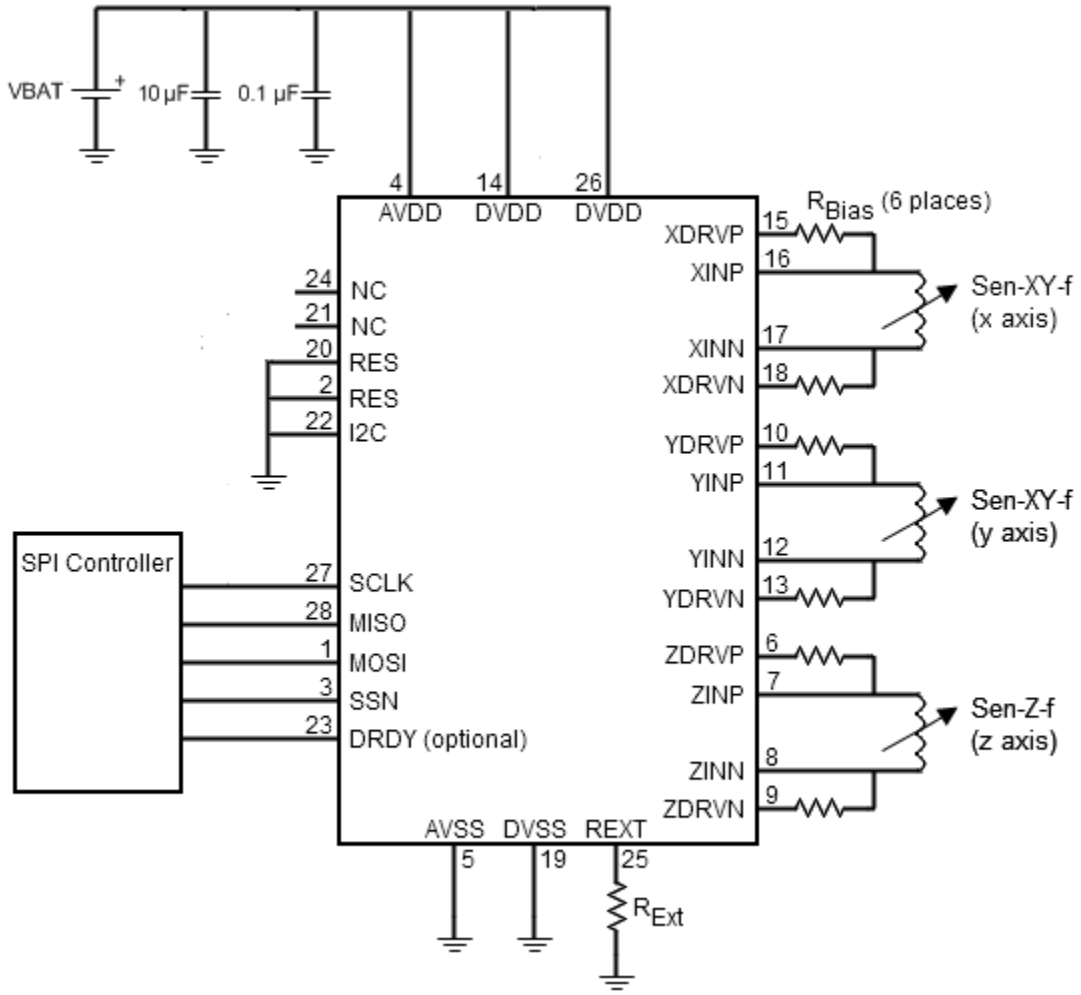

Figure 4-1: RM3100 reference schematic – SPI Configuration

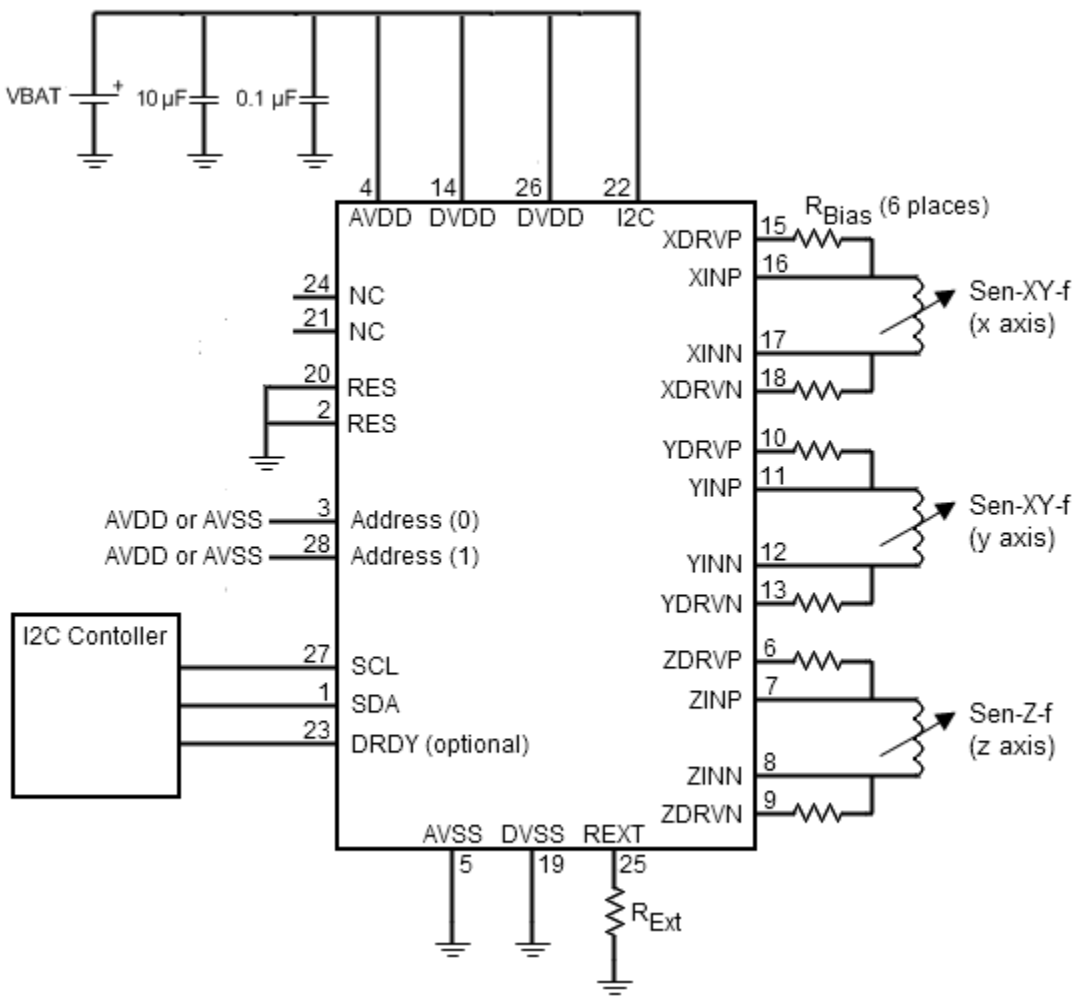

Figure 4-2: RM3100 reference schematic – I^2C Configuration

A Sen-XY-f or Sen-Z-f sensor coil serves as the inductive element in a simple LR relaxation oscillation circuit which is composed of an external bias resistor along with digital gates and a comparator internal to the MagI2C. The coil's inductance is a function of the magnetic field strength. As such, the frequency of oscillation of the circuit varies with the strength of the total magnetic field parallel to the sensor. To make a measurement, one side of the coil is grounded while the other side is alternately driven with positive and negative current through the oscillator. The circuit is driven for a set number of circuit oscillations, and the time to complete the oscillations is measured using the MagI2C's internal high-speed clock. The MagI2C next switches the bias connection to the coil and makes another measurement. The side that was previously grounded is now charged and discharged while the other is now grounded.

Because:

- the total magnetic field represents the sum of the local field and the circuit-induced field, and
- the circuit-induced magnetic field has the same magnitude but opposite direction for the two bias polarities,

the local magnetic field is proportional to the difference in the time to complete the measurement for each bias. The difference in the number of clock oscillations between the forward and reverse bias directions is output from the MagI2C, and this number is directly proportional to the strength of the local magnetic field in the direction of the sensor.

Figure 4-3 provides a detail of the biasing circuit. For more on PNI's magneto-inductive technology, refer to the "Magneto-Inductive Technology Overview" white paper found on PNI's website.

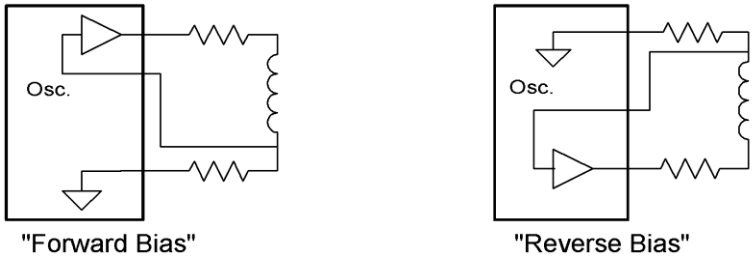

Figure 4-3: LR Oscillator Circuit Biasing Diagram

Since PNI's Geomagnetic Sensor Suite works in the frequency domain, resolution is cleanly established by the number of circuit oscillations. Also, the output from the MagI2C is inherently digital and can be fed directly into a microprocessor, which eliminates the need for signal conditioning or an analog/digital interface between the sensor and host processor.

4.2 Layout

4.2.1 Sensor Coil Orientation

Figure 4-4 indicates how the three sensor coils in a RM3100 Geomagnetic Sensor should be oriented for a system referenced as north-east-down (NED). The arrow represents the direction of travel or pointing. The Sen-XY-f is insensitive to the location of the polarity indicator, while the location of the polarity indicator is critical for the Sen-Z-f.

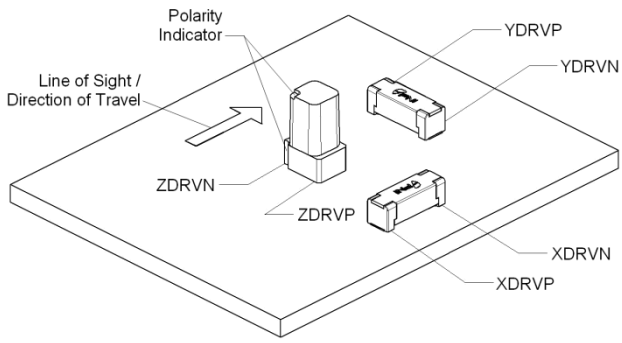

Figure 4-4: RM3100 North-East-Down (NED) Sensor Layout

If the Sen-Z-f sensor coil is flipped to the bottom of the board such that the polarity indicator still points back or the curved portion of the sensor still points forward, then to retain NED the Sen-Z-f's ZDRVN and ZDRVP pads should be as shown above, except on the bottom of the board. As the pads on the Sen-Z-f have switched positions, the connections to the Sen-Z-f sensor will be reversed.

4.2.2 Local Magnetic Field Considerations

Because the RM3100 sensor measure magnetic field, it is important to consider what items in the vicinity of the sensors can affect the sensor readings. Note that magnetic field drops off as $(1/\text{distance})^3$. Specific issues to consider include:

- The sensors have a specified linear regime of ±200 μT. (Earth's field is ~50 μT.) To ensure the sensors operate in their linear regime, do not place the sensors close to large electric currents, large masses of ferrous material, or devices incorporating permanent magnets, such as speakers and electric motors.
- Locate the sensor coils away from changing magnetic fields. If this is not possible, but the local magnetic field is known to have multiple states, try to take readings only when the field is in a known state. For instance, if a motor runs part of the time, take readings only when the motor is in a known state.
- If you are uncertain about the effect a specific component may have on the system, the RM3100 Evaluation Board can be used to help ascertain this. Place the RM3100 Evaluation Board on a firm surface and gradually bring the component in question close to the board, then note when the magnetic field starts to change. If the component cannot be moved, then gradually move the RM3100 Evaluation Board towards the component, carefully ensuring the orientation of the board remains constant while doing this.

- If an RM3100 Evaluation Board is not available, gradually bring the component in question closer to one of the sensor coils and observe when the sensor reading from the MagI2C starts to change.

4.2.3 Other Layout Considerations

Other design considerations include:

- To minimize the effect of gradients in the magnetic field, position the sensor coils as close to each other as possible.
- To reduce coupling to and from other signals, keep the two traces from the MagI2C to each sensor coil as close as possible to each other. PNI recommends locating the MagI2C within 10 cm from the sensor coils.
- Keep capacitors, especially tantalum capacitors, far away from the sensor coils.

4.3 MagI2C Pin-Out

The MagI2C's pin-out is summarized on the following page in Table 4-1. Pin numbers run counterclockwise, when looking from the top, starting at the Pin 1 designator as shown in Figure 3-7.

4.3.1 General Pins

AVDD and DVDD (pins 4, 14, & 26)

AVDD and DVDD should be tied to the analog and digital supply voltages, respectively. The recommend voltages are defined in Table 3-5, and the maximum voltages are given in Table 3-4. DVDD must be on whenever AVDD is on, so DVDD should either be brought up first or at precisely the same time as AVDD. AVDD can be turned off when not making a measurement to conserve power, since all other operations are supported with DVDD. Under this condition, register values will be retained as long as DVDD is powered. Also, AVDD must be within 0.1 V of DVDD when AVDD is on.

AVSS and DVSS (pins 5 & 19)

AVSS and DVSS should be tied to the analog and digital ground, respectively. Assuming the ground plane is clean, they may share a common ground. Alternatively, they may have their own ground planes if this is more convenient. DVSS and AVSS should be within 0.1 V of each other.

Table 4-1: MagI2C Pin Assignments

Pin#	Pin Name	Description
1	MOSI / SDA	SPI interface (MOSI) – Master Output, Slave Input Serial Data I^2C interface (SDA) – Serial Data Line
2	RES	Reserved – connect to ground
3	SSN / SA0	SPI interface – Active low to select port I^2C interface – Bit 0 of MagI2C's slave address
4	AV_{DD}	Supply voltage for analog section of ASIC
5	AV_{SS}	Ground pin for analog section of ASIC
6	Z_{DRVP}	Z sensor drive output
7	Z_{INP}	Z sensor measurement input
8	Z_{INN}	Z sensor measurement input
9	Z_{DRVN}	Z sensor drive output
10	Y_{DRVP}	Y sensor drive output
11	Y_{INP}	Y sensor measurement input
12	Y_{INN}	Y sensor measurement input
13	Y_{DRVN}	Y sensor drive output
14	DV_{DD}	Supply voltage for digital section of ASIC.
15	X_{DRVP}	X sensor drive output
16	X_{INP}	X sensor measurement input
17	X_{INN}	X sensor measurement input
18	X_{DRVN}	X sensor drive output
19	DV_{SS}	Ground pin for digital section of ASIC
20	RES	Reserved – connect to ground
21	NC	Do not connect
22	I2CEN	I^2C enable pin (HIGH = I^2C, LOW = SPI)
23	DRDY	Status line
24	NC	Do not connect
25	R_{EXT}	External timing resistor for high speed clock.
26	DV_{DD}	Supply voltage for digital section of ASIC.
27	SCLK / SCL	SPI interface (SCLK) – Serial clock input I^2C interface (SCL) – Serial clock line
28	MISO / SA1	SPI interface (MISO) – Master Input, Slave Output I^2C interface – Bit 1 of MagI2C's slave address

Sensor Drive and Measurement Pins (pins 6 – 13 & 15 – 18)

The various sensor drive and measurement pins should be connected to the sensor coils. For a north-east-down (NED) reference frame, the connections should be as defined in Figure 4-4.

I2CEN (pin 22)

This pin should be pulled LOW when using the SPI interface or pulled HIGH when using the I^2C interface.

DRDY (pin 23)

DRDY is used to ensure data is read from the MagI2C only when it is available. The DRDY pin will go HIGH when the measurement is complete. This signals the host that data is ready to be read. The DRDY pin automatically is set LOW when the Measurement Result registers are read or a write operation is performed.

It is not mandatory to use the DRDY pin, as alternative methods exist to determine if data is available. Specifically, the STATUS register provides this information. And, if using the SPI interface where CPHA=CPOL=1, the MISO line also indicates if data is available when SSN is LOW.

R_{EXT} (pin 25)

R_{EXT} ties to the external timing resistor for the high-speed clock. The recommended value for the resistor and associated clock speed are defined in Table 3-1.

4.3.2 SPI Pins

MOSI (pin 1)

MOSI is an SPI input that provides data from the master device to the MagI2C. Data is transferred most significant bit first. Data must be presented at least 50 ns before the rising edge of SCLK, and remain valid for 50 ns after the edge. New data typically is presented to the MOSI pin on the falling edge of SCLK.

SSN (pin 3)

This signal sets the MagI2C as the operating slave device on the SPI bus. The SSN pin must be LOW prior to data transfer in either direction, and must stay LOW during the entire transfer.

The SSN pin must transition from HIGH to LOW prior to reading from or writing to the registers. It must stay LOW for the remainder of the operation.

After communication between the MagI2C and master device is finished, the SPI bus can be freed up (SSN pin set HIGH) to communicate with other slave devices while the MagI2C takes a measurement or is idle.

SCLK (pin 27)

SCLK is a SPI input used to synchronize the data sent in and out through the MISO and MOSI pins. SCLK is generated by the customer-supplied master device and should be 1 MHz or less. One byte of data is exchanged over eight clock cycles. Data is captured by the master device on the rising edge of SCLK. Data is shifted out and presented to the MagI2C on the MOSI pin on the falling edge of SCLK, except for the first bit (MSB) which must be present before the first rising edge of SCLK.

MISO (pin 28)

MISO is an SPI output that sends data from the MagI2C to the master device. Data is transferred most significant bit first and is captured by the master device on the rising edge of SCLK. The MISO pin is placed in a high impedance state if the MagI2C is not selected (i.e. if SSN=1).

4.3.3 I^2C Pins

SDA (pin 1)

The SDA line is a bi-directional line used to send commands to the MagI2C and used to transmit data from the MagI2C. Data is transferred most significant bit first. All communication between the host and the MagI2C occurs on this line when implementing the I2C interface.

SA1 (pin 3)

SA1 represents the second-least significant bit in the MagI2C's slave address. Pulling this HIGH represents a '1' and pulling it low represents a '0'. Along with pin 28 (bit 0) and the higher 5 bits (0b01000), which are pre-defined in hardware, SA1 establishes the 7-bit slave address of the MagI2C on the I^2C bus.

SCL (pin 27)

SCL is used to synchronize the data sent in and out through the SDA pin. SCL is generated by the customer-supplied master device and should be 1 MHz or less. Data is captured by the master device on the rising edge of SCL. Data is shifted out and presented to the MagI2C on the SDA pin on the falling edge of SCL, except for the first bit which must be present before the first rising edge of SCL.

SA0 (pin 28)

SA0 represents the least significant bit in the MagI2C's slave address. Pulling this HIGH represents a '1' and pulling it low represents a '0'. Along with pin 3 (bit 1) and the higher 5 bits (0b01000), which are pre-defined in hardware, SA0 establishes the 7-bit slave address of the MagI2C on the I^2C bus.

4.4 SPI Timing Requirements

The MagI2C can act as a slave device on a SPI bus. The SPI interface consists of four signals, as carried on SCLK, MOSI, MISO, and SSN. The SPI clock, SCLK, should run at 1 MHz or less. Data sent out on MOSI is considered valid while SCLK is HIGH, and data is in transition when SCLK is LOW. The first byte sent to the MagI2C contains the Read/Write bit (Write=0) followed by the 7-bit register address. When the register address byte is received the MagI2C returns the STATUS register contents. Assuming SSN stays low and SCLK continues, multiple registers can be written to or read from as the MagI2C will automatically increment to the next register address. The clock polarity when the bus is idle can either be LOW (CPOL=CPHA=0) or HIGH (CPOL=CPHA=1).

As long as SSN is LOW data can transfer to or from the MagI2C. Generally it is a good idea to pull SSN to HIGH after a read or write operation has completed such that the SPI bus can be freed up for other devices. The MagI2C can perform measurements while the SSN line is HIGH, as this does not involve communication with the master. Pulling the SSN to HIGH during a data read or write will terminate the transaction.

The timing parameters, defined in Figure 4-5 or Figure 4-6 and specified in Table 4-2, must be met to ensure reliable communication.

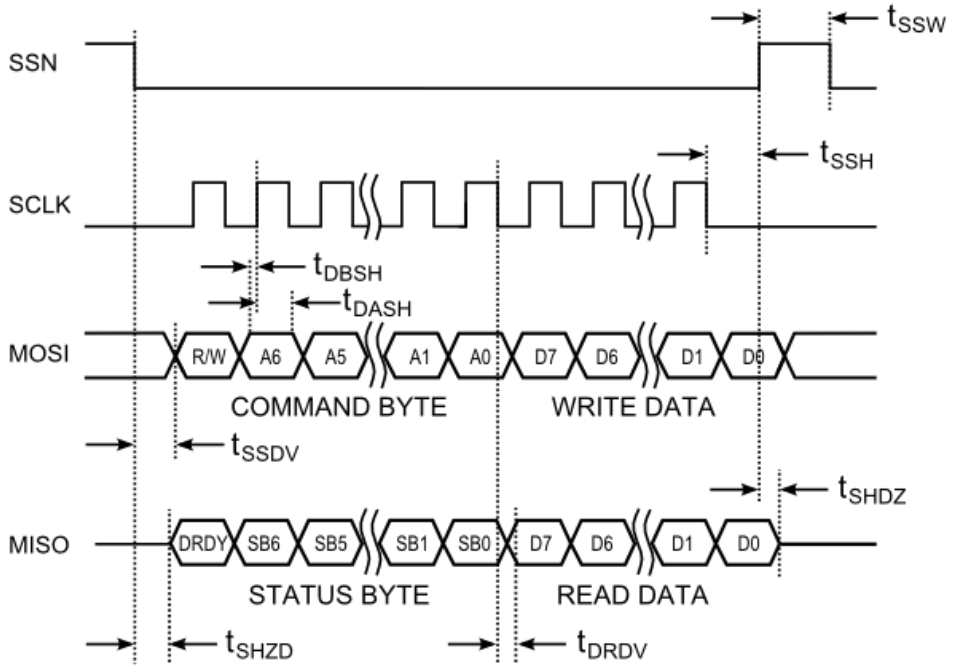

Figure 4-5: SPI Timing Diagram, CPOL = CPHA = 0

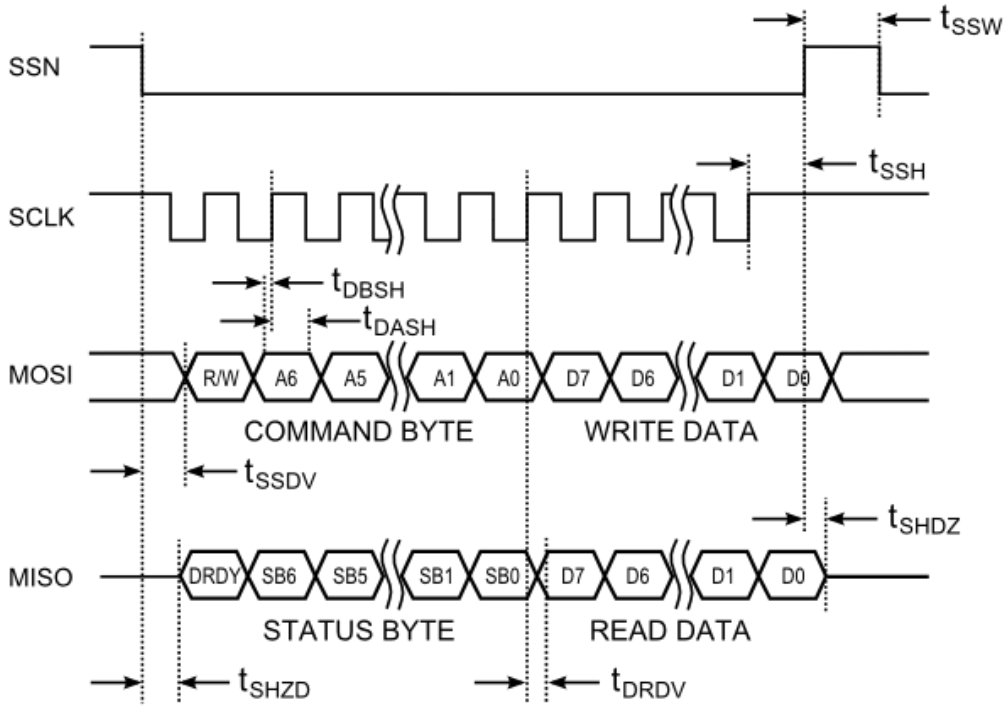

Figure 4-6: SPI Timing Diagram, CPOL = CPHA = 1

Table 4-2: SPI Timing Specifications

Symbol	Description	Min	Max	Units
t_{SHZD}	SSN LOW to data output		100	ns
t_{SSDV}	SSN LOW to Command Byte	100		ns
t_{DBSH}	Setup data before active edge	50		ns
t_{DASH}	Hold data after active edge	50		ns
t_{DRDV}	Clock falling edge to valid data		10	ns
t_{SSH}	Final clock cycle falling edge to SSN HIGH	100		ns
t_{SHDZ}	SSN HIGH to output data tri-state		100	ns
t_{SSW}	SSN HIGH to LOW (time between transactions)	100		

4.5 I²C Requirements

The MagI2C can operate as a slave device on an I²C bus. It is identified by a 7-bit slave address. The higher 5 bits of the slave address are pre-defined in hardware and the same for all MagI2C devices. PNI has registered these first 5 bits as 0b01000. The lower 2 bits of the slave address are user-configurable, using pins 3 and 28. As such, 4 different slave addresses are possible. For example, setting pin 3 HIGH and pin 28 LOW results in an address of 0b0100001.

The MagI2C's I²C interface complies with NXP's UM10204 specification and user manual, revision 03. Standard, fast, fast plus, and high speed modes of the I²C protocol are supported. Below is a link to this document.

http://www.nxp.com/documents/user_manual/UM10204.pdf

4.5.1 I²C Register Write

A generic Write transaction is given below.

START	MagI2C ADDRESS							RW	ACK	MagI2C REG. ADDRESS (N)								ACK	DATA TO REGISTER (N)								ACK	DATA TO REGISTER (N+1)								ACK	STOP
S	A6	A5	A4	A3	A2	A1	A0	0	0	A7	A6	A5	A4	A3	A2	A1	A0	0	A7	A6	A5	A4	A3	A2	A1	A0	0	A7	A6	A5	A4	A3	A2	A1	A0	0	P

From Host to MagI2C

From MagI2C to Host

---------- Data Transferred (n bytes + acknowledge) ----------

All communication is on the SDA line. The transaction is initiated by the host, or master, sending the Start condition followed by the MagI2C's slave address, and then the RW bit is set to '0', indicating a Write operation. The slave address is acknowledged by the MagI2C by setting SDA to LOW. This is followed by the desired 7-bit register address and then the register data. The register value automatically increments after every received data byte. The transaction is terminated by the host sending the Stop condition.

The MagI2C will always acknowledge the start of an I^2C Write transaction by sending a '0' (i.e. the ACK signal). But if the Write command cannot be executed for some reason the MagI2C will send a '1' instead (i.e. the NACK signal). The reasons a NACK signal might be sent are established by the HSHAKE register, and include writing to an undefined register or writing to the POLL register while CMM is in progress, or vice versa. See Section 5.6.2 for more information.

4.5.2 I^2C Register Read

To perform a Read transaction, it is first necessary for the master to Write the desired register address, and then to Read the register data. A generic transaction is given below.

START	SLAVE ADDRESS							RW	ACK	REGISTER ADDRESS (N)								ACK	STOP
S	A6	A5	A4	A3	A2	A1	A0	0	0	A7	A6	A5	A4	A3	A2	A1	A0	0	P

From Host to MagI2C

From MagI2C to Host

START	SLAVE ADDRESS							RW	ACK	DATA FROM REG. (N)								ACK	DATA FROM REG. (N+1)								NACK	STOP
S	A6	A5	A4	A3	A2	A1	A0	1	0	A7	A6	A5	A4	A3	A2	A1	A0	0	A7	A6	A5	A4	A3	A2	A1	A0	1	P

---------- Data Transferred (n bytes + acknowledge) ----------

The Write sequence is described in the prior section, except for this case there is no data to send. For the Read sequence the host again sends the MagI2C's slave address, but this time sets the RW bit is set to '1'. The MagI2C acknowledges that it is has been addressed and then sends data from the register address that was previously sent. The host acknowledges receipt of the data, and then the MagI2C increments the register address and sends data from this register. This continues until the host sends the NACK command followed by the Stop command, which terminates the transaction.

5 MagI2C Operation

The primary functions of the MagI2C are:

- Set the Cycle Count Registers if the default is not desired.
- Initiate either a Single Measurement or Continuous Measurement.
- Confirm New Data Ready.
- Read the Measurement Results Registers.

Each of these steps is discussed in detail in the following sections.

Note: *The MagI2C incorporates an Idle Mode to reduce power consumption. The device automatically idles when not exchanging data or taking a measurement. The MagI2C starts in Idle Mode at power-up.*

The MagI2C's register map is given in Table 5-1. Register addresses are 7 bits. To Write to a register, a '0' followed by the 7-bit register number should be sent, followed by the register value. ***To Read from a register, a '1' followed by the 7-bit register number should be sent, effectively adding 0x80 to the register number.***

Table 5-1: MagI2C Register Map

Name	Register # (Hex)	R/W	Default (Hex)	Payload Format	Description
POLL	00	RW	00	[7:0]	Polls for a Single Measurement
CMM	01	RW	00	[7:0]	Initiates Continuous Measurement Mode
CCX	04 – 05	RW	00C8	UInt16	Cycle Count Register – X Axis
CCY	06 – 07	RW	00C8	UInt16	Cycle Count Register – Y Axis
CCZ	08 – 09	RW	00C8	Uint16	Cycle Count Register – Z Axis
TMRC	0B	RW	96	[7:0]	Sets Continuous Measurement Mode Data Rate
ALLX	0C – 0E	RW	000000	Uint24	Alarm Lower Limit – X Axis
AULX	0F – 11	RW	000000	Uint24	Alarm Upper Limit – X Axis
ALLY	12 – 14	RW	000000	Uint24	Alarm Lower Limit – Y Axis
AULY	15 – 17	RW	000000	Uint24	Alarm Upper Limit – Y Axis
ALLZ	18 – 1A	RW	000000	Uint24	Alarm Lower Limit – Z Axis
AULZ	1B – 1D	RW	000000	Uint24	Alarm Upper Limit – Z Axis
ADLX	1E – 1F	RW	0000	UInt16	Alarm Hysteresis Value – X Axis
ADLY	20 – 21	RW	0000	UInt16	Alarm Hysteresis Value – Y Axis
ADLZ	22 – 23	RW	0000	UInt16	Alarm Hysteresis Value – Z Axis
MX	24 – 26	R	000000	Uint24	Measurement Results – X Axis
MY	27 – 29	R	000000	Uint24	Measurement Results – Y Axis
MZ	2A – 2C	R	000000	Uint24	Measurement Results – Z Axis
BIST	33	RW	00	[7:0]	Built-In Self Test
STATUS	34	R	00	[7:0]	Status of DRDY
HSHAKE	35	RW	1B	[7:0]	Handshake Register
REVID	36	R	--	Unit8	MagI2C Revision Identification

5.1 Set the Cycle Count Registers (0x04 – 0x09)

The Cycle Count Registers establish the number of sensor oscillation cycles (cycle counts) that will be counted for each sensor in both the forward and reverse bias directions during a measurement sequence. Each sensor has its own cycle count value, and each can be different. Increasing the cycle count value increases measurement gain and resolution. Lowering the cycle count value reduces acquisition time, which increases maximum achievable sample rate or, with a fixed sample rate, decreases power consumption. The Cycle Count read and write addresses, plus their default values, are given in Table 5-2

Table 5-2: Cycle Count Registers

Register Description	Default Value (Hex)	Write Address (Hex)	Read Address (Hex)
X Axis Cycle Count Value - MSB	0x00	04	84
X Axis Cycle Count Value - LSB	0xC8	05	85
Y Axis Cycle Count Value - MSB	0x00	06	86
Y Axis Cycle Count Value - LSB	0xC8	07	87
Z Axis Cycle Count Value - MSB	0x00	08	88
Z Axis Cycle Count Value - LSB	0xC8	09	89

Since the registers are adjacent, it is not necessary to send multiple register addresses, as the MagI2C automatically will read/write to the next adjacent register.

The default values for the Cycle Count Registers are 0xC8 in the LSB and 0x0 in the MSB, or 200_D. This default value provides a good trade-off between acquisition time and resolution, but favors resolution. If the user is more interested in low power consumption or running at high data rates, a lower cycle count value of (ex. 50_D or 100_D) would be more appropriate. To estimate the appropriate cycle count value for your application review the specifications given at 50, 100, and 200 cycle counts in Table 3-1. Note that these 3 cycle counts by no means represent all the cycle count options, as the minimum value is ‘0’ and the maximum is 65,536. Having said this, quantization issues generally dictate working above a cycle count value of ~30, while noise limits the useful upper range to ~400 cycle counts.

Assuming a non-default cycle count value is desired, then prior to sending a command to take a sensor measurement it is necessary to Write values to the Cycle Count Registers. Once the Cycle Count Registers are set, they do not need to be repopulated unless the user wants to change the values or the system is powered down, in which case the default value repopulates the register fields when powered up again.

5.2 Initiate Continuous Measurement Mode (0x01)

The MagI2C can either take measurements automatically on a regular frequency (Continuous Measurement Mode) or by polling for single measurement. This section discusses Continuous Measurement Mode. See Section 5.3 for polling a single measurement.

To initiate Continuous Measurement Mode, write to the CMM register address, 0x01, followed by the CMM register contents. To set the rate of data acquisition in Continuous Measurement Mode, see Section 5.2.1. Below are the contents of the CMM register.

Bit #	7	6	5	4	3	2	1	0
Value	LDM	CMZ	CMY	CMX	DRDM1	DRDM0	ALARM	START

Where:

- START – A “1” in this bit position initiates Continuous Measurement Mode. To turn off Continuous Measurement Mode it is necessary to write a “0” to this bit position. Note that writing to POLL (i.e. initiating a single measurement command) while operating in Continuous Measurement Mode results in the single measurement command being ignored.
- ALARM – A feature of the MagI2C while operating in Continuous Measurement Mode is the ALARM bit will go HIGH if a measurement reading is outside a predefined range of values, set by the Alarm Upper and Lower Limit Registers. This bit is set to ‘1’ if a limit is exceeded. The ALARM bit is reset by writing a ‘0’ to this bit. See Section 5.2.2 for additional information.
- DRDM – These two bits establish the required condition to trigger the DRDY pin to HIGH. There are 4 possible conditions, as set out in Table 5-3.

Table 5-3: Continuous Mode DRDY Options

DRDY Requirements	DRDM1	DRDM0
DRDY to HIGH when ALARM = 1, AND a full measurement sequence is completed, as established by CMX, CMY, and CMZ.	0	0
DRDY to HIGH after the completion of a measurement on any axis.	0	1
DRDY to HIGH after a full measurement sequence is completed, as established by CMX, CMY, and CMZ.	1	0
DRDY to HIGH when Alarm = 1.	1	1

- CMX, CMY, CMZ – A "1" in either of these three bit positions indicates a measurement will be taken on that sensor axis when operating in Continuous Measurement Mode. For instance, to take measurements on all three axis, CMX = CMY = CMZ = 1.
- LDM – This bit indicates whether Absolute or Relative Alarm Mode is being implemented. A "0" indicates Absolute Alarm Mode, while a "1" indicates Relative Alarm Mode. See Section 5.2.2 for additional information.

To read from the CMM register, send 0x81. The return byte will provide the same information as above, specifically indicating if ALARM is HIGH.

Note: *Certain commands, such as reading from the CMM register or writing to the TMRC register, will terminate Continuous Measurement Mode.*

5.2.1 Setting the CMM Update Rate with TMRC (0x0B)

The time between measurements in Continuous Measurement Mode is established with the TMRC register. The TMRC register is defined below.

Bit #	7	6	5	4	3	2	1	0
Value	1	0	0	1	TMRC3	TMRC2	TMRC1	TMRC0

The LSB is used set the CMM updatee rate. The MSB should be 0x9, as indicated above. The larger the TMRC value, the longer the interval between measurements. Available data rates are given in Table 5-4. Note that the update rates are approximate, and have a one standard deviation tolerance of about ~7%. The default value for TMRC is 0x96, establishing a data update rate of ~37 Hz.

To set the TMRC register, send the register address, 0x0B, followed by the desired TMRC register value. To read the TMRC register, send 0x8B.

Note: *The Cycle Count Registers establish the maximum data rate of the sensors. For instance, if the cycle count is set to 200_D, then the maximum 3-axis update rate is ~430 Hz. If TMRC is set to 0x92, indicating an update rate of ~600 Hz, the rate established by the cycle count will override the TMRC request, and the actual update rate will be ~430 Hz.*

Table 5-4: CMM Update Rates

TMRC Value (Hex)	Time Between Readings	Update Rate
92	~1.7 ms	~600 Hz
93	~3 ms	~300 Hz
94	~7 ms	~150 Hz
95	~13 ms	~75 Hz
96	~27 ms	~37 Hz
97	~55 ms	~18 Hz
98	~110 ms	~9 Hz
99	~220 ms	~4.5 Hz
9A	~440 ms	~2.3 Hz
9B	~0.8 s	~1.2 Hz
9C	~1.6 s	~0.6 Hz
9D	~3.3 s	~0.3 Hz
9E	~6.7 s	~0.015 Hz
9F	~13 s	~0.075 Hz

5.2.2 Alarm Mode

The MagI2C incorporates an Alarm Mode feature that sets the ALARM bit to “1” in the CMM register whenever measurement results exceed an established limit. This feature can be particularly useful for applications where the user’s device is briefly waking up to take a magnetic field measurement reading and trying to determine if the field has changed in an appreciable manner.

This is an optional feature and does not need to be implemented. To disable the feature, the Alarm Lower Limit and Alarm Upper Limit register values should be `“0”, which are the defaults.

There are two types of limits, Absolute and Relative. The LDM bit in the CMM register establishes which type will be used, where "0" indicates Absolute and "1" indicates Relative. In Absolute Alarm Mode, the limits are fixed and do not change, while in Relative Alarm Mode the limits change whenever the current Alarm Limits are exceeded. As the name suggests, Absolute Alarm Mode is used for monitoring the absolute magnetic field, while Relative Alarm Mode is used to monitor changes in magnetic field.

Absolute Alarm Mode

In Absolute Alarm Mode the limits are set for each axis by the Alarm Lower Limit and Alarm Upper Limit registers, as given in Table 5-5. The register values are unsigned integers. The ALARM bit will go HIGH if the measured value (MX, MY, or MZ) on any given axis is either greater than the Alarm Upper Limit for that axis or less than the Alarm Lower Limit for that axis. This is an "OR" function, looking at both the Alarm Upper and Lower Limits, and looking at all sensors being measured.

Table 5-5: Alarm Lower and Upper Limit Registers

Register Description	Register Name	Read (Hex)	Write (Hex)
X Axis Alarm Lower Limit - MSB	ALLX2	8C	0C
X Axis Alarm Lower Limit - mid	ALLX1	8D	0D
X Axis Alarm Lower Limit - LSB	ALLX0	8E	0E
X Axis Alarm Upper Limit - MSB	AULX2	8F	0F
X Axis Alarm Upper Limit - mid	AULX1	90	10
X Axis Alarm Upper Limit - LSB	AULX0	91	11
Y Axis Alarm Lower Limit - MSB	ALLY2	92	12
Y Axis Alarm Lower Limit - mid	ALLY1	93	13
Y Axis Alarm Lower Limit - LSB	ALLY0	94	14
Y Axis Alarm Upper Limit - MSB	AULY2	95	15
Y Axis Alarm Upper Limit - mid	AULY1	96	16
Y Axis Alarm Upper Limit - LSB	AULY0	97	17
Z Axis Alarm Lower Limit - MSB	ALLZ2	98	18
Z Axis Alarm Lower Limit - mid	ALLZ1	99	19
Z Axis Alarm Lower Limit - LSB	ALLZ0	9A	1A
Z Axis Alarm Upper Limit - MSB	AULZ2	9B	1B
Z Axis Alarm Upper Limit - mid	AULZ1	9C	1C
Z Axis Alarm Upper Limit - LSB	AULZ0	9D	1D

Since the registers are adjacent, it is not necessary to send multiple register addresses, as the MagI2C automatically will read/write to the next adjacent register.

Relative Alarm Mode

In Relative Alarm Mode the limits for each axis initially are set by the Alarm Lower Limit and Alarm Upper Limit value registers, as given in Table 5-5, similar to Absolute Alarm Mode. However, when the ALARM bit is triggered and set HIGH, the limit values are changed using the Alarm Hysteresis Values, given in Table 5-6.

Table 5-6: Alarm Hysteresis Registers

Register Description	Register Name	Read (Hex)	Write (Hex)
X Axis Alarm Hysteresis - MSB	ADLX1	9E	1E
X Axis Alarm Hysteresis - LSB	ADLX0	9F	1F
Y Axis Alarm Hysteresis - MSB	ADLY1	A0	20
Y Axis Alarm Hysteresis - LSB	ADLY0	A1	21
Z Axis Alarm Hysteresis - MSB	ADLZ1	A2	22
Z Axis Alarm Hysteresis - LSB	ADLZ0	A3	23

Since the registers are adjacent, it is not necessary to send multiple register addresses, as the MagI2C automatically will read/write to the next adjacent register.

The new lower limit and upper limit values are defined as follows:

$$AUL = M + ADL$$

$$ALL = M - ADL$$

where AUL and ALL represent the new lower and upper limit register values, M is the measured value that caused the ALARM bit to go HIGH, and ADL is the Alarm Hysteresis Value.

Example of Absolute vs Relative Alarm Modes

Table 5-7 provides an example of how the Absolute and Relative Alarm Modes work under the same conditions. This is illustrative purposes, and the MX readings would depend on many things including the cycle count value and the magnetic field. In this

case only the X axis sensor is being monitored, the ALLX register is set to 0x0A00, the AULX register is set to 0x1000, and the ADLX register is set to 0x0100.

Table 5-7: Absolute vs. Relative Alarm Mode Example

State Description	MX	Absolute Alarm Mode			Relative Alarm Mode		
		UL	LL	ALARM bit	UL	LL	ALARM bit
Initial State & Measure	0x0F00	0x10000	0x0A00	0	0x10000	0x0A00	0
Perturbation Applied & Measure	0x1100	0x10000	0x0A00	1	0x10000	0x0A00	1
Measure Again	0x1100	0x10000	0x0A00	1	0x12000	0x1000	0
Measure Again	0x1100	0x10000	0x0A00	1	0x12000	0x1000	0
Remove Perturbation& Measure	0x0F00	0x10000	0x0A00	0	0x12000	0x1000	1
Measure Again	0x0F00	0x10000	0x0A00	0	0x10000	0x0A00	0
Measure Again	0x0F00	0x10000	0x0A00	0	0x10000	0x0A00	0

5.3 Initiate a Single Measurement (0x00)

The MagI2C can operate in either a continuous measurement mode or a polling mode. This section discusses the Single Measurement Command used in a polling mode. See Section 5.2 for operation in continuous measurement mode.

To make a single measurement it is necessary to write the POLL address register, 0x00, and follow this by the POLL register byte which establishes which axes are to be measured. It is defined as shown below, where a “1” for PMX, PMY, and/or PMZ indicates the X, Y, and/or Z axis, respectively, is to be measured. Note that the DRDY line will go HIGH after all measurements requested in the Single Measurement Command byte have been completed.

Bit #	7	6	5	4	3	2	1	0
Value	0	PMZ	PMY	PMX	0	0	0	0

5.4 Confirm New Data Ready

There are several ways to determine if a measurement has been completed and data is available in the Measurement Results Registers. One method is monitoring the DRDY line for it to go HIGH. Recall that for continuous measurement mode, the DRDM bits of the Continuous Measurement Command byte establish the conditions for DRDY to go HIGH. Another option when using the SPI interface is monitoring the MISO pin for it to go HIGH. (The MISO pin is unavailable when using the I^2C interface, as it is used to set the slave address of the device.) Another option is to read from the STATUS register, as discussed below. Only one method need be used.

5.4.1 STATUS Register (0x34)

To read the Status Register, first send a read command to the STATUS register, 0xB4.

The return byte provides the contents of the Status Register:

Bit #	7	6	5	4	3	2	1	0
Value	DRDY	-	-	-	-	-	-	-

Bit 7 will be HIGH if data is available and LOW if it is unavailable. Bits 0 – 6 are indeterminate and should be ignored.

5.5 Read the Measurement Results

Each sensor reading consists of 3 bytes of data which are stored in 2's complement format (range: -8388608 to 8388607) in the Results Registers within the MagI2C. These registers are read by sending the Read Results byte, as defined below, where the values of A, B, C, and D establish the register to be addressed, as given in Table 5-8.

Bit #	7	6	5	4	3	2	1	0
Value	1	0	1	0	A	B	C	D

Table 5-8: Measurement Results Registers

Register Description	Write Address (Hex)	Read Address (Hex)
X Axis Measurement (2)	24	A4
X Axis Measurement (1)	25	A5
X Axis Measurement (0)	26	A6
Y Axis Measurement (2)	27	A7
Y Axis Measurement (1)	28	A8
Y Axis Measurement (0)	29	A9
Z Axis Measurement (2)	2A	AA
Z Axis Measurement (1)	2B	AB
Z Axis Measurement (0)	2C	AC

Normally it is only necessary to send "$A4_H$", since the register value automatically increments on the clock cycles such that after sending "$A4_H$" all 3 bytes for the X axis measurement would be clocked out, then the 3 bytes for the Y axis measurement, then the 3 bytes for the Z axis measurement. After these 9 bytes have been clocked out, the subsequent output data has no relevance.

5.6 Troubleshooting and General Information

The MagI2C incorporates several registers that can be used to help troubleshoot the system or device. These include the Built-In Self Test (BIST) register, the Handshake register, and the RevID register.

5.6.1 Built-In Self Test Register (0x33)

The Built-In Self Test (BIST) register checks the status of the internal LR circuit oscillator. Write to the BIST register by sending 0x33 followed by the BIST register values, and request a read from the BIST register by sending 0xB3. The register contents are defined below.

Bit #	7	6	5	4	3	2	1	0
Value	STE	ZOK	YOK	XOK	BW1	BW0	BP1	BP0

`

Where:

- STE – Setting this to '1' commands the MagI2C to run the built-in self test when the POLL register is written to. The end of the built-in self test sequence will be indicated by DRDY going HIGH.
- ZOK, YOK, and XOK – These read-only bits indicate whether or not the X, Y, and Z LR oscillators functioned correctly during the built-in self test. A '1' indicates a properly function oscillator. Note that STE also should be HIGH when this is read, or the reading is invalid.
- BW – These two bits define the timeout period for the LR oscillator periods, as given in Table 5-9.

Table 5-9: BIST Timeout Period

BIST Wait Time	BW1	BW0
Unused	0	0
1 Sleep Oscillation Cycle (30 µs)	0	1
2 Sleep Oscillation Cycles (60 µs)	1	0
4 Sleep Oscillation Cycles (120 µs)	1	1

- BP – These two bits define the number of LR periods for measurement during the built-in self test, as given in Table 5-10.

Table 5-10: BIST LR Periods

BIST LR Periods	BW1	BW0
Unused	0	0
1 LR Period	0	1
2 LR Periods	1	0
4 LR Periods	1	1

5.6.2 HSHAKE Register (0x35)

The HSHAKE register is used to set conditions for clearing the DRDY pin and for determining why a register command was not fulfilled. Write to the HSHAKE register by sending 0x35 followed by the BIST register values, and request a read from the HSHAKE register by sending 0xB5. The register contents are defined below.

Bit #	7	6	5	4	3	2	1	0
Value	0	NACK2	NACK1	NACK0	1	0	DRC1	DRC0

Where:

- DRC0 – Setting this to '1' means DRDY is cleared by any device register write. Clearing occurs during reception of the register address byte for the write transaction on either the SPI or I^2C interface. This is the default setting.
- DRC1 – Setting this to '1' means DRDY is cleared by reading the Measurement Results registers. Clearing occurs when the MagI2C sends back the first byte of data. This is the default setting.
- NACK0 – This read-only bit is set to '1' when writing to an undefined register.
- NACK1 – This read-only bit is set to '1' when writing into POLL when CMM is in progress or when writing to CMM when POLL is in progress.
- NACK2 – This read-only bit is set to '1' when a read for the Measurement Results registers is requested but data is not ready (DRDY = 0).

5.6.3 REVID Register (0x36)

The REVID register provides revision identification of the MagI2C. This is a single byte, read-only register. To read the REVID register, send 0xB6.

5.7 Examples using the SPI Interface

5.7.1 Set the Cycle Count Registers

A sample command sequence is provided below which sets the cycle count value to 100_D (64_H) for all 3 axes. This is purely for illustrative purposes and the value could be different and/or the number of axes to be addressed could be different.

- Start with SSN set HIGH, then set SSN to LOW.
- Send 04_H (this is the Write Command Byte to address the MSB for the X axis)
- Send 0 (value for the MSB for the X axis)
- Send 64_H (value for the LSB for the X axis - pointer automatically increments)
- Send 0 (value for the MSB for the Y axis - pointer automatically increments)
- Send 64_H (value for the LSB for the Y axis - pointer automatically increments)
- Send 0 (value for the MSB for the Z axis - pointer automatically increments)
- Send 64_H (value for the LSB for the Z axis - pointer automatically increments)
- Set SSN to HIGH

5.7.2 Making and Reading Measurements

Figure 5-1 gives the SPI activity sequence for initiating a single measurement and reading the results. The MagI2C works for either CPOL=CPHA=0 or CPOL=CPHA=1, so both cases are given. The assumption in the diagram is that the DRDY pin or the MISO line is used to establish when data is ready, but a query of the Status Register could be used instead. SPI timing requirements are discussed in Section 4.4.

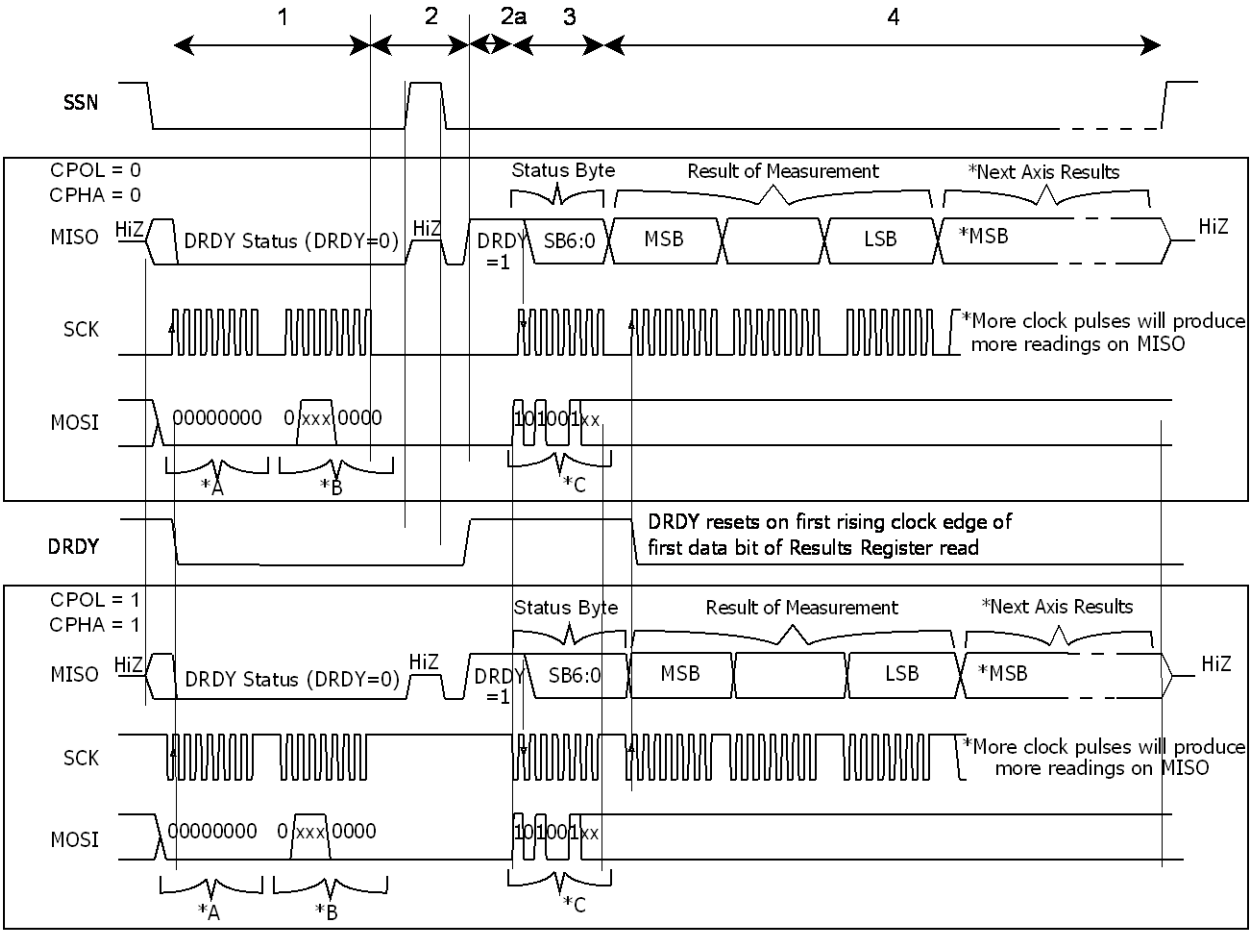

1) Host writes to POLL register (*A) with measurement parameters (*B). POLL register address = 0x00.
2) Host waiting for measurement to complete by reading the dedicated DRDY pin or DRDY status bit on the MISO pin
   2a) Host response time from DRDY
3) Host addresses MX, MY or MZ register (*C >=0x24) for measurement results
4) Host reads measurement results

Figure 5-1: SPI Activity Sequence Diagram

The steps to make measurements in Continuous Measurement Mode are given below.

- Start with SSN set HIGH, then set SSN to LOW.
- Initiate Continuous Measurement Mode by writing to the CMM register address, 0x01, followed by the CMM register value. This value defines which axes are to be measured, how the DRDY line will be set HIGH, and which type of Alarm will be implemented assuming the Alarm feature is being utilized. Assuming all 3 axes are to be measured, DRDY goes HIGH after completing measurements on all axes, and the Alarm feature is not utilized, the CMM value would be 0x79.
- The RM3100 Evaluation Board will now initiate Continuous Measurement Mode.
- Return SSN to HIGH. This will not affect the measurement process, but will free up the host to communicate with other devices and ensure the next write command sent to the module is interpreted properly.
- Once the measurement sequence is completed on all axes the MISO pin goes low and the DRDY pin is set HIGH, assuming 0x79 is the CMM register value. The module will be placed in Idle Mode until it is time to take another measurement, as defined by the TMRC register.
- When the host is ready to read the measured values, set SSN to LOW. If SSN already is LOW, then toggle SSN from LOW to HIGH to LOW.
- Assuming the X axis was one of the axes to be measured, send the MX2 Read address, 0xA4, to begin reading the Measurement Results registers. The measurement readings will now clock out, with the 3 bytes of X-axis data presented first, then Y-axis data, then Z-axis data. The first nine (9) bytes represent a complete 3-axis measurement. This will clear the DRDY line.
- Return SSN to HIGH to free up the host to communicate with other devices and to ensure the next Command Byte sent to the module is interpreted properly.

The steps to make a single measurement are given as follows.

- Start with SSN set HIGH, then set SSN to LOW.
- Initiate a single measurement by writing to the POLL register address, 0x00, followed the register address with either the POLL register value. This defines which axes are to be measured, and should be 0x70 if measurements on all three axes are desired.
- The MagI2C will now take the prescribed measurements.
- Return SSN to HIGH. This will not affect the measurement process, but will free up the host to communicate with other devices and ensure the next write command sent to the MagI2C is interpreted properly.

- Once the measurement sequence is completed on all desired axes, the DRDY pin is set HIGH and the MISO pin goes low, indicating data is read. The MagI2C is placed in Idle Mode.
- When the host is ready to read the measured values, set SSN to LOW. If SSN already is LOW, then toggle SSN from LOW to HIGH to LOW.
- Assuming the X axis was one of the axes to be measured, send the MX2 Read address, 0xA4, to begin reading the Measurement Results registers. The measurement readings will now clock out, with the 3 bytes of X-axis data presented first, then Y-axis data, then Z-axis data. The first nine (9) bytes represent a complete 3-axis measurement.
- Return SSN to HIGH to free up the host to communicate with other devices and to ensure the next Command Byte sent to the MagI2C is interpreted properly.

5.8 Examples using the I^{2}C Interface

5.8.1 Set the Cycle Count Registers

A sample command sequence is provided below which sets the cycle count value to 100_D (64_H) for all 3 axes. This is for illustrative purposes and the value could be different and/or the number of axes to be addressed could be different. Note only the initial Cycle Count register address needs to be sent, as the MagI2C automatically increments to the next register.

START	MagI2C ADDRESS							RW	ACK	CCX1 REG. ADDRESS (N)								ACK	DATA TO CCX1 REG (N)								ACK	DATA TO CCX0 REG (N+1)								ACK
S	0	1	0	0	0	X	X	0	0	0	0	0	0	0	0	1	0	0	0	0	0	0	0	0	0	0	0	0	1	1	0	0	1	0	0	0

From Host to MagI2C

From MagI2C to Host

DATA TO CCY1 REG (N+2)								ACK	DATA TO CCY0 REG (N+3)								ACK	DATA TO CCZ1 REG (N+4)								ACK	DATA TO CCZ0 REG (N+5)								ACK	STOP
0	0	0	0	0	0	0	0	0	0	1	1	0	0	1	0	0	0	0	0	0	0	0	0	0	0	0	0	1	1	0	0	1	0	0	0	P

5.8.2 Initiate a Single Measurement

The I^{2}C transactions to initiate a single measurement on all 3 axes are given below.

START	MagI2C ADDRESS							RW	ACK	POLL REG. ADDRESS (N)								ACK	DATA TO POLL REG (N)								ACK	STOP
S	0	1	0	0	0	X	X	0	0	0	0	0	0	0	0	0	0	0	0	1	1	1	0	0	0	0	0	P

From Host to MagI2C

From MagI2C to Host

After this transaction sequence the MagI2C will initiate a measurement sequence, and this can run in the background. At the end of the measurement sequence the DRDY pin is set HIGH and the Status Register will have a "1" in bit 7, indicating data is ready. The MagI2C will be placed in Idle Mode.

5.8.3 Initiate Continuous Measurement Mode

A sample I^{2}C transaction to initiate continuous measurement mode is given below.

START	MagI2C ADDRESS							RW	ACK	CMM REG. ADDRESS (N)								ACK	DATA TO CMM REG (N)								ACK	STOP
S	0	1	0	0	0	X	X	0	0	0	0	0	0	0	0	0	1	0	0	1	1	1	1	0	0	1	0	P

From Host to MagI2C

From MagI2C to Host

In this example, the CMM register is set to initiate measurements on all 3 axes, and to set DRDY to HIGH after all three measurements are made.

5.8.4 Read the Measurement Results

When the host is ready to read the Measurement Results registers, the following transactions should occur. Note only the initial Measurement Results register address needs to be sent, as the MagI2C automatically increments to the subsequent registers.

START	MagI2C ADDRESS							RW	ACK	MX2 ADDRESS (N)								ACK	STOP
S	0	1	0	0	0	X	X	0	0	0	0	1	0	0	1	0	0	0	P

From Host to MagI2C

From MagI2C to Host

START	MagI2C ADDRESS							RW	ACK	DATA FROM MX2 (N)								ACK	DATA FROM MX1 (N+1)								ACK
S	0	1	0	0	0	X	X	1	0	X	X	X	X	X	X	X	X	0	X	X	X	X	X	X	X	X	0

DATA FROM MX0 REG (N+2)								ACK	DATA FROM MY2 REG (N+3)								ACK	DATA FROM MY1 REG (N+4)								ACK	DATA FROM MY0 REG (N+5)								ACK
X	X	X	X	X	X	X	X	0	X	X	X	X	X	X	X	X	0	X	X	X	X	X	X	X	X	0	X	X	X	X	X	X	X	X	0

DATA FROM MZ2 REG (N+6)								ACK	DATA FROM MZ1 REG (N+7)								ACK	DATA FROM MZ0 REG (N+8)								NACK	STOP
X	X	X	X	X	X	X	X	0	X	X	X	X	X	X	X	X	0	X	X	X	X	X	X	X	X	0	P

The final NACK is optional, as communication will stop by simply implementing the Stop condition.