VHF Tranceiver for CUBSAT Applications

Fynn Gewiese | github

Inhaltsverzeichnis

1 Overview **1**

2 Requirements **1**

3 Transceiver **1**
3.1 SiX . . . 1
3.2 SA818-U . . . 2

4 Antenna **2**
4.1 Mechanical considerations . . . 2
4.2 Material Choice . . . 3
4.3 Simulation . . . 3
4.4 Testing . . . 3
4.5 Relevant papers: . . . 3

1 Overview

2 Requirements

Power Aestimate (Friis-Gleichung):

$$P_E = S_i(r)\, A_w = \frac{P_S\, G_{iS}\, G_{iE}}{D_F} \tag{1}$$

Power Empfang: P_E
Gain Isotroper Strahler: G_{iS}
Gain Isotroper Empfänger G_{iE}
Freiraumdämpfung: $D_F = (4\pi r/\lambda)^2$

- Frquancy Band: 134 - 174 MHz (VHF)
- Data Rate: ?
- Tx Power: ?
- Rx Sensitivity: ?

3 Transceiver

There are not many transcievers chips avaliable, more modules. Chips would require design and measurement of the antenna matching circuit, but also could possibly compensate an antenna missmatch.

- Si4464/63/61/60 (119–1050 MHz), very promising
- SA818-U looks like trash but could work
- CC1121 (technically supports 136.7-160 MHz, but requires TI support)

3.1 SiX

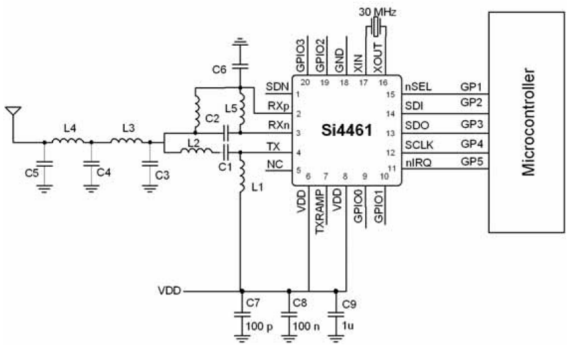

Figure 1. Si4461 Direct-Tie Application Example

3.2 SA818-U

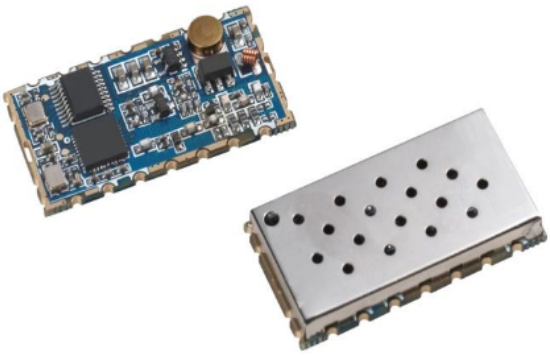

4 Antenna

4.1 Mechanical considerations

Length estimate:
regarding the conductor as an open-ended single wire transmission line (resonant stub):

$$l_{\text{monopole}} = \frac{\lambda}{4} = \frac{c}{4f} = \frac{300}{4f\,[\text{MHz}]} = \frac{75}{f\,[\text{MHz}]}\,\text{m}$$

Frequency of around 150 MHz -> length of around 0.5 m.

Requirements:

- Non ferro magnetic
- around .5 m long

Spring based system:

Roll based system:

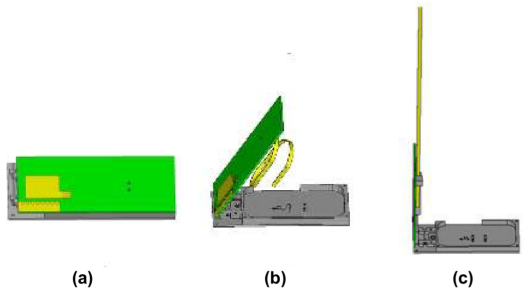

FIGURE 2. Schematic diagram of antenna expansion process. (a) fold state (b) Semi-expanded state (c) deployable state.

Abbildung 1: paper

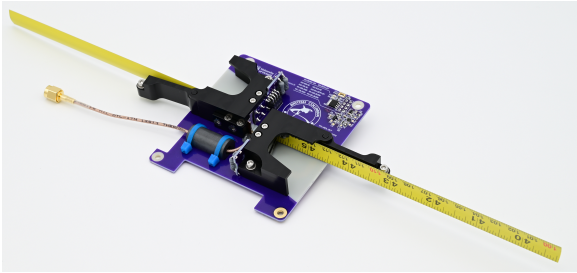

4.2 Material Choice

- strip steel. Used in tape measures. ferromagnetic but serves as comparison.
- 13RM19. strip steel but special non ferromagnetic. hard to obtain
- 1.4310. brother of 13RM19
- Beryllium copper (C17200). no way that this springs. on amazon

material	magnetization	Dehngrenze $R_{p0,2\%}$ N/mm^2	elastisity kN/mm^2	specific R
1.4310	low	210	200	

4.3 Simulation

4.4 Testing

4.5 Relevant papers:

- Compact UHF/VHF Monopole Antennas for CubeSats Applications
-