VHF Tranceiver for CUBSAT Applications

Fynn Gewiese | github

Inhaltsverzeichnis

1 Requirements **1**

2 Transceiver **3**
2.1 Selection . . . 3
2.2 CC1121/5 . . . 3
2.3 SA818-U . . . 4
2.4 Si446x . . . 4

3 Antenna **4**
3.1 Mechanical considerations . . . 4
3.2 Material Choice . . . 5
3.3 Simulation . . . 5
3.4 Testing . . . 5
3.5 Relevant papers: . . . 5

1 Requirements

- Frequency Band: 134–174 MHz (VHF)
- Data Rate: > 1k bps
- Tx Power: 0.3 W / -5.2 dBW / 25.8 dBm
- Antenna Gain Satellite: >= 2.2 dBi
- Sattellite Effective Isotropic Radiated Power: -5.3 dBW
- Rx Sensitivity:
- TCXO Temperature Compensated Crystal Oscillator

Downlink VHF

Parameter	Value	Units
Spacecraft:		
Spacecraft Transmitter Power Output:	0.3	W
In dBW:	-5.2	dBW
In dBm:	24.8	dBm
Spacecraft Total Transmission Line Losses:	2.2	dB
Spacecraft Antenna Gain:	2.2	dBi
Spacecraft EIRP:	-5.3	dBW
Downlink Path:		
Spacecraft Antenna Pointing Loss:	4.7	dB
S/C-to-Ground Antenna Polarization Loss:	0.1	dB
Path Loss:	142.1	dB
Atmospheric Loss:	2.1	dB
Ionospheric Loss:	0.4	dB
Rain Loss:	0	dB
Isotropic Signal Level at Ground Station:	154.9	dBW
Ground Station (EbNo Method):		
Ground Station Antenna Pointing Loss:	0.2	dB
Ground Station Antenna Gain:	14.1	dBi
Ground Station Total Transmission Line Losses:	2	dB
Ground Station Effective Noise Temperature:	510	K
Ground Station Figure of Merrit (G/T):	15	dB/K
G.S. Signal-to-Noise Power Density (S/No):	58.5	dBHz
System Desired Data Rate:	1000	bps
In dBHz:	30	dBHz
Telemetry System Eb/No for the Downlink:	28.5	dB
Demodulation Method Seleted:	FM	
Forward Error Correction Coding Used:	None	
System Allowed or Specified Bit-Error-Rate:	0.0001	
Eb/No Threshold:	21	dB
System Link Margin:	7.5	dB

Random Requirements from Christian

Friis Power Estimate:

$$P_R = P_T \frac{G_T G_R \lambda^2}{(4\pi)^2 d^2}$$

- P_R: Power available from receiving antenna
- P_T: Power supplied to the transmitting antenna
- G_R: Gain in receiving antenna
- G_T: Gain in transmitting antenna
- d: Distance
- c: Speed of light in vacuum 299.972458·106 [m/s]
- λ: Wavelength; where $\lambda = c / f$
- f: Frequency

Equation 5 describes the signal level at the receiver (P_R) in relation to the transmitter output power (P_T), distance (d), frequency (λ) and antenna gain (G_T and G_R).

Abbildung 1

2 Transceiver

2.1 Selection

There are not many transcievers chips avaliable. Chips would require design and measurement of the antenna matching circuit, but also could possibly compensate an antenna missmatch.

- CC1121/5 digital and well documented. Requires PA like SMA70-2
- ADF7020-1BCPZ-RL7 cheap Analog Devices.
- SA818-U looks like trash because it is. Analog FM
- SX1261/2 150 MHz - 960 MHz
- Si446x (119–1050 MHz), looks perfect, reddit says is a bit buggy.
- AX5043 Good things on the internet. N.A and Dead but apperently good

2.2 CC1121/5

Pin compatible Chips, CC1125 has a more narrow band than CC1121 so is to be preferred. Can be paired with a power amplifier like Gali 74+ to get +38 dBm :) youtube link

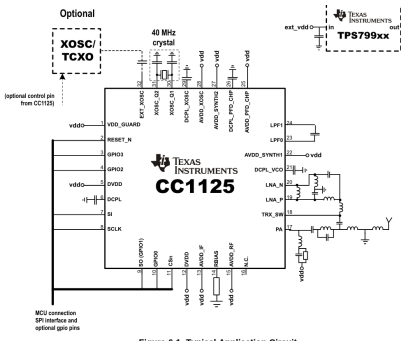

Abbildung 2: cc1125

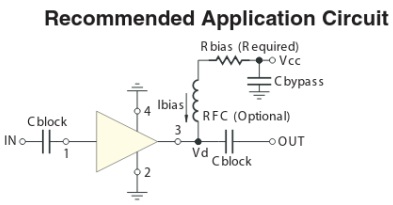

Abbildung 3: Gali74 +

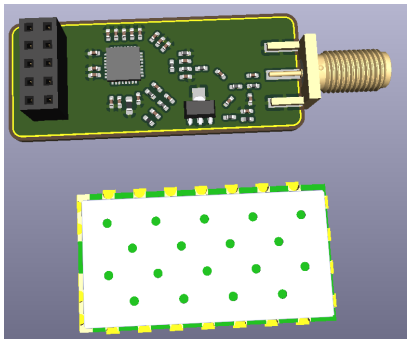

Abbildung 4: 3D render

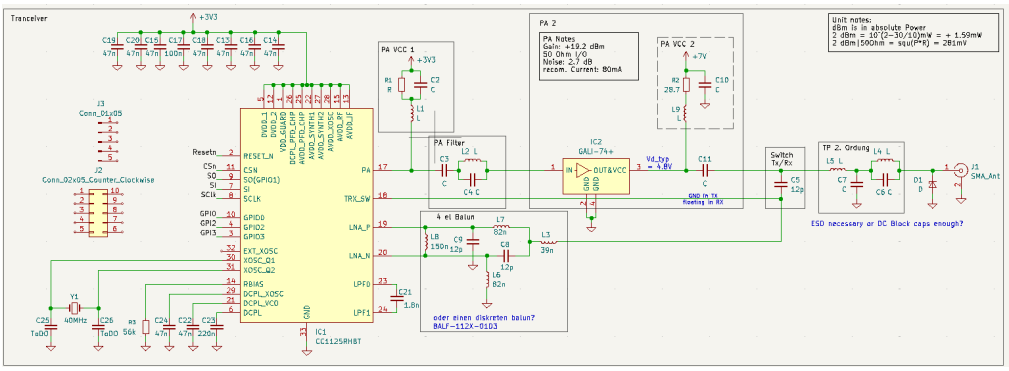

Abbildung 5: schematic

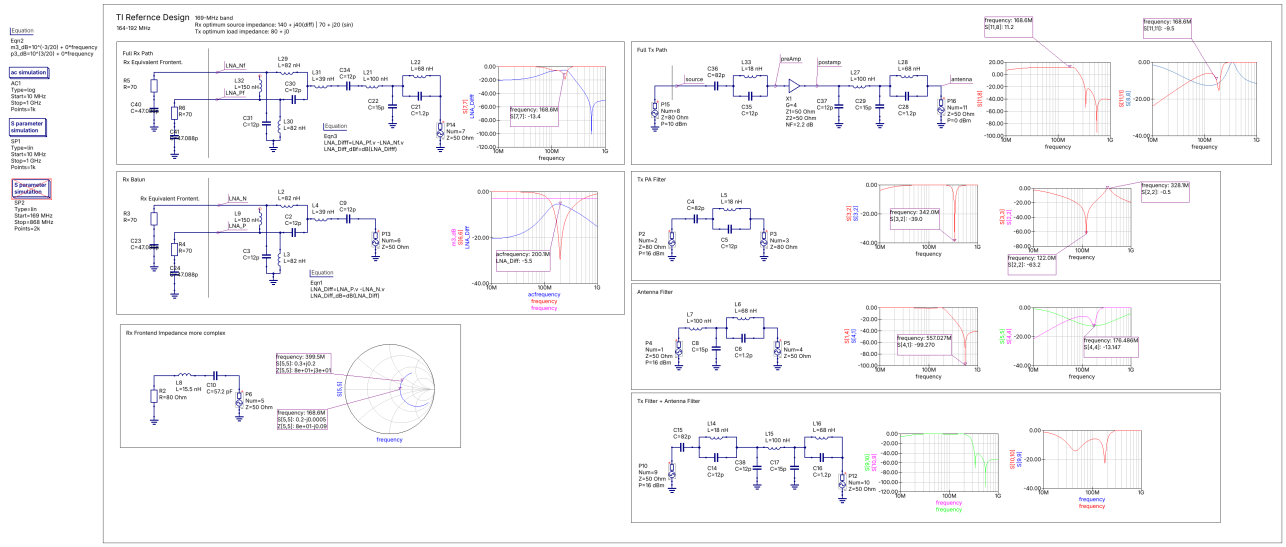

2.3 SA818-U

RDA1846 (8 dBm) chip + PA + microcontroller. Disassembly

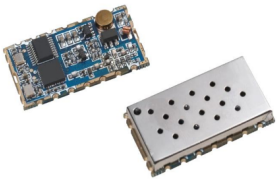

2.4 Si446x

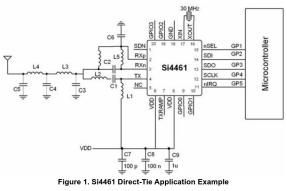

3 Antenna

3.1 Mechanical considerations

Requirements:

- Non ferro magnetic
- good impedance match

Length estimate: .

Often used for monopoles are $\lambda/4$:

$$l_{\text{monopole}} = \frac{\lambda}{4} = \frac{c}{4f} = \frac{300}{4f\,[\text{MHz}]} = \frac{75}{f\,[\text{MHz}]}\,\text{m} = 0.5\ m \text{ at } 150 \text{ MHz}$$

Also commonly commercial used antennas are $5/8\lambda$ lengths. That is around 125 cm comertial example.

Ti Research of 196 MHz Antennas .

169-MHz Band Measurement Summary

These antennas can be used in the frequency band of 136 MHz to 240 MHz. The 169 MHz was chosen so the characteristics of the antenna can be compared.

PCB Antennas (169 MHz)

Not recommended due to physical size.

Chip Antennas (169 MHz)

Not recommended due to poor performance for compact designs.

Wire/Stanced Antennas (169 MHz)

Table 22. 169-MHz Wire Antennas

	Board #7 (Section 2.1.7) (169 MHz)	Board #15 (169 MHz)
	ProANT Report (Section A.7)	Simulation Report
Test Description	**Test Result**	**Test Result**
Total Radiated Power	-6.5 dBm	-7.0 dBm *1

Antenna Efficiency Summary (169 MHz)

Recommend to use the ProANT Onboard 169 antenna since ProANT provides excellent support and has on-site chamber to measure at 169 MHz.

Table 23. Total Radiated Power (TRP) (169 MHz)

Ranking	Description	TRP Efficiency [%]	Comments
1	Ex-it BS 169	81%	1m dipole antenna
2	Ex-it 169	32%	ProANT 169 MHz kit antenna
3 (RECOMMENDED)	CC-Antenna-DK2 #7 (Section 2.1.7)	22%	ProANT Onboard 169
4	W3100	20% *1	Pulse *1: simulated
5	CC-Antenna-DK1 #14	14%	Previous antenna kit

Abbildung 6: Ti application note swra496a page 45 antenna comparison

Spring based system: .

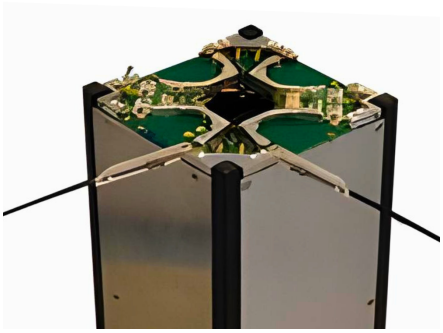

Abbildung 7: Commertial solution ISISPACE VHF/UHF antenna

Roll based system: .

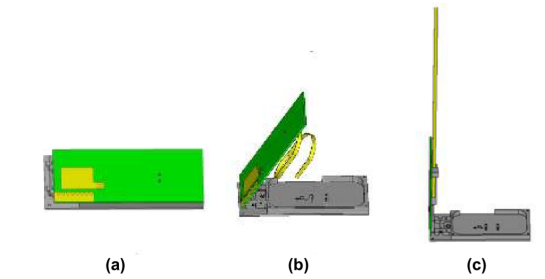

FIGURE 2. Schematic diagram of antenna expansion process. (a) fold state (b) Semi-expanded state (c) deployable state.

Abbildung 8: paper

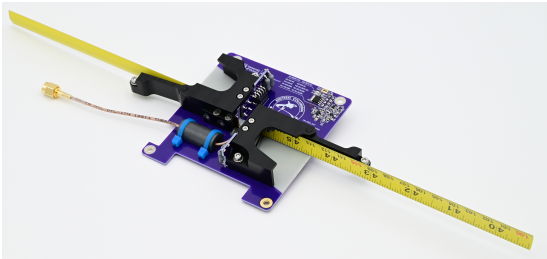

Abbildung 9: OrcaSat

SMD Antenna: .

Abbildung 10: OnBoard PRO-OB-508

3.2 Material Choice

- strip steel. Used in tape measures. ferromagnetic but serves as comparison.
- 13RM19. strip steel but special non ferromagnetic. hard to obtain
- 1.4310. brother of 13RM19
- Beryllium copper (C17200). no way that this springs. on amazon

material	magnetization	Dehngrenze $R_{p0,2\%}$ N/mm^2	elastisity kN/mm^2	specific R
1.4310	low	210	200	

3.3 Simulation

3.4 Testing

3.5 Relevant papers:

- Compact UHF/VHF Monopole Antennas for CubeSats Applications
-