VHF Tranceiver for CUBSAT Applications

Fynn Gewiese | github

Inhaltsverzeichnis

1 Overview **1**
1.1 Requirements . . . 1

2 Transceiver **1**
2.1 Selection . . . 1
2.2 CC1121/5 . . . 2
2.3 SA818-U . . . 2
2.4 Si446x . . . 3

3 Antenna **3**
3.1 Mechanical considerations . . . 3
3.2 Material Choice . . . 4
3.3 Simulation . . . 4
3.4 Testing . . . 4
3.5 Relevant papers: . . . 4

1 Overview

1.1 Requirements

- Frequency Band: 134–174 MHz (VHF)
- Data Rate: > 1k bps
- Tx Power: 0.3 W / -5.2 dBW / 25.8 dBm
- Antenna Gain Satellite: >= 2.2 dBi
- Sattellite Effective Isotropic Radiated Power: -5.3 dBW
- Rx Sensitivity:
- TCXO Temperature Compensated Crystal Oscillator

Downlink VHF

Parameter	Value	Units
Spacecraft:		
Spacecraft Transmitter Power Output:	0.3	W
In dBW:	-5.2	dBW
In dBm:	24.8	dBm
Spacecraft Total Transmission Line Losses:	2.2	dB
Spacecraft Antenna Gain:	2.2	dBi
Spacecraft EIRP:	-5.3	dBW
Downlink Path:		
Spacecraft Antenna Pointing Loss:	4.7	dB
S/C-to-Ground Antenna Polarization Loss:	0.1	dB
Path Loss:	142.1	dB
Atmospheric Loss:	2.1	dB
Ionospheric Loss:	0.4	dB
Rain Loss:	0	dB
Isotropic Signal Level at Ground Station:	154.9	dBW
Ground Station (EbNo Method):		
Ground Station Antenna Pointing Loss:	0.2	dB
Ground Station Antenna Gain:	14.1	dBi
Ground Station Total Transmission Line Losses:	2	dB
Ground Station Effective Noise Temperature:	510	K
Ground Station Figure of Merrit (G/T):	15	dB/K
G.S. Signal-to-Noise Power Density (S/No):	58.5	dBHz
System Desired Data Rate:	1000	bps
In dBHz:	30	dBHz
Telemetry System Eb/No for the Downlink:	28.5	dB
Demodulation Method Seleted:	FM	
Forward Error Correction Coding Used:	None	
System Allowed or Specified Bit-Error-Rate:	0.0001	
Eb/No Threshold:	21	dB
System Link Margin:	7.5	dB

Random Requirements from Christian

2 Transceiver

Friis Power Estimate:

2.1 Selection

There are not many transcievers chips avaliable, more modules. Chips would require design and measurement of the antenna matching circuit, but also could possibly compensate an antenna missmatch.

- CC1121/5 digital and well documented. Requires PA like SMA70-2

$$P_R = P_T \frac{G_T G_R \lambda^2}{(4\pi)^2 d^2}$$

- P_R: Power available from receiving antenna
- P_T: Power supplied to the transmitting antenna
- G_R: Gain in receiving antenna
- G_T: Gain in transmitting antenna
- d: Distance
- c: Speed of light in vacuum 299.972458·106 [m/s]
- λ: Wavelength; where λ = c / f
- f: Frequency

Equation 5 describes the signal level at the receiver (P_R) in relation to the transmitter output power (P_T), distance (d), frequency (λ) and antenna gain (G_T and G_R).

Abbildung 1

- SA818-U looks like trash because it is. Analog FM
- SX1261/2 150 MHz - 960 MHz
- Si446x (119–1050 MHz), looks perfect, reddit says is a bit buggy.
- AX5043 Good things on the internet. N.A and Dead but apperently good

2.2 CC1121/5

Pin compatible Chips, CC1125 has a more narrow band than CC1121 so is to be preferred. Can be paired with a power amplifier like Gali 74+ to get +38 dBm :) youtube link

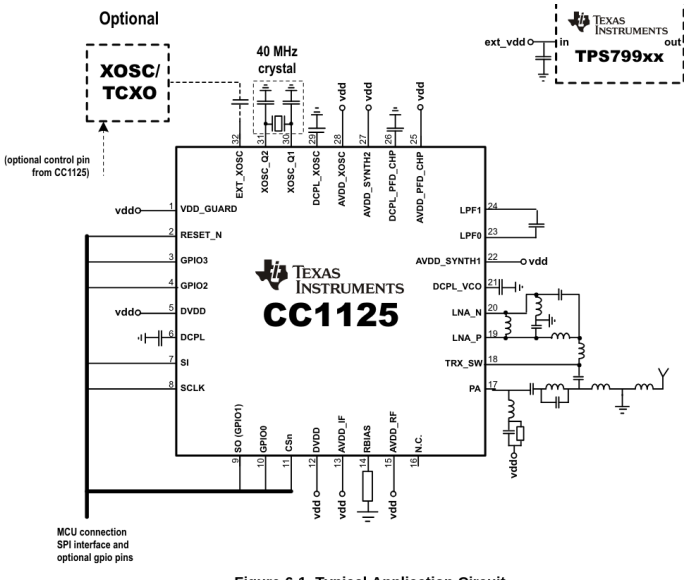

Abbildung 2

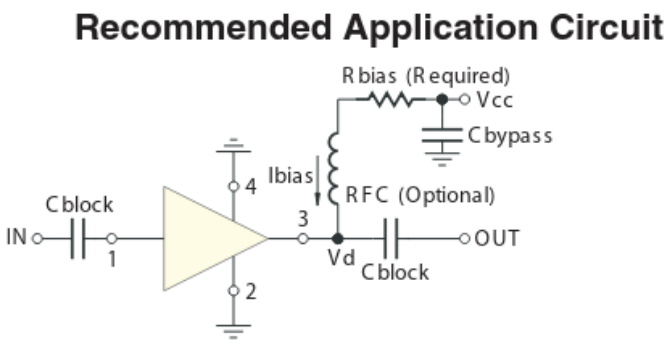

Abbildung 3: Gali74 application circuit

2.3 SA818-U

RDA1846 (8 dBm) chip + PA + microcontroller. Disassembly

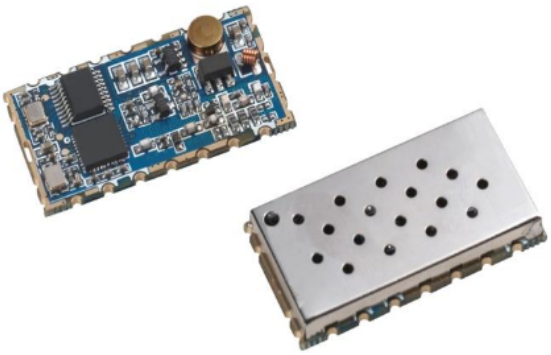

2.4 Si446x

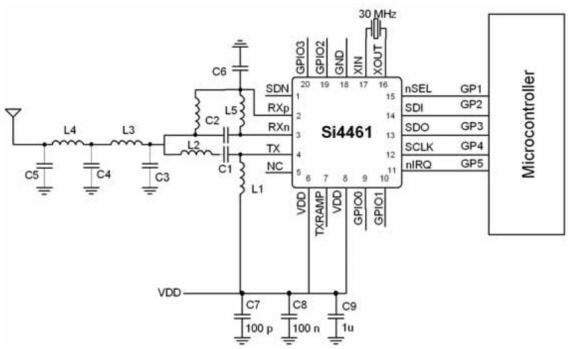

Figure 1. Si4461 Direct-Tie Application Example

3 Antenna

3.1 Mechanical considerations

Length estimate:
regarding the conductor as an open-ended single wire transmission line (resonant stub):

$$l_{\text{monopole}} = \frac{\lambda}{4} = \frac{c}{4f} = \frac{300}{4f\,[\text{MHz}]} = \frac{75}{f\,[\text{MHz}]}\,\text{m}$$

Frequency of around 150 MHz -> length of around 0.5 m.

Requirements:

- Non ferro magnetic
- around .5 m long

Spring based system:

Roll based system:

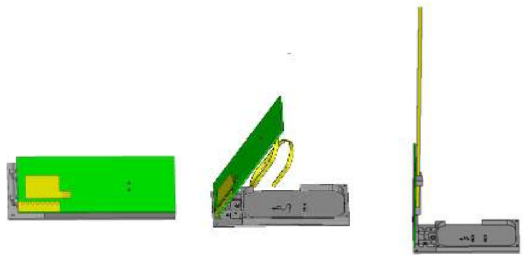

FIGURE 2. Schematic diagram of antenna expansion process. (a) fold state (b) Semi-expanded state (c) deployable state.

Abbildung 4: paper

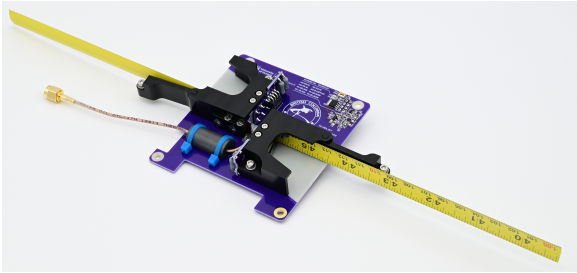

3.2 Material Choice

- strip steel. Used in tape measures. ferromagnetic but serves as comparison.
- 13RM19. strip steel but special non ferromagnetic. hard to obtain
- 1.4310. brother of 13RM19
- Beryllium copper (C17200). no way that this springs. on amazon

material	magnetization	Dehngrenze $R_{p0,2\%}$ N/mm^2	elastisity kN/mm^2	specific R
1.4310	low	210	200	

3.3 Simulation

3.4 Testing

3.5 Relevant papers:

- Compact UHF/VHF Monopole Antennas for CubeSats Applications
-