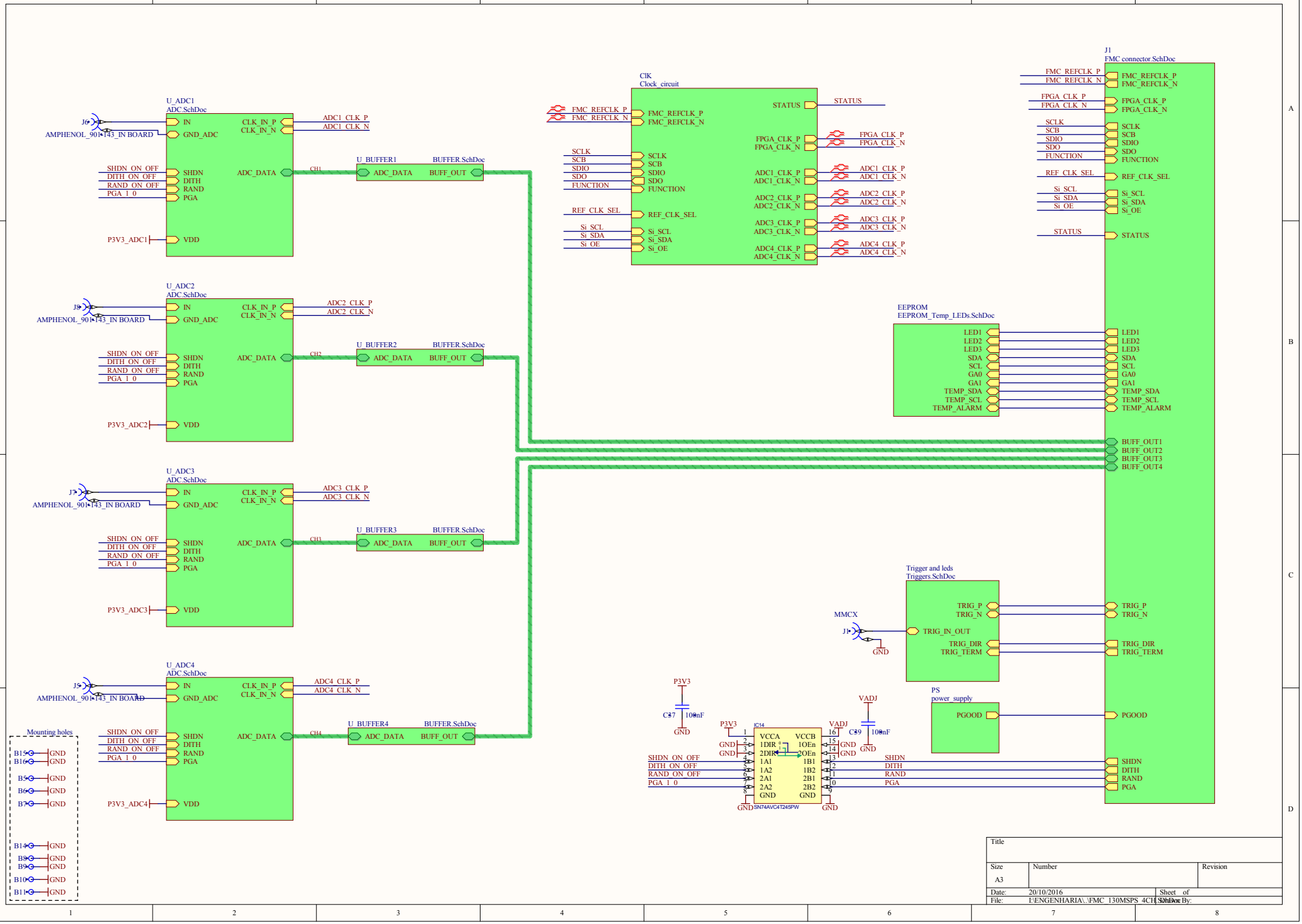

Title		
Size A3	Number	Revision
Date: 20/10/2016	Sheet of	
File: I:\ENGENHARIA\..\FMC_130MSPS_4CH.SchDoc	Drawn By:	