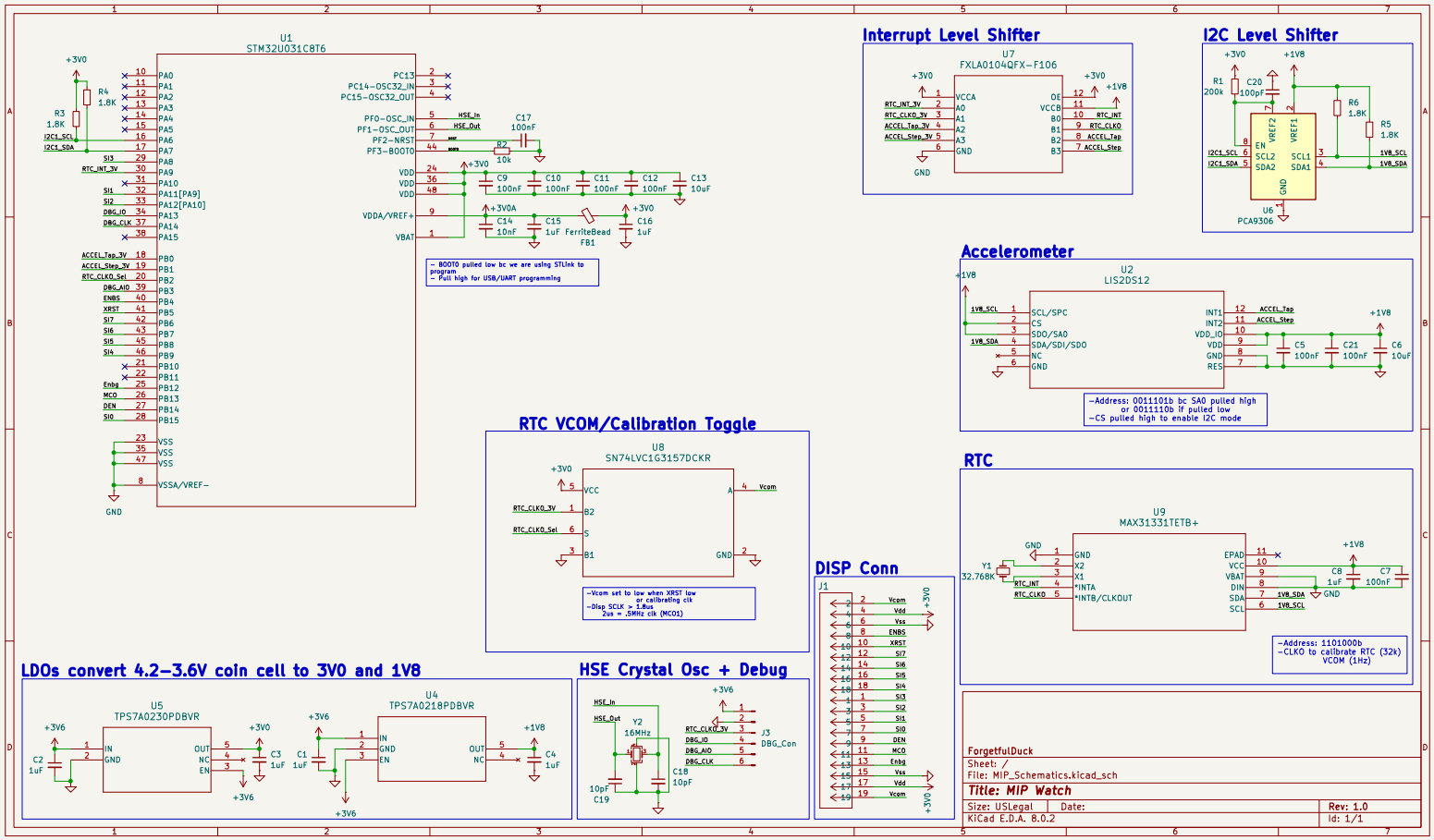
U1
STM32U031C8T6
Interrupt Level Shifter
U7
FXLA0104QFX-F106
I2C Level Shifter
U6
PCA9306
Accelerometer
U2
LIS2DS12
-Address: 0011101b bc SA0 pulled high
or 0011110b if pulled low
-C5 pulled high to enable I2C mode
RTC VCOM/Calibration Toggle
U8
SN74LVC1G3157DCKR
-Vcom set to low when XRST low
or calibrating clk
-Disp SCLK > 1.8us
2us = .5MHz clk (MCO1)
RTC
U9
MAX31331TETB+
-Address: 1101000b
-CLKO to calibrate RTC (32k)
VCOM (1Hz)
DISP Conn
J1
LDOs convert 4.2-3.6V coin cell to 3V0 and 1V8
U5
TPS7A0230PDBVR
U4
TPS7A0218PDBVR
HSE Crystal Osc + Debug
Y2
16MHz
J3
DBG_Con
ForgetfulDuck
Sheet: /
File: MIP_Schematics.kicad_sch
Title: MIP Watch
Size: USLegal
Date:
Rev: 1.0
KiCad E.D.A. 8.0.2
Id: 1/1