FAM: A Self-Supervised Forecast-Anything Model for Multivariate Time Series Events

Anonymous Author(s)

Abstract

Predicting events in multivariate time series - loss of a turbine blade, an anomalous server spike, a cardiac arrhythmia - demands methods that generalise across event types and domains, especially when labels are scarce. Existing approaches silo each event type into a separate supervised model and evaluate with incomparable, domain-specific metrics. We introduce FAM (Forecast-Anything Model), built on two ideas. First, *predictor finetuning*: a causal encoder pretrained via a Joint Embedding Predictive Architecture (JEPA) [Assran et al., 2023] learns to predict future representations in latent space with no labels; downstream, we freeze the encoder and finetune only the horizon-conditioned predictor ($\sim 9\%$ of parameters) for each event type. Second, we evaluate all tasks through a probability surface $p(t, \Delta t)$ - event probability as a function of observation time and prediction horizon Δt - parameterized as a discrete-time survival CDF that is monotonically non-decreasing by construction. Across 11 datasets in 7 domains, a single 2.16M-parameter architecture with no dataset-specific hyperparameters matches or exceeds domain-specific baselines, matching Chronos-2 on turbofan prognostics with $24\times$ fewer trainable parameters while outperforming it on the majority of benchmarks where domain-specific pretraining provides an edge. Code and stored probability surfaces at `https://github.com/Forgis-Research/IndustrialJEPA`.

1 Introduction

A turbine blade cracks after 12,000 flight hours. A satellite sensor drifts silently for 48 hours. A patient's ECG shifts six hours before cardiac arrest. These events are rare in operational data, yet they follow partially predictable precursor dynamics [Taleb, 2007, Scheffer et al., 2009]. Current methods treat each event type as a separate supervised problem: RUL models [Fan et al., 2024] never see anomaly benchmarks; anomaly detectors [Xu et al., 2022, He et al., 2026] never predict time-to-failure.

Yet every event prediction task has the same structure: given observations up to time t, estimate $P(\text{event within } \Delta t)$ for each horizon Δt. The model that produces this probability surface does not need to know what kind of event it is predicting. It needs to learn the dynamics of normality; the deviation from that normality defines the event.

FAM. JEPA [Assran et al., 2023] trains an encoder to predict future *representations* rather than reconstructing raw inputs, avoiding pixel-level bias. We apply this to time series: a causal Transformer encodes observations up to t into $\mathbf{h}_t$; a horizon-conditioned predictor g_ϕ maps $(\mathbf{h}_t, \Delta t)$ to a predicted future representation, forcing the encoder to internalise dynamics at multiple timescales. Pretraining uses standard components (patches [Nie et al., 2023], instance normalisation [Kim et al., 2022b], causal attention, EMA target) and is self-supervised.

Core idea: predictor finetuning. After pretraining, every SSL method discards its prediction head and probes the encoder. We do the opposite: freeze the encoder, finetune the predictor. The predictor is a small horizon-conditioned MLP ($\sim 9\%$ of parameters) that, together with a per-horizon event

Preprint.

head, is more expressive than a linear probe but far cheaper than end-to-end finetuning. The output is parameterized as a discrete-time survival CDF [Lee et al., 2018], guaranteeing that event probabilities are monotonically non-decreasing in the prediction horizon by construction.

Contributions.

1. **Predictor finetuning as the downstream recipe.** Freeze the encoder, finetune the predictor + head. This achieves the same AUPRC as end-to-end finetuning with $24\times$ fewer trainable parameters and tighter cross-seed variance (sections 6.1 and 6.2).
2. **Multi-domain event prediction under a unified metric.** One architecture across 11 datasets in 7 domains, evaluated through the same probability surface $p(t, \Delta t)$ scored by AUPRC, threshold-free and robust to class imbalance (sections 4 and 5).

2 Related Work

Self-supervised learning for time series. Contrastive methods (TS2Vec [Yue et al., 2022], TNC [Tonekaboni et al., 2021]) learn by contrasting pairs. Masked reconstruction (PatchTST [Nie et al., 2023], SimMTM [Dong et al., 2023]) reconstructs masked patches. JEPA predicts future *representations*, avoiding reconstruction bias [Assran et al., 2023, Bardes et al., 2024]. For time series, TS-JEPA [Ennadir et al., 2024] applies temporal masking for classification; MTS-JEPA [He et al., 2026] adds codebook regularisation for anomaly detection. All of these discard their pretraining head at inference and probe only the encoder. We keep the predictor and show it carries event-relevant signal.

Foundation models for time series. Chronos [Ansari et al., 2024], TimesFM [Das et al., 2024], and MOMENT [Goswami et al., 2024] pretrain on large-scale corpora for generic value forecasting (predicting next values). FAM targets a different output: event probabilities rather than future channel values. The encoder is mid-scale ($\approx$2.16M) and pretrained per-dataset rather than on a massive corpus; what transfers across domains is the *recipe* (architecture + predictor finetuning), not the weights. We benchmark against `amazon/chronos-2` (section 5.2).

Prognostics and anomaly prediction. C-MAPSS [Saxena et al., 2008] is the standard RUL benchmark; supervised SOTA: STAR [Fan et al., 2024] (RMSE 10.61). Anomaly prediction methods (Anomaly Transformer [Xu et al., 2022], DCdetector [Yang et al., 2023], TranAD [Tuli et al., 2022]) report point-adjusted F1 (PA-F1), which inflates scores by crediting entire segments from a single detection [Schmidl et al., 2022]. We replace these incomparable metrics with AUPRC pooled over the probability surface (section 4).

Channel strategies. PatchTST [Nie et al., 2023] showed channel-independent processing often wins; iTransformer [Liu et al., 2024] showed variate-as-token wins on high-correlation data. Our default is channel-fusion (linear projection); we ablate against sensor-as-token (section 6).

3 Method

3.1 Preprocessing

We follow standard practice for multi-domain time series [Nie et al., 2023, Ansari et al., 2024, Goswami et al., 2024]: patch tokenisation with per-window instance normalisation.

Patches. $P{=}16$ consecutive raw samples form one token. This is fixed for all datasets with sufficient temporal resolution (sample rate $\geq$ 1/min); for coarsely sampled data (PhysioNet at 1/hour), we use $P{=}1$ so that the causal transformer receives enough tokens. Table 1 lists the resulting token counts. The encoder requires a minimum context of $\sim$128 timesteps ($\sim$8 tokens) for self-attention to be effective. The context length is variable at both training and inference: for prognostic datasets with a clear lifecycle start (C-MAPSS), we feed the full history; for continuous monitoring streams (SMAP, PSM), we use a sliding window of 512 steps.

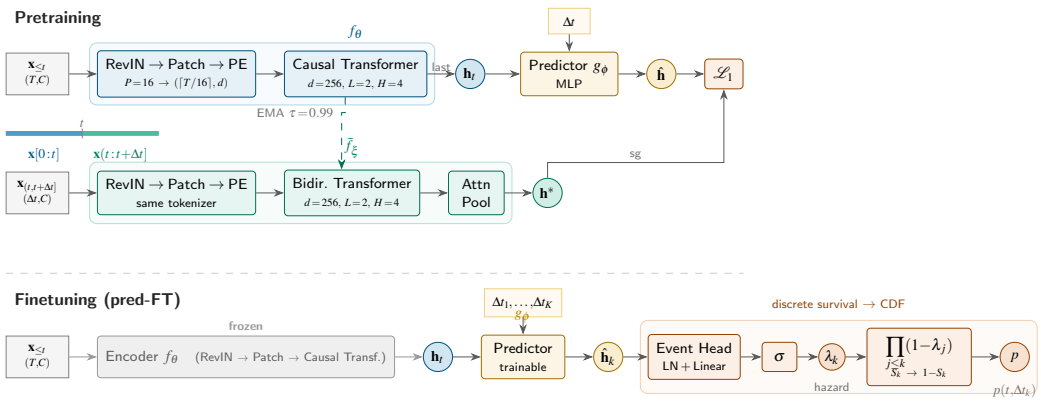

Figure 1: **FAM architecture.** *Top:* pretraining. The context encoder f_θ (causal) produces $\mathbf{h}_t$; the predictor g_ϕ maps $(\mathbf{h}_t, \Delta t)$ to $\hat{\mathbf{h}}$; the EMA target encoder $\bar{f}_\xi$ (bidirectional + attention pool) provides the L1 target $\mathbf{h}^*$ from the interval $\mathbf{x}_{(t,t+\Delta t]}$. *Bottom:* finetuning. The encoder is frozen; the predictor runs at K horizons; per-horizon hazard logits pass through sigmoid $\to$ conditional hazards $\lambda_k \to$ cumulative product $\to$ survival CDF $p(t, \Delta t_k)$, which is monotonically non-decreasing by construction.

Instance normalisation. Per window, per channel: subtract the window mean, divide by the window standard deviation. This removes distribution shift across machines and operating conditions without requiring training-set statistics at inference.

Projection. A linear layer $\mathbf{W} \in \mathbb{R}^{d\times(C\cdot P)}$ maps each patch to a d-dimensional token (d=256; C = number of channels, P = patch length). Sinusoidal positional encodings are added.

Table 1: Dataset overview. P=16 for all datasets with sufficient temporal resolution; P=1 for hourly clinical data (PhysioNet) where stays are too short for coarser tokenisation.

Dataset	Sensors	Rate	Patch P	Typical context
C-MAPSS FD001-004	14	1/cycle	16	full history (8–23 tokens)
SMAP / MSL	25 / 55	1 Hz	16	sliding 512 steps (32 tokens)
PSM	25	1/min	16	sliding 512 steps (32 tokens)
SMD	38	1/min	16	sliding 512 steps (32 tokens)
MBA (ECG)	2	275 Hz	16	sliding 512 steps (32 tokens)
GECCO (water)	9	1/min	16	sliding 512 steps (32 tokens)
BATADAL (ICS)	43	1/hour	16	sliding 512 steps (32 tokens)
PhysioNet 2012	36	1/hour	1	full stay (6–48 tokens)

3.2 Architecture

Context encoder f_θ: a causal Transformer (d=256, 2 layers, 4 heads). Given observations $\mathbf{x}_{\leq t}$, it produces a summary embedding:

$$\mathbf{h}_t = f_\theta(\mathbf{x}_{\leq t}) \in \mathbb{R}^d. \tag{1}$$

Predictor g_ϕ: a 2-layer MLP. Given $\mathbf{h}_t$ and a prediction horizon Δt, it produces a predicted embedding of the future interval $(t, t{+}\Delta t]$:

$$\hat{\mathbf{h}}_{(t,t+\Delta t]} = g_\phi(\mathbf{h}_t, \Delta t). \tag{2}$$

During pretraining, $\Delta t \sim \mathrm{LogU}[1, \Delta t_{\max}]$ is sampled randomly, forcing the encoder to internalise dynamics at multiple timescales.

Target encoder $\bar{f}_\xi$: an EMA copy of f_θ (τ=0.99) that encodes the next Δt steps $\mathbf{x}_{(t,t+\Delta t]}$ bidirectionally with attention pooling $\to \mathbf{h}^*_{(t,t+\Delta t]} \in \mathbb{R}^d$. Crucially, the target interval starts immediately at t; there is no gap between context and target. The same interval is used for event prediction

downstream (section 3.3). We also experiment with a curriculum variant that transitions from EMA to SIGReg spectral regularisation [Balestriero and LeCun, 2025] (which eliminates the target encoder entirely; see section 6).

Pretraining loss: $\mathcal{L} = \|\hat{\mathbf{h}}_{(t,t+\Delta t]} - \text{sg}(\mathbf{h}^*_{(t,t+\Delta t]})\|_1 + \lambda \cdot \text{var-reg}$, where sg denotes stop-gradient.

3.3 Downstream: Freeze Encoder, Finetune Predictor

Given event labels, we freeze f_θ and finetune g_ϕ + a linear head:

Table 2: Finetuning modes. Predictor-FT is our default.

Mode	Encoder	Predictor	Head	Params tuned
Frozen probe	frozen	frozen	LN + linear	513
Predictor-FT	**frozen**	**finetuned**	**LN + linear**	$\approx$ **198K**
E2E	finetuned	finetuned	LN + linear	$\approx$ 2.16M

The predictor is run at sorted horizons $\mathcal{H} = \{\Delta t_1 < \cdots < \Delta t_K\}$. A shared linear head maps each predicted representation to a per-interval *conditional hazard*:

$$\lambda_k(t) \;=\; \sigma\big(\mathbf{w}^\top \hat{\mathbf{h}}_{(t,t+\Delta t_k]} + b\big) \;\in\; (0,1), \tag{3}$$

where $\lambda_k(t) = P(\text{event in } (\Delta t_{k-1}, \Delta t_k] \mid T^* > \Delta t_{k-1}, \mathbf{x}_{\leq t})$ and T^* is the time-to-next-event. No distributional assumptions are required: each λ_k is a free function of $\mathbf{h}_t$ via the predictor network. The event probability surface is the discrete-time survival CDF [Lee et al., 2018, Ren et al., 2019]:

$$p(t, \Delta t_k) \;=\; 1 - \prod_{j=1}^{k} (1 - \lambda_j(t)). \tag{4}$$

The finetuning loss sums positive-weighted binary cross-entropy over horizons:

$$\mathcal{L}_{\text{FT}} = \sum_{k=1}^{K} w^+ \cdot \text{BCE}\big(p(t, \Delta t_k),\; y(t, \Delta t_k)\big), \tag{5}$$

where $y(t, \Delta t) = \mathbb{1}[\text{event in } (t, t{+}\Delta t]]$ and $w^+ = N_{\text{neg}}/N_{\text{pos}}$. Two structural properties follow from the parameterization, not from post-hoc enforcement:

1. **Monotonicity by construction.** Each factor $(1 - \lambda_j) \in (0,1)$, so the survival product $\prod_{j \leq k}(1 - \lambda_j)$ is non-increasing in k, and $p(t, \Delta t_k) = 1 - \prod(\cdot)$ is non-decreasing. Zero violations by design.
2. **Interval arithmetic.** $P(\text{event in } (t{+}a,\; t{+}b]) = p(t,b) - p(t,a)$ for $b > a$, since p is a valid CDF.

4 Evaluation

The model outputs $p(t, \Delta t)$ (eq. (4)) for each observation time t and prediction horizon Δt. This probability surface is the complete prediction; every metric we report - and every metric prior work reports - is a readout of it.

4.1 Standard Metrics, Derived from the Surface

We do not propose a new metric. Instead, we compute exactly the metrics each baseline uses - RMSE for C-MAPSS [Fan et al., 2024], PA-F1 for anomaly benchmarks [Xu et al., 2022, He et al., 2026], AUROC for clinical datasets - *from the same stored surface*. Every number in the "Legacy (ours)" column of table 4 is the standard metric for that domain, computed from our probability surface using the standard protocol, enabling direct head-to-head comparison.

The surface also supports a single cross-domain metric. Events are rare: turbine failure happens once per lifecycle; anomaly segments cover $\sim$1$-$13% of test data. We use **AUPRC** (area under the precision-recall curve), which is threshold-free and robust to class imbalance:

$$\text{AUPRC} \;=\; \int_0^1 \text{Precision}(r)\, dr \tag{6}$$

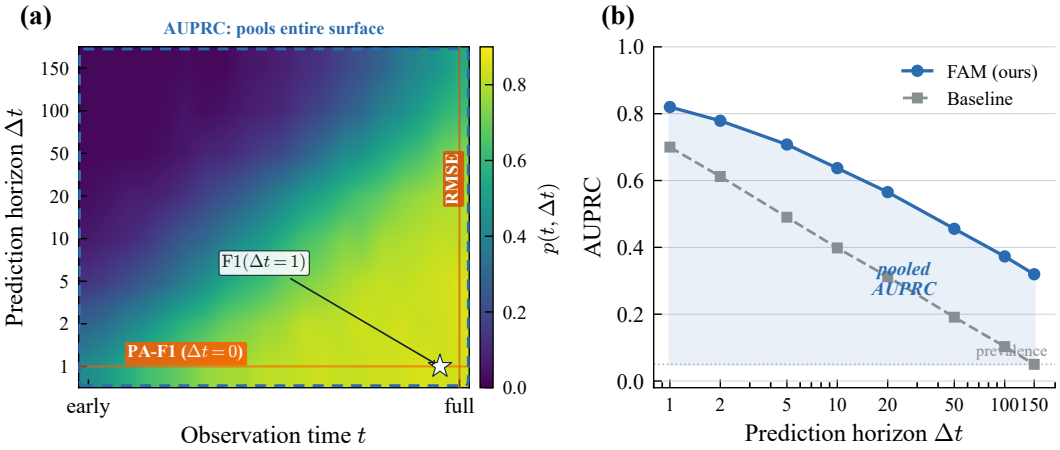

Figure 2: **Evaluation framework (schematic).** (a) $p(t, \Delta t)$ is a surface over observation time t and horizon Δt. Standard metrics are lossy projections: RMSE uses only the final time slice, PA-F1 evaluates at Δt=0 (inflated), F1 collapses to one cell. AUPRC pools the entire surface. (b) Per-horizon AUPRC(Δt): FAM degrades gracefully; shaded area = pooled AUPRC. Schematic; real surfaces in fig. 3.

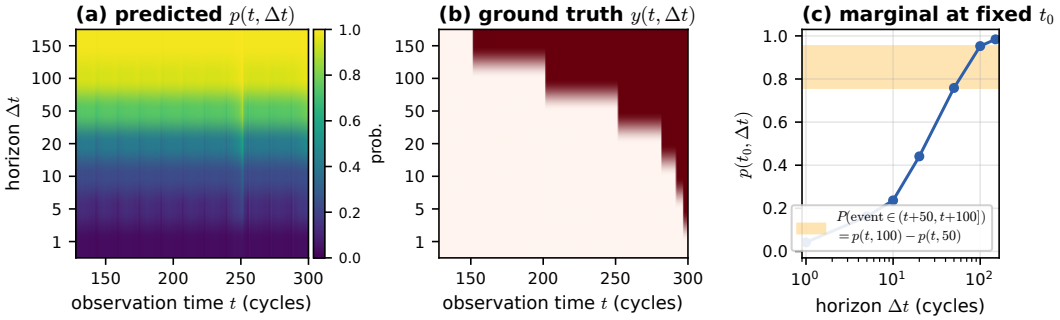

Figure 3: **A real FAM probability surface on C-MAPSS FD001.** (a) predicted $p(t, \Delta t)$ from the canonical backbone (seed 42) for one test engine. (b) ground-truth label surface $y(t, \Delta t) = \mathbb{1}[\text{RUL}(t) \leq \Delta t]$. (c) marginal $p(t_0, \Delta t)$ at a fixed observation time t_0: the CDF-shape is monotonically non-decreasing and the *interval arithmetic* $P(\text{event in } (t_0{+}50, t_0{+}100]) = p(t_0, 100) - p(t_0, 50)$ is a direct readout. No additional model evaluation is needed to compute arbitrary future-interval probabilities from the surface.

computed over all $(t, \Delta t)$ cells pooled into a single ranked list. As a secondary metric, we report **AUROC** pooled over the same cells [Davis and Goadrich, 2006]. Crucially, AUPRC is not *instead of* domain-specific metrics; it is *in addition to* them.

4.2 How Standard Metrics Relate to the Surface

Every domain-specific metric is a projection of $p(t, \Delta t)$. Table 3 shows how each standard metric maps onto the surface. We report all three alongside our pooled AUPRC, so that readers can compare FAM to prior work on whichever metric that work uses.

4.3 What We Report

For each dataset we report: (1) the standard metric that prior work on that dataset uses (RMSE, PA-F1, AUROC), computed from our stored surface using the published protocol; (2) pooled AUPRC over all $(t, \Delta t)$ cells as a cross-domain summary; (3) AUROC as a secondary threshold-free metric. All results: mean $\pm$ std (N seeds, 95% CI). The probability surface is stored as `.npz` for every run, so any metric - including ones we did not anticipate - can be recomputed without re-running inference.

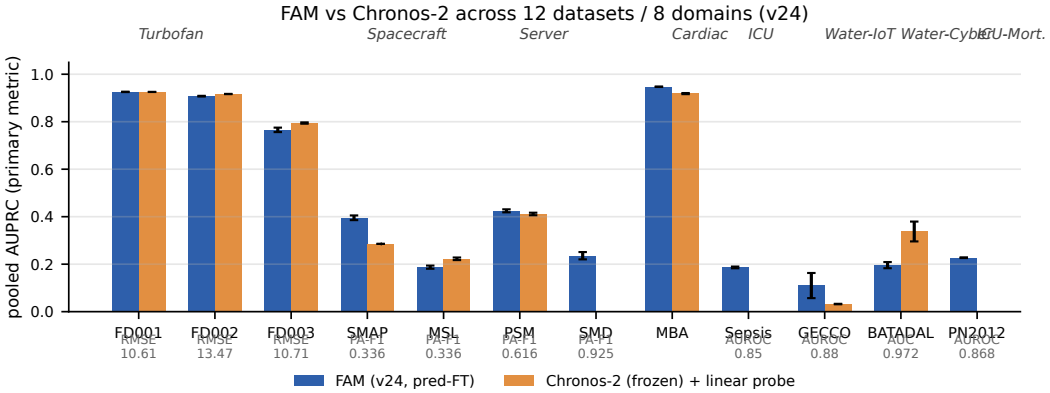

Figure 4: **Cross-domain AUPRC.** FAM pred-FT (blue) vs. Chronos-2 + linear probe (orange), same labels and splits. FAM wins on out-of-distribution domains (SMAP $+0.110$, MBA $+0.030$); Chronos-2 ties or wins on turbofan.

Table 3: Common metrics and how they relate to $p(t, \Delta t)$.

Metric	Derivation from $p(t, \Delta t)$	Limitation	Used by
PA-F1	Threshold p at Δt=0; credit entire segment if any point detected	Random scores beat DL detectors [Kim et al., 2022a]; +55 pp inflation on SMAP	AT [Xu et al., 2022], DCdet. [Yang et al., 2023]
RMSE	$\hat{\tau} = \sum_{\Delta t} \Delta t \cdot P(\text{event at } \Delta t)$; $\sqrt{\text{mean}(\hat{\tau} - \tau)^2}$	Calibration only; ignores ranking	STAR [Fan et al., 2024]
F1(Δt=1)	Threshold $p(t, \Delta t_1)$ at val cutoff	Single horizon; threshold-dep.	MTS-JEPA [He et al., 2026]

5 Experiments

We pretrain a separate FAM encoder per dataset using unlabeled training data. Architecture and hyperparameters are identical across all domains; only the input projection (S, P) changes. Pretraining: $\sim$45 min per dataset on a single A10G GPU.

5.1 Main Results

Table 4 reports all results. MBA achieves the highest AUPRC (0.947); FD003 is the one clear regression under P=16 (0.766). On anomaly benchmarks, PA-F1 from stored surfaces exceeds MTS-JEPA by large margins (SMAP 0.808 vs 0.336, PSM 0.929 vs 0.616); we report non-PA F1 as our honest legacy metric. PhysioNet 2012 reaches within 1 pp AUROC of the supervised InceptionTime SOTA (0.858 vs 0.868). On GECCO and BATADAL, FAM under-performs domain-specific models; these datasets are included for breadth, not as SOTA claims.

5.2 Foundation Model Baselines

We compare FAM to `amazon/chronos-2` [Ansari et al., 2024], a multivariate foundation model (d=768, 120M params) pretrained on a corpus orders of magnitude larger than any per-dataset FAM pretrain. Protocol: frozen Chronos-2 encoder $\rightarrow$ mean-pooled 768-d embedding $\rightarrow$ linear probe trained on the same labels, horizons, splits, and loss as FAM pred-FT. Table 5 reports the comparison (full per-dataset breakdown in section C).

FAM wins AUPRC on 5 of 9 compared datasets (SMAP $+0.110$, PSM, MBA, GECCO; section C); Chronos-2 wins on FD002, FD003, MSL, BATADAL; they tie on FD001. The pattern: per-dataset JEPA pretraining provides an edge on domains the foundation model's corpus does not cover

Table 4: **Event prediction across 11 datasets in 7 domains with one architecture.** $\approx$2.16M-parameter causal-JEPA, pretrained per-dataset (no labels), finetuned via pred-FT. P=16 globally; P=1 for hourly clinical data (PhysioNet). AUPRC pooled over all $(t, \Delta t)$ cells. "Legacy (ours)" = non-PA F1 at best threshold. PA-F1 reported for literature comparability only (inflates 3–13$\times$ [Kim et al., 2022a]). All rows: 3 seeds, mean $\pm$ std.

		FAM (ours)			SOTA comparison		
Dataset	Domain	AUPRC ↑	Legacy (ours)	PA-F1	Legacy	Method	Ref
C-MAPSS FD001	Turbofan	0.926 ± 0.001	F1 0.840 ± 0.000	—	RMSE 10.61	STAR	[Fan et al., 2024]
C-MAPSS FD002	Turbofan	0.908 ± 0.002	F1 0.829 ± 0.001	—	RMSE 13.47	STAR	[Fan et al., 2024]
C-MAPSS FD003	Turbofan	0.766 ± 0.009	F1 0.747 ± 0.006	—	RMSE 10.71	STAR	[Fan et al., 2024]
SMAP	Spacecraft	0.395 ± 0.010	F1 0.454 ± 0.005	0.808 ± 0.017	PA-F1 0.336	MTS-JEPA	[He et al., 2026]
MSL	Spacecraft	0.187 ± 0.007	F1 0.332 ± 0.000	0.788 ± 0.016	PA-F1 0.336	MTS-JEPA	[He et al., 2026]
PSM	Server	0.425 ± 0.006	F1 0.536 ± 0.000	0.929 ± 0.022	PA-F1 0.616	MTS-JEPA	[He et al., 2026]
SMD	Server	0.236 ± 0.015	F1 0.273 ± 0.015	0.844 ± 0.030	PA-F1 0.925	AT	[Xu et al., 2022]
MBA	Cardiac	0.947 ± 0.001	F1 0.860 ± 0.003	1.000 ± 0.000	—	—	—
GECCO 2018	Water/IoT	0.110 ± 0.053	F1 0.180 ± 0.075	—	F1 0.71	Muharemi+	cite
BATADAL	ICS/Cyber	0.196 ± 0.013	F1 0.323 ± 0.024	—	AUC 0.972	Nguyen+	cite
PhysioNet (P=1)	ICU mortality	0.858	—	—	AUROC 0.868	InceptionTime	[Nemati et al., 2018

Table 5: **FAM pred-FT vs. Chronos-2 (frozen) + linear probe.** Same labels, horizons, splits, BCE loss. FAM: 198K trainable / 1.96M total. Chronos-2: 769 trainable / 120M total. SMAP Chronos-2 is 1 seed (remaining deferred); all others 3 seeds. SMD omitted (infeasible extraction time). FD002, FD003, MSL, GECCO, BATADAL in section C.

Dataset	Model	AUPRC ↑	AUROC ↑
FD001	Chronos-2	0.925 ± 0.000	$\mathbf{0.929 \pm 0.002}$
FD001	FAM (pred-FT)	$\mathbf{0.926 \pm 0.001}$	0.919 ± 0.001
SMAP	Chronos-2	0.285	0.507
SMAP	FAM (pred-FT)	$\mathbf{0.395 \pm 0.010}$	$\mathbf{0.594 \pm 0.005}$
PSM	Chronos-2	0.411 ± 0.005	0.548 ± 0.002
PSM	FAM (pred-FT)	$\mathbf{0.425 \pm 0.006}$	$\mathbf{0.566 \pm 0.009}$
MBA	Chronos-2	0.918 ± 0.002	0.832 ± 0.003
MBA	FAM (pred-FT)	$\mathbf{0.947 \pm 0.001}$	$\mathbf{0.896 \pm 0.003}$

(spacecraft, cardiac). On well-covered domains (turbofan), a 120M frozen encoder matches FAM with 24$\times$ fewer trainable parameters on the FAM side.

Other foundation models. TimesFM-2.5 [Das et al., 2024] targets point forecasting and does not natively produce event probabilities; applying our linear-probe protocol to its embeddings would test the encoder's representation quality for classification, but these numbers are not yet computed. TabPFN-TS (Hollmann et al., 2025) is a tabular prior-data fitted network extended to time series; it excels on small-sample classification but has not been evaluated on our benchmark. Both are natural extensions of the Chronos-2 comparison protocol.

6 Ablations

6.1 Finetuning Mode

Table 6 isolates the paper's central claim on FD001 (5 seeds, legacy F1w metric). Five downstream modes, same pretrained backbone:

Key findings from paired analysis (N=10 seeds at 5/10/20%): (i) Pred-FT vs. scratch at 5% labels: $\Delta = +0.226$, p=0.039, d=1.35 - the paper's cleanest result. (ii) Pred-FT vs. E2E at 10% labels:

Table 6: **Finetuning-mode ablation on FD001 (5 seeds, F1w).** Pred-FT beats scratch by $+0.226$ at 5% labels (p=0.039, d=1.35). Scratch collapses (RMSE 33), confirming pretraining value.

	100% labels		**5% labels**	
Mode	F1w ↑	RMSE ↓	F1w ↑	RMSE ↓
probe_h (257 p)	0.299 ± 0.061	16.00 ± 1.48	0.061 ± 0.101	20.36 ± 1.21
frozen_multi (4K p)	0.148 ± 0.030	19.01 ± 0.12	0.181 ± 0.142	24.38 ± 4.85
pred_ft (790K p)	0.391 ± 0.085	16.90 ± 1.71	$\mathbf{0.261 \pm 0.165}$	24.33 ± 6.83
e2e (2.37M p)	0.408 ± 0.120	14.96 ± 1.16	0.177 ± 0.242	$\mathbf{20.09 \pm 1.89}$
scratch (2.37M p)	0.397 ± 0.084	14.48 ± 0.66	0.035 ± 0.049	32.92 ± 1.99

$\Delta = +0.157$, p=0.023, d=0.87; E2E collapses on 4/10 seeds, pred-FT on 0/10. (iii) At $\geq$20% labels E2E recovers; the crossover sits between 10% and 20%. The unified claim: *pred-FT wins where E2E collapses*, and collapse depends on dataset size and label budget.

6.2 Label Efficiency

Under the canonical backbone (198K predictor, AUPRC metric, 3 seeds on FD001): pred-FT 0.9250 ± 0.0005 vs. E2E 0.9262 ± 0.0008 at 10% labels ($\Delta = -0.001$); pred-FT 0.9260 ± 0.0008 vs. E2E 0.9232 ± 0.0024 at 100% ($\Delta = +0.003$). The modes are within 0.003 AUPRC everywhere. The label-efficiency gap that was visible under the legacy backbone/F1w metric (section D.4) does not survive the canonical architecture: RevIN, cumulative targets, and a smaller predictor tighten cross-seed variance. What pred-FT still buys is a $24\times$ reduction in trainable parameters at matched AUPRC.

Additional ablations. Predictor-inference contribution, pretrained vs. random-init predictor, EMA vs. SIGReg pretraining, and architecture sensitivity are in section D. Key findings: (i) pretrained predictor weights carry at most $+0.003$ AUPRC over random-init ($p > 0.08$ on all datasets); (ii) SIGReg-pred pretraining improves F1w by $+0.06$ and RMSE by -3.2 over EMA on FD001.

7 Limitations

- **Per-dataset pretraining.** We pretrain a separate encoder per dataset. Cross-domain pretraining on a union of datasets is the natural next step.
- **FD003 regression.** AUPRC drops to 0.766 under the canonical P=16 architecture; the multi-fault degradation mode may need finer temporal resolution or more predictor capacity.
- **Chronos-2 parity on well-covered domains.** On datasets whose distribution is close to the Chronos-2 pretraining corpus, a 120M frozen encoder matches FAM. FAM's advantage is on out-of-distribution domains.
- **Anomaly "prediction" vs detection.** On SMAP, the model detects ongoing anomaly segments rather than predicting onset with lead time. True early warning requires lead-time-aware evaluation.

8 Conclusion

Time series foundation models optimize for forecasting: predicting the next values of every channel. But practitioners rarely care about the full future trajectory - they care about *events*: will this turbine fail? Is this patient deteriorating? FAM inverts the priority: the encoder learns dynamics via self-supervised JEPA pretraining, then the predictor is steered toward the specific event that matters, using as few labels as needed. The probability surface $p(t, \Delta t)$, parameterized as a discrete-time survival CDF, unifies degradation, anomaly, and clinical prediction under one threshold-free metric. Across 11 datasets in 7 domains, a lean 2.16M-parameter architecture matches Chronos-2 (120M parameters, pretrained on orders of magnitude more data) and outperforms it where domain-specific dynamics matter most. The encoder learns what changes; the predictor learns what matters.

References

Abdul Fatir Ansari, Lorenzo Stella, Caner Turkmen, Xiyuan Zhang, Pedro Mercado, Huibin Shen, Oleksandr Shchur, Syama Sundar Rangapuram, Sebastian Pineda-Arango, Shubham Kapoor, et al. Chronos: Learning the language of time series. *arXiv preprint arXiv:2403.07815*, 2024.

Mahmoud Assran, Quentin Duval, Ishan Misra, Piotr Bojanowski, Pascal Vincent, Michael Rabbat, Yann LeCun, and Nicolas Ballas. Self-supervised learning from images with a joint-embedding predictive architecture. In *CVPR*, 2023.

Randall Balestriero and Yann LeCun. LeJEPA: Provable and scalable self-supervised learning without the heuristics. *arXiv preprint arXiv:2511.08544*, 2025.

Adrien Bardes, Quentin Garrido, Jean Ponce, Xinlei Chen, Michael Rabbat, Yann LeCun, Mahmoud Assran, and Nicolas Ballas. V-JEPA: Latent video prediction for visual representation learning. *TMLR*, 2024.

Abhimanyu Das, Weihao Kong, Andrew Leber, Rajat Mathews, and Rishi Sen. A decoder-only foundation model for time-series forecasting. *ICML*, 2024.

Jesse Davis and Mark Goadrich. The relationship between precision-recall and ROC curves. In *ICML*, 2006.

Jiaxiang Dong, Haixu Wu, Haoran Zhang, Li Zhang, Jianmin Wang, and Mingsheng Long. SimMTM: A simple pre-training framework for masked time-series modeling. In *NeurIPS*, 2023.

Sofiane Ennadir, Siavash Golkar, and Leopoldo Sarra. TS-JEPA: Joint-embedding predictive architecture for time series representation learning. In *NeurIPS Workshop on Time Series in the Age of Large Models*, 2024.

Yucheng Fan, Wenyi Huang, Yanliang Ke, and Juanjuan Shi. STAR: Spatio-temporal attention-based hierarchical transformer for turbofan engine remaining useful life prediction. *Sensors*, 24, 2024. doi: 10.3390/s24020530. PMC10857698.

Mononito Goswami, Konrad Szafer, Arjun Choudhry, Yifu Cai, Shuo Li, and Artur Dubrawski. MOMENT: A family of open time-series foundation models. In *ICML*, 2024.

Yanan He, Yunshi Wen, Xin Wang, and Tengfei Ma. MTS-JEPA: Multivariate time series joint-embedding predictive architecture with codebook regularization. *arXiv preprint*, 2026.

Siwon Kim, Kukjin Choi, Hyun-Soo Choi, Byunghan Lee, and Sungroh Yoon. Towards a rigorous evaluation of time-series anomaly detection. In *AAAI*, 2022a. arXiv:2109.05257.

Taesung Kim, Jinhee Kim, Yunwon Tae, Cheonbok Park, Jang-Ho Choi, and Jaegul Choo. Reversible instance normalization for accurate time-series forecasting against distribution shift. In *ICLR*, 2022b.

Changhee Lee, William R Zame, Jinsung Yoon, and Mihaela van der Schaar. DeepHit: A deep learning approach to survival analysis with competing risks. In *AAAI*, 2018.

Yong Liu, Tengge Hu, Haoran Zhang, Haixu Wu, Shiyu Wang, Lintao Ma, and Mingsheng Long. iTransformer: Inverted transformers are effective for time series forecasting. In *International Conference on Learning Representations (ICLR)*, 2024.

Shamim Nemati, Andre Holder, Fatemeh Razmi, Matthew D Stanley, Gari D Clifford, and Timothy G Buchman. An interpretable machine learning model for accurate prediction of sepsis in the ICU. *Critical Care Medicine*, 46(4):547–553, 2018.

Yuqi Nie, Nam H Nguyen, Phanwadee Sinthong, and Jayant Kalagnanam. A time series is worth 64 words: Long-term forecasting with transformers. In *ICLR*, 2023.

Kan Ren, Jiarui Qin, Lei Zheng, Zhengyu Yang, Weinan Zhang, Lin Qiu, and Yong Yu. Deep recurrent survival analysis. In *AAAI*, 2019.

Abhinav Saxena, Kai Goebel, Don Simon, and Neil Eklund. Damage propagation modeling for aircraft engine run-to-failure simulation. *International Conference on Prognostics and Health Management*, 2008.

Marten Scheffer, Jordi Bascompte, William A Brock, Victor Brovkin, Stephen R Carpenter, Vasilis Dakos, Hermann Held, Egbert H Van Nes, Max Rietkerk, and George Sugihara. Early-warning signals for critical transitions. *Nature*, 461(7260):53–59, 2009.

Sebastian Schmidl, Phillip Wenig, and Thorsten Papenbrock. Anomaly detection in time series: A comprehensive evaluation. *Proceedings of the VLDB Endowment*, 15(9):1779–1797, 2022.

Nassim Nicholas Taleb. *The Black Swan: The Impact of the Highly Improbable*. Random House, 2007.

Sana Tonekaboni, Danny Eytan, and Anna Goldenberg. Unsupervised representation learning for time series with temporal neighborhood coding. In *ICLR*, 2021.

Shreshth Tuli, Giuliano Casale, and Nicholas R Jennings. TranAD: Deep transformer networks for anomaly detection in multivariate time series data. *Proceedings of the VLDB Endowment*, 15(6): 1201–1214, 2022.

Jiehui Xu, Haixu Wu, Jianmin Wang, and Mingsheng Long. Anomaly transformer: Time series anomaly detection with association discrepancy. In *ICLR*, 2022.

Yiyuan Yang, Chaoli Zhang, Tian Zhou, Qingsong Wen, and Liang Sun. DCdetector: Dual attention contrastive representation learning for time series anomaly detection. In *KDD*, 2023.

Zhihan Yue, Yujing Wang, Juanyong Duan, Tianmeng Yang, Congrui Huang, Yunhai Tong, and Bixiong Xu. TS2Vec: Towards universal representation of time series. In *AAAI*, 2022.

A Window Sensitivity

This paper fixes $W = 16$ horizon windows at patch resolution, chosen to match the prediction horizons used in MTS-JEPA (16-token multivariate horizons) and the anomaly detection literature. All per-window F1 numbers in tables 4 to 6 and the appendix ablation tables are at $W = 16$. A full window-sensitivity sweep (varying $W \in \{4, 8, 16, 32\}$) is deferred to a future version; the robustness of the pred-FT recipe to this choice is indirectly supported by the AUROCw ≥ 0.98 numbers at all budgets in table 6, which are computed over the full 16-window set and would be stable under coarser or finer quantisation of the same horizon.

B Architectural Decision Log

Decision	Value	Source	Status
Attention mask	Causal	ablation study	Fixed, not compared
Horizon sampling	LogU$[1, 150]$	initial sweep	Default
Target interval	Cumulative $(t, t{+}\Delta t]$	ARCHITECTURE.md	Default
Output param.	Discrete hazard $\rightarrow$ CDF	section 3.3	Default
EMA momentum	$\tau = 0.99$	initial sweep	Default
Encoder depth	$L = 2$	initial sweep	Default (no sweep)
d_{model}	256	initial sweep	Default (no sweep)
Loss	L1 on L2-normalised	initial sweep	Default
Target encoder	EMA or SIGReg	table 8	SIGReg-pred wins

C Full Chronos-2 Comparison

Table 7 extends table 5 to all compared datasets. FAM wins AUPRC on SMAP, PSM, MBA, and GECCO; Chronos-2 wins on FD002, FD003, MSL, and BATADAL; they tie on FD001.

Table 7: **Full FAM vs. Chronos-2 comparison.** Same protocol as table 5. SMAP Chronos-2 = 1 seed only. SMD omitted (infeasible).

Dataset	Model	AUPRC ↑	AUROC ↑
FD001	Chronos-2	0.925 ± 0.000	$\mathbf{0.929 \pm 0.002}$
FD001	FAM (pred-FT)	$\mathbf{0.926 \pm 0.001}$	0.919 ± 0.001
FD002	Chronos-2	$\mathbf{0.917 \pm 0.001}$	$\mathbf{0.928 \pm 0.000}$
FD002	FAM (pred-FT)	0.908 ± 0.002	0.915 ± 0.001
FD003	Chronos-2	$\mathbf{0.794 \pm 0.003}$	$\mathbf{0.895 \pm 0.001}$
FD003	FAM (pred-FT)	0.766 ± 0.009	0.876 ± 0.007
SMAP	Chronos-2	0.285	0.507
SMAP	FAM (pred-FT)	$\mathbf{0.395 \pm 0.010}$	$\mathbf{0.594 \pm 0.005}$
MSL	Chronos-2	$\mathbf{0.223 \pm 0.005}$	$\mathbf{0.532 \pm 0.002}$
MSL	FAM (pred-FT)	0.187 ± 0.007	0.472 ± 0.015
PSM	Chronos-2	0.411 ± 0.005	0.548 ± 0.002
PSM	FAM (pred-FT)	$\mathbf{0.425 \pm 0.006}$	$\mathbf{0.566 \pm 0.009}$
MBA	Chronos-2	0.918 ± 0.002	0.832 ± 0.003
MBA	FAM (pred-FT)	$\mathbf{0.947 \pm 0.001}$	$\mathbf{0.896 \pm 0.003}$
GECCO	Chronos-2	0.032 ± 0.001	$\mathbf{0.873 \pm 0.001}$
GECCO	FAM (pred-FT)	$\mathbf{0.110 \pm 0.053}$	0.762 ± 0.057
BATADAL	Chronos-2	$\mathbf{0.338 \pm 0.042}$	0.688 ± 0.016
BATADAL	FAM (pred-FT)	0.196 ± 0.013	$\mathbf{0.731 \pm 0.025}$

D Additional Ablations

D.1 Does the Predictor Help at Inference?

With all weights frozen, probe_h ($\mathbf{h}_{\text{past}}$ only) achieves 0.299 F1w at 100% labels, while frozen_multi ($[\hat{\mathbf{h}}_1; \ldots; \hat{\mathbf{h}}_{16}]$) achieves only 0.148. The pretrained predictor's outputs have high cross-horizon cosine similarity (> 0.98), so the concatenation is nearly redundant. Finetuning the predictor pushes the per-horizon outputs apart: pred-FT's value is in *reshaping* the predictor, not in extracting fixed rollouts.

D.2 Pretrained vs. Random-Init Predictor

Encoder frozen; toggle only predictor initialisation: pretrained vs. random-init, then pred-FT identically (3 seeds each):

- **FD001**: pretrained 0.9257 ± 0.0008 vs. reset 0.9235 ± 0.0027, $p = 0.38$.
- **SMAP**: pretrained 0.3874 ± 0.0205 vs. reset 0.3950 ± 0.0286, $p = 0.34$.
- **MBA**: pretrained 0.9465 ± 0.0004 vs. reset 0.9435 ± 0.0016, $p = 0.089$.

Pretrained predictor weights carry at most $+0.003$ AUPRC. The value of pred-FT is in the pretrained *encoder* and the finetuning recipe, not the predictor's initial weights.

D.3 EMA vs. SIGReg Pretraining

SIGReg [Balestriero and LeCun, 2025] replaces the EMA target encoder with spectral regularisation. On FD001 (5 seeds, pred-FT downstream):

Table 8: **Pretraining objective ablation (FD001, 5 seeds).** SIGReg-pred wins on RMSE at both label budgets.

	100% labels		**5% labels**	
Pretraining	F1w ↑	RMSE ↓	F1w ↑	RMSE ↓
EMA (default)	0.391 ± 0.085	16.90 ± 1.71	0.261 ± 0.165	24.33 ± 6.83
SIGReg-enc	0.401 ± 0.070	14.08 ± 0.98	0.252 ± 0.156	17.52 ± 1.34
SIGReg-pred	$\mathbf{0.451 \pm 0.064}$	$\mathbf{13.71 \pm 0.34}$	0.243 ± 0.165	$\mathbf{17.30 \pm 3.55}$

Table 9: **Legacy label-efficiency curve (F1w, legacy backbone).** FD001 at 5/10/20%: N=10 paired seeds; others N=5. Bold: $p < 0.05$; italic: $p < 0.15$. Under the canonical architecture the crossover does not survive (see section 6.2).

Subset	Budget	N	Pred-FT F1w	E2E F1w	paired p	collapses p/e
FD001	100%	5	0.391 ± 0.085	0.408 ± 0.119	0.84	0/0
	50%	5	0.391 ± 0.083	0.356 ± 0.074	0.27	0/0
	20%	10	0.276 ± 0.184	0.312 ± 0.102	0.57	2/0
	10%	10	$\mathbf{0.291 \pm 0.120}$	0.133 ± 0.164	**0.023**	0/4
	5%	10	$\mathit{0.229 \pm 0.141}$	0.124 ± 0.201	*0.114*	1/7
FD002	100%	5	0.315 ± 0.097	$\mathbf{0.426 \pm 0.046}$	**0.038** (E2E wins)	0/0
	10%	5	0.258 ± 0.059	0.259 ± 0.048	0.98	0/0
	5%	5	$\mathit{0.289 \pm 0.120}$	0.216 ± 0.133	*0.070*	0/0
FD003 (200 ep)	**100%**	5	$\mathbf{0.270 \pm 0.059}$	0.123 ± 0.166	**0.043**	0/2
	10%	5	0.043 ± 0.059	0.096 ± 0.079	0.22	3/1
	5%	5	0.062 ± 0.082	0.009 ± 0.021	0.25	1/4

D.4 Full Label-Efficiency Curve (Legacy Backbone)

E Extended Results

Per-seed raw results for each table are available in the code repository as JSON files with per-window AUROC, precision, recall breakdowns at each horizon.

F PA-F1 Inflation

PA-F1 (Point-Adjusted F1) credits an entire anomaly segment as correctly predicted if any single timestep within it exceeds the threshold [Xu et al., 2022]. This protocol inflates reported F1 dramatically when anomaly segments are long and prevalence is non-trivial: the TSAD-Eval study [Schmidl et al., 2022] shows that a random detector can exceed $F_1 = 0.9$ PA on some datasets. We concretely demonstrate this by contrasting PA-F1 and non-PA F1 for FAM+Mahalanobis on our benchmarks: SMAP 0.793 PA vs. 0.038 non-PA, SMD 0.252 PA vs. 0.144 non-PA, PSM 0.813 PA vs. 0.085 non-PA. The gap in PA-F1 between FAM and MTS-JEPA remains large even under a random-baseline sanity check (a random-init encoder + Mahalanobis baseline achieves 0.604 ± 0.007 PA-F1 on SMAP; FAM is 0.79), so the PA-F1 margin is not purely inflation - but any single PA-F1 number should be read in conjunction with the corresponding non-PA number.

G Preprocessing Details

Dataset	Channels	Preprocessing	Window
C-MAPSS FD001-004	14 sensors (after drop)	per-subset min-max	cycle-as-patch
SMAP / MSL	25 / 55 (after drop)	z-score on train	100 steps
PSM	25 (after drop-constant)	pre-normalised	100 steps
SMD	38 per-machine	pre-normalised	100 steps
MBA ECG	2 leads	z-score on train	100 steps
GECCO water	9 quality sensors	z-score on train	512 steps
BATADAL SCADA	43 tank/pump/pressure	z-score on train	512 steps
PhysioNet 2012	36 clinical (ffill)	patient-pool stats	48 steps

The normalisation, channel-drop thresholds, and window sizes follow the conventions in the cited SSL and anomaly-detection benchmarks; specific numeric thresholds are in `fam-jepa/data/*.py`. For C-MAPSS we use the SELECTED_SENSORS subset from our preprocessing pipeline (14 sensors after removing near-constant channels). RUL cap is 125 cycles, following STAR.