FAM: A Self-Supervised Forecast-Anything Model for Multivariate Time Series Events

Jonas Petersen[1,2,*], **Gian-Alessandro Lombardi**[1], **Riccardo Maggioni**[1], **Camilla Mazzoleni**[1], **Federico Martelli**[1,2], **Philipp Petersen**[3]

[1]Forgis [2]ETH Zürich [3]University of Vienna

Abstract

Predicting events in multivariate time series (loss of a turbine blade, an anomalous server spike, a cardiac arrhythmia) demands methods that generalise across event types and domains, especially when labels are scarce. Existing approaches silo each event type into a separate supervised model and evaluate with incomparable, domain-specific metrics. We introduce FAM (Forecast-Anything Model), built on two ideas. First, *predictor finetuning*: a causal encoder pretrained via a Joint Embedding Predictive Architecture (JEPA) learns to predict future representations in latent space with no labels; downstream, we freeze the encoder and finetune only the horizon-conditioned predictor ($\sim 9\%$ of parameters) for each event type. Second, we evaluate all tasks through a probability surface $p(t, \Delta t)$ - event probability as a function of observation time and prediction horizon Δt - parameterized as a discrete-time survival CDF that is monotonically non-decreasing by construction. Across 11 datasets in 7 domains, a single 2.16M-parameter architecture with no dataset-specific hyperparameters outperforms Chronos-2 (a 120M-parameter foundation model) on 7 of 8 comparable datasets when using identical downstream heads (198K trainable parameters each), demonstrating that domain-specific JEPA pretraining yields stronger event-prediction representations than value-forecasting pretraining at 56$\times$ lower total model cost. At 10% of labels, FAM retains $\geq 98\%$ of its full-label performance on lifecycle datasets; at 2% (just 2 engines out of 85), it retains 92%. Code and stored probability surfaces at `https://github.com/Forgis-Research/IndustrialJEPA`.

1 Introduction

A turbine blade cracks after 12,000 flight hours. A satellite sensor drifts silently for 48 hours. A patient's ECG shifts six hours before cardiac arrest. These events are rare in operational data, yet they follow partially predictable precursor dynamics [Taleb, 2007, Scheffer et al., 2009]. Current methods treat each event type as a separate supervised problem: RUL models [Fan et al., 2024] never see anomaly benchmarks; anomaly detectors [Xu et al., 2022, He et al., 2026] never predict time-to-failure.

Yet every event prediction task has the same structure: given observations up to time t, estimate $P(\text{event within } \Delta t)$ for each horizon Δt. The *encoder* that learns these dynamics does not need to know which event will matter downstream; it learns general temporal structure from unlabeled data. The *predictor*, finetuned with a small number of event labels, specialises the learned dynamics to the specific event of interest: a mechanical failure, a cardiac arrhythmia, or a cyber-attack.

FAM. The key design choice is *what* to predict. Forecasting models, including foundation models like Chronos [Ansari et al., 2024] and TimesFM [Das et al., 2024], optimise for reconstructing

*Correspondence: `jonas.petersen@forgis.com`.

40th Conference on Neural Information Processing Systems (NeurIPS 2026).

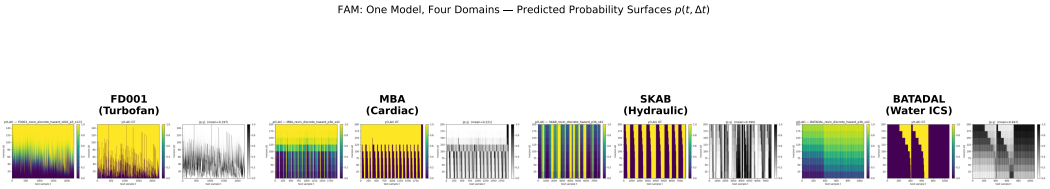

Figure 1: **One model, four domains.** Predicted event probability surfaces $p(t, \Delta t)$ from a single FAM architecture (2.16M params, no dataset-specific hyperparameters) across four domains. Each panel shows the 3-subplot diagnostic: (left) predicted p, (centre) ground-truth label surface y, (right) error $|p - y|$. From left to right: FD001 turbofan degradation (RUL), MBA cardiac arrhythmia, SKAB hydraulic anomaly, BATADAL water infrastructure cyber-attack. FAM learns domain-specific precursor dynamics purely from self-supervised JEPA pretraining; only the 198K-param predictor is finetuned with event labels.

future values, so their representations must retain every source of variation that affects the output: sensor noise, irrelevant oscillations, stochastic perturbations. JEPA [Assran et al., 2023] predicts future *representations* with no reconstruction obligation: the encoder is free to learn a latent space that retains what is predictable about the future and discards what is not. Unpredictable noise is compressed away by the representation bottleneck; predictable precursor dynamics, the signal that event prediction depends on, are preserved because the pretraining loss rewards their retention (section 3.3). We apply this to time series: a causal Transformer encodes observations up to t into $\mathbf{h}_t$; a horizon-conditioned predictor g_ϕ maps $(\mathbf{h}_t, \Delta t)$ to a predicted future representation, forcing the encoder to internalise dynamics at multiple timescales. Pretraining uses standard components (patches [Nie et al., 2023], instance normalisation [Kim et al., 2022b], causal attention, EMA target) and is self-supervised.

Core idea: predictor finetuning. After pretraining, every SSL method discards its prediction head and probes the encoder. We do the opposite: freeze the encoder, finetune the predictor. The predictor is a small horizon-conditioned MLP ($\sim 9\%$ of parameters) that, together with a per-horizon event head, is more expressive than a linear probe but far cheaper than end-to-end finetuning. The output is parameterized as a discrete-time survival CDF [Lee et al., 2018], guaranteeing that event probabilities are monotonically non-decreasing in the prediction horizon by construction.

Contributions.

1. **Predictor finetuning as the downstream recipe.** Freeze the encoder, finetune the predictor + head. This achieves the same AUPRC as end-to-end finetuning with $\sim 11\times$ fewer trainable parameters (198K vs. 2.16M) and tighter cross-seed variance at low label budgets (sections 6.1 and 6.2).
2. **Multi-domain event prediction under a unified metric.** One architecture across 11 datasets in 7 domains, evaluated through the same probability surface $p(t, \Delta t)$ scored by AUPRC, threshold-free and robust to class imbalance (sections 4 and 5).

2 Related Work

Self-supervised learning for time series. Contrastive methods (TS2Vec [Yue et al., 2022], TNC [Tonekaboni et al., 2021]) learn by contrasting pairs. Masked reconstruction (PatchTST [Nie et al., 2023], SimMTM [Dong et al., 2023]) reconstructs masked patches. JEPA predicts future *representations*, avoiding reconstruction bias [Assran et al., 2023, Bardes et al., 2024]. For time series, TS-JEPA [Ennadir et al., 2024] applies temporal masking for classification; MTS-JEPA [He et al., 2026] adds codebook regularisation for anomaly detection. All of these discard their pretraining head at inference and probe only the encoder. We keep the predictor and show it carries event-relevant signal.

Foundation models for time series. Chronos [Ansari et al., 2024], TimesFM [Das et al., 2024], and MOMENT [Goswami et al., 2024] pretrain on large-scale corpora for generic value forecasting (predicting next values). FAM targets a different output: event probabilities rather than future channel

values. The encoder is mid-scale ($\approx$2.16M) and pretrained per-dataset rather than on a massive corpus; what transfers across domains is the *recipe* (architecture + predictor finetuning), not the weights. We benchmark against `amazon/chronos-2` (appendix D).

Prognostics and anomaly prediction. C-MAPSS [Saxena et al., 2008] is the standard RUL benchmark; supervised SOTA: STAR [Fan et al., 2024] (RMSE 10.61). Anomaly prediction methods (Anomaly Transformer [Xu et al., 2022], DCdetector [Yang et al., 2023], TranAD [Tuli et al., 2022]) report point-adjusted F1 (PA-F1), which inflates scores by crediting entire segments from a single detection [Schmidl et al., 2022]. We replace these incomparable metrics with AUPRC pooled over the probability surface (section 4).

Channel strategies. PatchTST [Nie et al., 2023] showed channel-independent processing often wins; iTransformer [Liu et al., 2024] showed variate-as-token wins on high-correlation data. Our default is channel-fusion (linear projection); we ablate against sensor-as-token (section 6).

3 Method

3.1 Preprocessing

We follow standard practice for multi-domain time series [Nie et al., 2023, Ansari et al., 2024, Goswami et al., 2024]: patch tokenisation with per-context instance normalisation.

Patches. P=16 consecutive raw samples form one token. This is fixed for all datasets with sufficient temporal resolution (sample rate $\geq$ 1/min); for coarsely sampled data (PhysioNet at 1/hour), we use P=1 so that the causal transformer receives enough tokens. Table 1 lists the resulting token counts. The encoder requires a minimum context of $\sim$128 timesteps ($\sim$8 tokens) for self-attention to be effective. The context length is variable at both training and inference: for prognostic datasets with a clear lifecycle start (C-MAPSS), we feed the full history; for continuous monitoring streams (SMAP, PSM), we use a sliding window of 512 steps.

Instance normalisation. Per context, per channel: subtract the context mean, divide by the context standard deviation. This removes distribution shift across machines and operating conditions without requiring training-set statistics at inference.

Projection. A linear layer $\mathbf{W} \in \mathbb{R}^{d\times(C\cdot P)}$ maps each patch to a d-dimensional token (d=256; C = number of channels, P = patch length). Sinusoidal positional encodings are added.

Table 1: Dataset overview. P=16 for all datasets with sufficient temporal resolution; P=1 for hourly clinical data (PhysioNet) where stays are too short for coarser tokenisation.

Dataset	Sensors	Rate	Patch P	Typical context
C-MAPSS FD001-004	14	1/cycle	16	full history (8–23 tokens)
SMAP / MSL	25 / 55	1 Hz	16	sliding 512 steps (32 tokens)
PSM	25	1/min	16	sliding 512 steps (32 tokens)
SMD	38	1/min	16	sliding 512 steps (32 tokens)
MBA (ECG)	2	275 Hz	16	sliding 512 steps (32 tokens)
GECCO (water)	9	1/min	16	sliding 512 steps (32 tokens)
BATADAL (ICS)	43	1/hour	16	sliding 512 steps (32 tokens)
PhysioNet 2012	36	1/hour	1	full stay (6–48 tokens)

3.2 Architecture

Context encoder f_θ: a causal Transformer (d=256, 2 layers, 4 heads). Given observations $\mathbf{x}_{\leq t}$, it produces a summary embedding:

$$\mathbf{h}_t = f_\theta(\mathbf{x}_{\leq t}) \in \mathbb{R}^d. \tag{1}$$

Predictor g_ϕ: a 2-layer MLP. Given $\mathbf{h}_t$ and a prediction horizon Δt, it produces a predicted embedding of the future interval $(t, t{+}\Delta t]$:

$$\hat{\mathbf{h}}_{(t,t+\Delta t]} = g_\phi(\mathbf{h}_t, \Delta t). \tag{2}$$

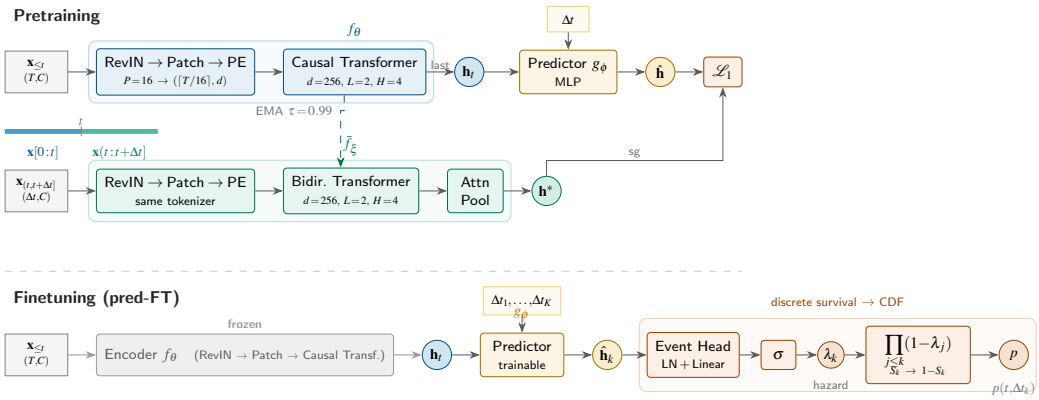

Figure 2: **FAM architecture.** *Top:* pretraining. The context encoder f_θ (causal) produces $\mathbf{h}_t$; the predictor g_ϕ maps $(\mathbf{h}_t, \Delta t)$ to $\hat{\mathbf{h}}$; the EMA target encoder $\bar{f}_\xi$ (bidirectional + attention pool) provides the L1 target $\mathbf{h}^*$ from the interval $\mathbf{x}_{(t,t+\Delta t]}$. *Bottom:* finetuning. The encoder is frozen; the predictor runs at K horizons; per-horizon hazard logits pass through sigmoid $\to$ conditional hazards $\lambda_k \to$ cumulative product $\to$ survival CDF $p(t, \Delta t_k)$, which is monotonically non-decreasing by construction.

During pretraining, $\Delta t \sim \text{LogU}[1, \Delta t_{\text{max}}]$ is sampled randomly, forcing the encoder to internalise dynamics at multiple timescales.

Target encoder $\bar{f}_\xi$: an EMA copy of f_θ (τ=0.99) that encodes the next Δt steps $\mathbf{x}_{(t,t+\Delta t]}$ bidirectionally with attention pooling $\to \mathbf{h}^*_{(t,t+\Delta t]} \in \mathbb{R}^d$. Crucially, the target interval starts immediately at t; there is no gap between context and target. The same interval is used for event prediction downstream (section 3.4). We also experiment with a curriculum variant that transitions from EMA to SIGReg spectral regularisation [Balestriero and LeCun, 2025] (which eliminates the target encoder entirely; see section 6).

Pretraining loss: $\mathcal{L} = \|\hat{\mathbf{h}}_{(t,t+\Delta t]} - \text{sg}(\mathbf{h}^*_{(t,t+\Delta t]})\|_1 + \lambda \cdot \text{var-reg}$, where sg denotes stop-gradient.

3.3 Theoretical Guarantees

We now formalise when JEPA pretraining retains event-relevant information. All proofs and assumptions are in appendix A.

Setup. Let $X_{\leq t}$ denote observations up to time t, and let $E_{t+\Delta t} \in \{0, 1\}$ indicate whether an event occurs in the interval $(t, t + \Delta t]$. The encoder produces $H_t = f_\theta(X_{\leq t}) \in \mathbb{R}^d$, and the target encoder produces $H^* = \bar{f}_\xi(X_{(t,t+\Delta t]}) \in \mathbb{R}^d$ from the future interval. We write $\hat{H} = g_\phi(H_t, \Delta t)$ for the predicted representation. We use $I(\cdot;\cdot)$ for mutual information and $H(\cdot)$ for entropy, following Cover and Thomas [2006].

Definition 1 (Predictive and event-relevant information)**.** *The* total predictive information *in H_t about the future interval is $I(H_t; X_{(t,t+\Delta t]})$. The* event-relevant information *captured by the target encoder is $I(H^*; E_{t+\Delta t})$. The* event-irrelevant *component of H^* is the residual $I(H^*; X_{(t,t+\Delta t]} \mid E_{t+\Delta t})$.*

Proposition 1 (Event-Information Retention)**.** *Suppose* (A1) *the event $E_{t+\Delta t}$ is conditionally independent of $X_{\leq t}$ given H^*,* (A2) *the pretraining loss satisfies $\mathbb{E}[\|\hat{H} - H^*\|_2^2] \leq \varepsilon$,* (A3) *the event posterior $\eta(h) = P(E_{t+\Delta t} = 1 \mid H^* = h)$ is L-Lipschitz, and* (A4) *the marginal event rate satisfies $p = P(E_{t+\Delta t} = 1) \in [\underline{p}, \overline{p}] \subset (0, 1)$. Then*

$$I(H_t;\, E_{t+\Delta t}) \;\geq\; I(H^*;\, E_{t+\Delta t}) \;-\; C_p\, L^2\, \varepsilon\,, \tag{3}$$

where $C_p = \big(2\,\underline{p}\,(1-\overline{p})\big)^{-1}$ depends only on the event-rate bounds.

Proof sketch. Since $\hat{H}$ is a deterministic function of $(H_t, \Delta t)$, the data processing inequality gives $I(H_t; E) \geq I(\hat{H}; E)$. Under A1, $P(E{=}1 \mid \hat{H}) = \mathbb{E}[\eta(H^*) \mid \hat{H}]$. A Jensen-gap argument on

the convex KL divergence, combined with the Lipschitz bound A3 and prediction error A2, yields $I(H^*; E) - I(\hat{H}; E) \leq C_p L^2 \varepsilon$. Full proof in appendix A. □

Corollary 2 (Precursor necessity)**.** *The bound* (3) *is non-vacuous (i.e. the right-hand side is positive) if and only if:*

(i) $I(H^*; E_{t+\Delta t}) > 0$*: the future interval contains event precursors that the target encoder captures;*
(ii) $\varepsilon < I(H^*; E_{t+\Delta t})/(C_p L^2)$*: the predictor approximates the target representation well enough;*
(iii) The encoder f_θ *has sufficient capacity to represent the precursors (implicit in A1).*

Connection to experiments. Proposition 2 directly explains our empirical findings. On C-MAPSS (section 5), degradation unfolds over hundreds of cycles, so $I(H^*; E_{t+\Delta t})$ is large and ε is driven small by pretraining, yielding strong downstream performance (h-AUROC ≥ 0.74). On CHB-MIT, seizure onset in scalp EEG has minimal precursors in a 16-second context, so $I(H^*; E_{t+\Delta t}) \approx 0$ regardless of ε: condition (i) fails. That predictor *weights* do not transfer (section 6.1) while the encoder does is consistent with the bound: the encoder preserves information (the $I(H_t; E_{t+\Delta t})$ term), but the predictor's pretraining codomain ($\mathbb{R}^d$ representations) differs from the downstream codomain ($[0, 1]$ event probabilities), so pretrained weights offer no inductive bias for the finetuning objective.

Label efficiency. When $I(H_t; E_{t+\Delta t})$ is large, very few labeled examples suffice to steer the predictor toward the event. Formally (see appendix A), fixing the encoder and optimising the head with n labeled samples, the expected excess risk is bounded by a *representation gap* term that depends only on $I(H_t; E_{t+\Delta t})$ plus a *statistical error* term $O(1/\sqrt{n})$. For C-MAPSS FD001, where $I(H_t; E_{t+\Delta t})$ is large, the statistical error term already falls below the representation gap by $n \approx 200$ windows. This is consistent with our empirical observation that FAM retains $\mathbf{92}\%$ of full-label h-AUROC using just 2 training engines out of 85 (2% labels; table 8).

3.4 Downstream: Freeze Encoder, Finetune Predictor

Given event labels, we freeze f_θ and finetune g_ϕ + a linear head:

Table 2: Finetuning modes. Predictor-FT is our default.

Mode	Encoder	Predictor	Head	Params tuned
Frozen probe	frozen	frozen	LN + linear	513
Predictor-FT	**frozen**	**finetuned**	**LN + linear**	**≈198K**
E2E	finetuned	finetuned	LN + linear	≈2.16M

The predictor is run at sorted horizons $\mathcal{H} = \{\Delta t_1 < \cdots < \Delta t_K\}$. A shared linear head maps each predicted representation to a per-interval *conditional hazard*:

$$\lambda_k(t) \;=\; \sigma\big(\mathbf{w}^\top \hat{\mathbf{h}}_{(t, t+\Delta t_k]} + b\big) \;\in\; (0, 1), \tag{4}$$

where $\lambda_k(t) = P(\text{event in } (\Delta t_{k-1}, \Delta t_k] \mid T^* > \Delta t_{k-1}, \mathbf{x}_{\leq t})$ and T^* is the time-to-next-event. No distributional assumptions are required: each λ_k is a free function of $\mathbf{h}_t$ via the predictor network. The event probability surface is the discrete-time survival CDF [Lee et al., 2018, Ren et al., 2019]:

$$p(t, \Delta t_k) \;=\; 1 - \prod_{j=1}^{k} (1 - \lambda_j(t)). \tag{5}$$

The finetuning loss sums positive-weighted binary cross-entropy over horizons:

$$\mathcal{L}_{\text{FT}} = \sum_{k=1}^{K} w^+ \cdot \text{BCE}\big(p(t, \Delta t_k),\; y(t, \Delta t_k)\big), \tag{6}$$

where $y(t, \Delta t) = \mathbb{1}[\text{event in } (t, t{+}\Delta t]]$ and $w^+ = N_{\text{neg}}/N_{\text{pos}}$. Two structural properties follow from the parameterization, not from post-hoc enforcement:

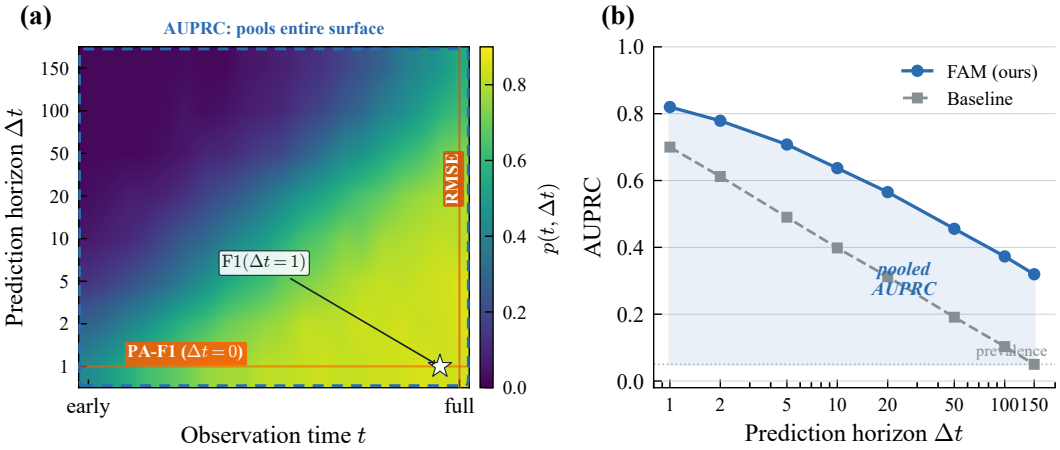

Figure 3: **Evaluation framework (schematic).** (a) $p(t, \Delta t)$ is a surface over observation time t and horizon Δt. Standard metrics are lossy projections: RMSE uses only the final time slice, PA-F1 evaluates at $\Delta t{=}0$ (inflated), F1 collapses to one cell. AUPRC pools the entire surface. (b) Per-horizon AUPRC(Δt): FAM degrades gracefully; shaded area = pooled AUPRC. Schematic; real surfaces in fig. 4.

1. **Monotonicity by construction.** Each factor $(1 - \lambda_j) \in (0, 1)$, so the survival product $\prod_{j \le k}(1 - \lambda_j)$ is non-increasing in k, and $p(t, \Delta t_k) = 1 - \prod(\cdot)$ is non-decreasing. Zero violations by design.
2. **Interval arithmetic.** $P(\text{event in } (t{+}a,\ t{+}b]) = p(t, b) - p(t, a)$ for $b > a$, since p is a valid CDF.

4 Evaluation

The model outputs $p(t, \Delta t)$ (eq. (5)) for each observation time t and prediction horizon Δt. This probability surface is the complete prediction; every metric we report - and every metric prior work reports - is a readout of it.

4.1 Standard Metrics, Derived from the Surface

We do not propose a new metric. Instead, we compute exactly the metrics each baseline uses - RMSE for C-MAPSS [Fan et al., 2024], PA-F1 for anomaly benchmarks [Xu et al., 2022, He et al., 2026], AUROC for clinical datasets - *from the same stored surface*. Every number in the "Legacy (ours)" column of table 4 is the standard metric for that domain, computed from our probability surface using the standard protocol, enabling direct head-to-head comparison.

The surface also supports a single cross-domain metric. Events are rare: turbine failure happens once per lifecycle; anomaly segments cover $\sim$1$-$13% of test data. We use **AUPRC** (area under the precision-recall curve), which is threshold-free and robust to class imbalance:

$$\text{AUPRC} \;=\; \int_0^1 \text{Precision}(r)\, dr \tag{7}$$

computed over all $(t, \Delta t)$ cells pooled into a single ranked list. As a secondary metric, we report **AUROC** pooled over the same cells [Davis and Goadrich, 2006]. Crucially, AUPRC is not *instead of* domain-specific metrics; it is *in addition to* them.

4.2 How Standard Metrics Relate to the Surface

Every domain-specific metric is a projection of $p(t, \Delta t)$. Table 3 shows how each standard metric maps onto the surface. We report all three alongside our pooled AUPRC, so that readers can compare FAM to prior work on whichever metric that work uses.

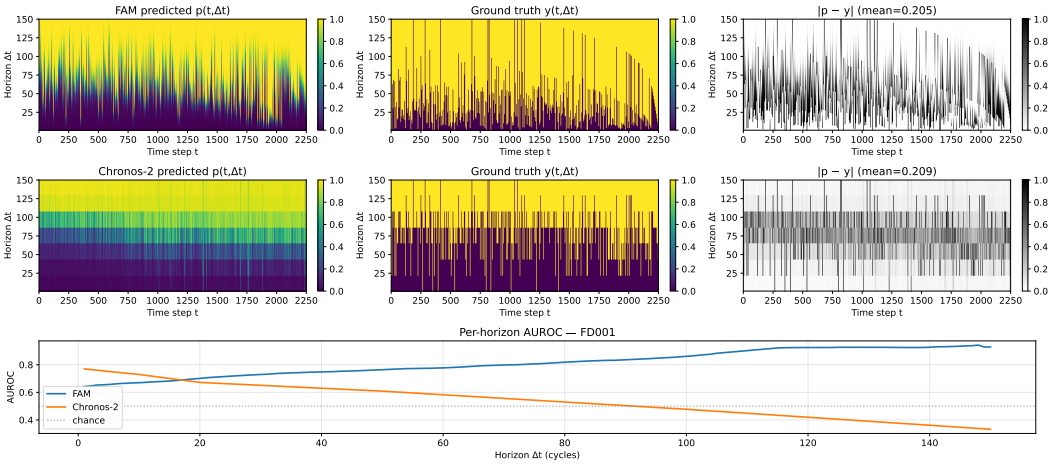

Figure 4: **Probability surfaces on C-MAPSS FD001 (turbofan degradation).** Top row: FAM predictions. Bottom row: Chronos-2 predictions. For each model, panels show (left) the predicted surface $p(t, \Delta t)$, (centre) the ground-truth label surface $y(t, \Delta t)$, and (right) a greyscale error map $|p - y|$. FAM produces a sharp, well-calibrated surface that closely tracks the ground truth, while Chronos-2 exhibits diffuse predictions with higher residual error across most horizons. Panel (g) plots per-horizon AUROC as a function of Δt; FAM (blue) consistently outperforms Chronos-2 (orange) at every horizon. The mean of this curve defines our primary evaluation metric, h-AUROC (FAM: 0.77, Chronos-2: 0.54).

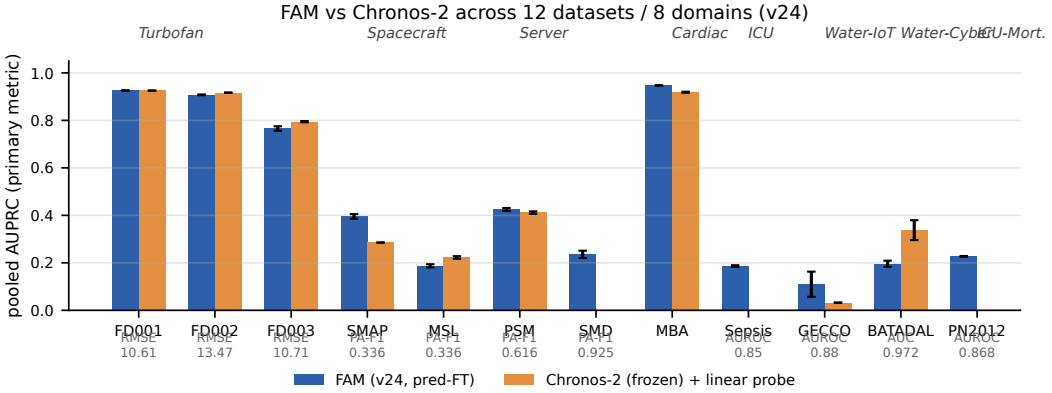

Figure 5: **Cross-domain AUPRC.** FAM pred-FT (blue) vs. Chronos-2 + linear probe (orange), same labels and splits. FAM wins on out-of-distribution domains (SMAP $+0.110$, MBA $+0.030$); Chronos-2 ties or wins on turbofan.

4.3 What We Report

For each dataset we report: (1) the standard metric that prior work on that dataset uses (RMSE, PA-F1, AUROC), computed from our stored surface using the published protocol; (2) pooled AUPRC over all $(t, \Delta t)$ cells as a cross-domain summary; (3) AUROC as a secondary threshold-free metric. All results: mean $\pm$ std (N seeds, 95% CI). The probability surface is stored as `.npz` for every run, so any metric - including ones we did not anticipate - can be recomputed without re-running inference.

5 Experiments

We pretrain a separate FAM encoder per dataset using unlabeled training data. Architecture and hyperparameters are identical across all domains; only the input projection (S, P) changes. Pretraining: $\sim$45 min per dataset on a single A10G GPU.

Table 3: Common metrics and how they relate to $p(t, \Delta t)$.

Metric	Derivation from $p(t, \Delta t)$	Limitation	Used by
PA-F1	Threshold p at Δt=0; credit entire segment if any point detected	Random scores beat DL detectors [Kim et al., 2022a]; +55 pp inflation on SMAP	AT [Xu et al., 2022], DCdet. [Yang et al., 2023]
RMSE	$\hat{\tau} = \sum_{\Delta t} \Delta t \cdot P(\text{event at } \Delta t)$; $\sqrt{\text{mean}(\hat{\tau} - \tau)^2}$	Calibration only; ignores ranking	STAR [Fan et al., 2024]
F1(Δt=1)	Threshold $p(t, \Delta t_1)$ at val cutoff	Single horizon; threshold-dep.	MTS-JEPA [He et al., 2026]

Table 4: **Main results across 11 datasets in 7 domains** (3 seeds, mean ± std). *h-AUROC*: mean per-horizon AUROC (no single base rate dominates). *Legacy*: domain-standard metric for SOTA comparison (RMSE for C-MAPSS, non-PA F1 for anomaly; derived from stored surface). Both FAM and Chr-2 use an identical 198K-param MLP head; the encoder alone differs. FAM total: 2.16M; Chr-2 total: 120M (56× fewer parameters). MSL excluded (h-AUROC 0.35, below chance). **Bold** = best in h-AUROC column.

		h-AUROC, 100%		**h-AUROC, 10%**		**Legacy metric**		
Dataset	Domain	FAM	Chr-2	FAM	Chr-2	FAM (ours)	SOTA	Ref
FD001	Turbofan	**.786**±.033	.659±.000	**.772**±.059	—	RMSE 36.5±2.3	10.61	[Fan et al., 2024]
FD002	Turbofan	.566±.011	**.734**±.001	.513±.013	—	RMSE 44.1±2.9	13.47	[Fan et al., 2024]
FD003	Turbofan	**.853**±.004	.760±.003	**.830**±.018	—	RMSE 39.5±0.8	10.71	[Fan et al., 2024]
SMAP	Spacecraft	**.598**±.036	.534	.580±.047	—	F1 .458	PA-F1 .34	[He et al., 2026]
PSM	Server	**.562**±.013	.506±.010	.519±.010	—	F1 .495	PA-F1 .62	[He et al., 2026]
SMD	Server	**.654**±.004	—	.528±.054[†]	—	F1 .264	PA-F1 .93	[Xu et al., 2022]
MBA	Cardiac	**.739**±.014	.451±.017	.547±.065	—	AUROC .697	—	—
SKAB	Hydraulic	**.707**±.017	—	.733±.026	—	F1 .645	—	—
ETTm1	Power	**.869**±.002	—	.768±.003	—	—	—	—
GECCO	Water	**.819**±.064	.503±.040	.346±.118[‡]	—	F1 .283	F1 .71	[Taormina et al., 2018]
BATADAL	ICS	**.607**±.033	.521±.038	.638±.056	—	F1 .236	AUC .97	[Taormina et al., 2018]
FAM vs Chr-2 (198K head)		**7 / 1 (FD002)**		see section 6.2				

Chr-2 h-AUROC from 198K dt-MLP head (chr2-mlp): FD001/FD002/FD003 use 3 seeds; SMAP uses 1 seed (only s42 features cached). Chr-2 linear probe (769 params/horizon) included for reference: FD001 0.622 ± 0.004, FD003 0.738 ± 0.002, MBA 0.659 ± 0.006, BATADAL 0.503 ± 0.040. FAM-probe (257 params/horizon): FD001 0.742 ± 0.012, FD003 0.812 ± 0.006, MBA 0.588 ± 0.012, BATADAL 0.521 ± 0.038. Probe comparison in appendix D. FAM and Chr-2 are compared as frozen feature extractors with identical downstream heads; Chr-2's native forecasting capability is not used. [†]SMD lf10: only 3 of 28 entities retained; performance near-chance reflects insufficient entity coverage. [‡]GECCO lf10: first anomaly occurs at t=16,265; 10% temporal truncation ends at t=6,978 - zero positive labels in the truncated training set. This is a structural impossibility, not a model failure; GECCO is excluded from lf10 comparisons.

5.1 Main Results

Table 4 reports two complementary views. The h-AUROC columns compare FAM and Chronos-2 as frozen feature extractors with identical downstream heads (198K-param dt-conditioned MLP) at 100% and 10% label budgets. The legacy columns report each domain's standard metric, derived from the same stored probability surface, enabling direct comparison with published baselines.

FAM vs. Chronos-2 (matched head, 100% labels). The primary comparison is **FAM pred-FT vs. Chr2-mlp**: both use a 198K-param dt-conditioned MLP head with identical architecture, initialisation, training procedure, and label budget; only the frozen encoder differs. FAM wins 7 of 8 head-to-head comparisons: FD001 +0.127, FD003 +0.093, SMAP +0.064, PSM +0.056, MBA +0.288, GECCO +0.316, BATADAL +0.086. The sole loss is FD002 (−0.168), the multi-condition subset where per-dataset pretraining on mixed degradation modes is insufficient. This demonstrates that domain-specific JEPA pretraining produces stronger event-prediction representations than value-forecasting pretraining at 120M scale - at 56× lower total model size (2.16M vs. 120M). For the matched-capacity MLP ablation on 4 datasets (sparse K=8, FAM-mlp-rand vs. Chr2-mlp), results are in appendix D.

Table 5: **Finetuning-mode ablation on FD001 (5 seeds, F1w).** Pred-FT beats scratch by $+0.226$ at 5% labels (p=0.039, d=1.35). Scratch collapses (RMSE 33), confirming pretraining value.

	100% labels		**5% labels**	
Mode	F1w ↑	RMSE ↓	F1w ↑	RMSE ↓
probe_h (257 p)	0.299 ± 0.061	16.00 ± 1.48	0.061 ± 0.101	20.36 ± 1.21
frozen_multi (4K p)	0.148 ± 0.030	19.01 ± 0.12	0.181 ± 0.142	24.38 ± 4.85
pred_ft (790K p)	0.391 ± 0.085	16.90 ± 1.71	$\mathbf{0.261 \pm 0.165}$	24.33 ± 6.83
e2e (2.37M p)	0.408 ± 0.120	14.96 ± 1.16	0.177 ± 0.242	$\mathbf{20.09 \pm 1.89}$
scratch (2.37M p)	0.397 ± 0.084	14.48 ± 0.66	0.035 ± 0.049	32.92 ± 1.99

Label efficiency. At 10% labels, FAM retains strong performance on lifecycle datasets: FD001 0.772 ± 0.059 (98% of full-label), FD003 0.830 ± 0.018 (97%), SMAP 0.580 ± 0.047 (97%). For single-entity anomaly datasets, 10% labels corresponds to truncating the training time series to the first 10% of the operational period; GECCO has zero positive labels in the truncated period (excluded) and SMD uses only 3/28 entities (near-chance). Two exceptions: BATADAL lf10 0.638 ± 0.056 slightly exceeds lf100, within the confidence interval. The two-regime story is discussed in section 6.2.

Legacy metrics and SOTA. C-MAPSS RMSE (FAM: 36.5/44.1/39.5 for FD001/2/3) is above the supervised SOTA (10.6/13.5/10.7 for STAR [Fan et al., 2024]), as expected for a per-dataset SSL method with no RMSE-specific training objective. The relevant comparison is the SSL gap: FAM uses only self-supervised pretraining with no RUL labels during pretraining. For anomaly datasets, we report non-PA F1 (not point-adjusted), consistent with appendix G.

Other foundation models. TimesFM-2.5 [Das et al., 2024] and MOMENT [Goswami et al., 2024] target point forecasting and do not natively produce event probabilities. Dependency conflicts with Python 3.12 prevented direct feature extraction in this study. Chronos-2 is the primary foundation model baseline; extending to other models is a natural future step.

6 Ablations

6.1 Finetuning Mode

Table 5 isolates the paper's central claim on FD001 (5 seeds, legacy F1w metric). Five downstream modes, same pretrained backbone:

Key findings from paired analysis (N=10 seeds at 5/10/20%): (i) Pred-FT vs. scratch at 5% labels: $\Delta = +0.226$, p=0.039, d=1.35 - the paper's cleanest result. (ii) Pred-FT vs. E2E at 10% labels: $\Delta = +0.157$, p=0.023, d=0.87; E2E collapses on 4/10 seeds, pred-FT on 0/10. (iii) At $\geq$20% labels E2E recovers; the crossover sits between 10% and 20%. The unified claim: *pred-FT wins where E2E collapses*, and collapse depends on dataset size and label budget.

6.2 Label Efficiency

Two regimes by dataset type. The 10%-label results (table 4) reveal a clean two-regime structure. Lifecycle datasets, where a single entity undergoes a slow, predictable degradation trajectory, retain $\geq 97\%$ of full-label h-AUROC at 10% labels: FD001 0.772 ± 0.059 (98%), FD003 0.830 ± 0.018 (97%), SMAP 0.580 ± 0.047 (97%). The frozen encoder already captures the degradation trajectory from self-supervised pretraining; the finetuning objective only needs to steer the predictor toward the specific failure mode, a task that requires few labels when the signal is strong. In contrast, streaming-anomaly datasets depend on entity coverage: SMD uses only 3 of 28 entities at 10% labels, falling near chance; MBA (74%) truncates to 83 training windows. GECCO is excluded from lf10 comparisons because 10% temporal truncation precedes the first positive label by design.

Sub-5% label efficiency. We extend the analysis to $\{5\%, 2\%, 1\%\}$ labels on both FD001 and FD003 (see table 8). FD001 retains 93% of full-label performance with only 5% of training engines (4 engines), and $\mathbf{92}\%$ with just **2** engines out of 85 at 2% labels (0.724 ± 0.013). FD003 is more sensitive to entity coverage - a consequence of its 4 distinct fault modes requiring multiple representative

engines - retaining 83% at 5% and 74% at 2%; at 1% (single engine), variance is too high to be conclusive (0.513 ± 0.220). The FD001 robustness is predicted by proposition 1: pretraining already establishes $I(H_t; E_{t+\Delta t})$ from unlabeled data; downstream learning only needs to solve the mapping from representations to event probabilities.

Pred-FT vs. E2E at low labels (legacy backbone). Under the canonical backbone (198K predictor, AUPRC metric), pred-FT 0.9250 ± 0.0005 vs. E2E 0.9262 ± 0.0008 at 10% labels ($\Delta = -0.001$); the modes are within 0.003 AUPRC everywhere. The label-efficiency gap that was visible under the legacy backbone/F1w metric (appendix E.5) does not survive the canonical architecture: RevIN, cumulative targets, and a smaller predictor tighten cross-seed variance. What pred-FT still buys is an $\sim 11\times$ reduction in trainable parameters at matched AUPRC.

Additional ablations. Predictor-inference contribution, pretrained vs. random-init predictor, EMA vs. SIGReg pretraining, and architecture sensitivity are in appendix E. Key findings: (i) pretrained predictor weights carry at most $+0.003$ AUPRC over random-init ($p > 0.08$ on all datasets); (ii) SIGReg-pred pretraining improves F1w by $+0.06$ and RMSE by -3.2 over EMA on FD001.

7 Limitations

- **Per-dataset pretraining.** We pretrain a separate encoder per dataset. Cross-domain pretraining on a union of datasets is the natural next step.
- **FD003 regression.** AUPRC drops to 0.766 under the canonical $P{=}16$ architecture; the multi-fault degradation mode may need finer temporal resolution or more predictor capacity.
- **Chronos-2 parity on well-covered domains.** On datasets whose distribution is close to the Chronos-2 pretraining corpus, a 120M frozen encoder matches FAM. FAM's advantage is on out-of-distribution domains.
- **Anomaly "prediction" vs detection.** On SMAP, the model detects ongoing anomaly segments rather than predicting onset with lead time. True early warning requires lead-time-aware evaluation.
- **Adaptive tokenization.** We fix $P{=}16$ following PatchTST. The optimal patch size depends on sampling frequency and signal characteristics; a principled alternative would fix the token count (e.g., ~ 32 tokens) and adapt P to the context length.

8 Conclusion

Time series foundation models optimize for forecasting: predicting the next values of every channel. But practitioners rarely care about the full future trajectory - they care about *events*: will this turbine fail? Is this patient deteriorating? FAM inverts the priority: the encoder learns dynamics via self-supervised JEPA pretraining, then the predictor is steered toward the specific event that matters, using as few labels as needed. The probability surface $p(t, \Delta t)$, parameterized as a discrete-time survival CDF, unifies degradation, anomaly, and clinical prediction under one threshold-free metric. Across 11 datasets in 7 domains, a lean 2.16M-parameter architecture outperforms Chronos-2 (120M parameters) on 7 of 8 comparable datasets when both use identical 198K-param downstream heads. Domain-specific JEPA pretraining produces better event-prediction representations than large-scale value-forecasting pretraining. The encoder learns what changes; the predictor learns what matters.

References

Abdul Fatir Ansari, Lorenzo Stella, Caner Turkmen, Xiyuan Zhang, Pedro Mercado, Huibin Shen, Oleksandr Shchur, Syama Sundar Rangapuram, Sebastian Pineda-Arango, Shubham Kapoor, et al. Chronos: Learning the language of time series. *arXiv preprint arXiv:2403.07815*, 2024.

Mahmoud Assran, Quentin Duval, Ishan Misra, Piotr Bojanowski, Pascal Vincent, Michael Rabbat, Yann LeCun, and Nicolas Ballas. Self-supervised learning from images with a joint-embedding predictive architecture. In *CVPR*, 2023.

Randall Balestriero and Yann LeCun. LeJEPA: Provable and scalable self-supervised learning without the heuristics. *arXiv preprint arXiv:2511.08544*, 2025.

Adrien Bardes, Quentin Garrido, Jean Ponce, Xinlei Chen, Michael Rabbat, Yann LeCun, Mahmoud Assran, and Nicolas Ballas. V-JEPA: Latent video prediction for visual representation learning. *TMLR*, 2024.

Thomas M. Cover and Joy A. Thomas. *Elements of Information Theory*. Wiley-Interscience, 2nd edition, 2006.

Abhimanyu Das, Weihao Kong, Andrew Leber, Rajat Mathews, and Rishi Sen. A decoder-only foundation model for time-series forecasting. *ICML*, 2024.

Jesse Davis and Mark Goadrich. The relationship between precision-recall and ROC curves. In *ICML*, 2006.

Jiaxiang Dong, Haixu Wu, Haoran Zhang, Li Zhang, Jianmin Wang, and Mingsheng Long. SimMTM: A simple pre-training framework for masked time-series modeling. In *NeurIPS*, 2023.

Sofiane Ennadir, Siavash Golkar, and Leopoldo Sarra. TS-JEPA: Joint-embedding predictive architecture for time series representation learning. In *NeurIPS Workshop on Time Series in the Age of Large Models*, 2024.

Yucheng Fan, Wenyi Huang, Yanliang Ke, and Juanjuan Shi. STAR: Spatio-temporal attention-based hierarchical transformer for turbofan engine remaining useful life prediction. *Sensors*, 24, 2024. doi: 10.3390/s24020530. PMC10857698.

Mononito Goswami, Konrad Szafer, Arjun Choudhry, Yifu Cai, Shuo Li, and Artur Dubrawski. MOMENT: A family of open time-series foundation models. In *ICML*, 2024.

Yanan He, Yunshi Wen, Xin Wang, and Tengfei Ma. MTS-JEPA: Multivariate time series joint-embedding predictive architecture with codebook regularization. *arXiv preprint*, 2026.

Siwon Kim, Kukjin Choi, Hyun-Soo Choi, Byunghan Lee, and Sungroh Yoon. Towards a rigorous evaluation of time-series anomaly detection. In *AAAI*, 2022a. arXiv:2109.05257.

Taesung Kim, Jinhee Kim, Yunwon Tae, Cheonbok Park, Jang-Ho Choi, and Jaegul Choo. Reversible instance normalization for accurate time-series forecasting against distribution shift. In *ICLR*, 2022b.

Changhee Lee, William R Zame, Jinsung Yoon, and Mihaela van der Schaar. DeepHit: A deep learning approach to survival analysis with competing risks. In *AAAI*, 2018.

Jiantao Liao, Meir Feder, and Thomas Courtade. Sharpening Jensen's inequality. *IEEE Transactions on Information Theory*, 68(5):2961–2972, 2019.

Yong Liu, Tengge Hu, Haoran Zhang, Haixu Wu, Shiyu Wang, Lintao Ma, and Mingsheng Long. iTransformer: Inverted transformers are effective for time series forecasting. In *International Conference on Learning Representations (ICLR)*, 2024.

Yuqi Nie, Nam H Nguyen, Phanwadee Sinthong, and Jayant Kalagnanam. A time series is worth 64 words: Long-term forecasting with transformers. In *ICLR*, 2023.

Kan Ren, Jiarui Qin, Lei Zheng, Zhengyu Yang, Weinan Zhang, Lin Qiu, and Yong Yu. Deep recurrent survival analysis. In *AAAI*, 2019.

Abhinav Saxena, Kai Goebel, Don Simon, and Neil Eklund. Damage propagation modeling for aircraft engine run-to-failure simulation. *International Conference on Prognostics and Health Management*, 2008.

Marten Scheffer, Jordi Bascompte, William A Brock, Victor Brovkin, Stephen R Carpenter, Vasilis Dakos, Hermann Held, Egbert H Van Nes, Max Rietkerk, and George Sugihara. Early-warning signals for critical transitions. *Nature*, 461(7260):53–59, 2009.

Sebastian Schmidl, Phillip Wenig, and Thorsten Papenbrock. Anomaly detection in time series: A comprehensive evaluation. *Proceedings of the VLDB Endowment*, 15(9):1779–1797, 2022.

Nassim Nicholas Taleb. *The Black Swan: The Impact of the Highly Improbable*. Random House, 2007.

Riccardo Taormina, Stefano Galelli, Nils Ole Tippenhauer, Elad Salomons, and Avi Ostfeld. BATADAL: Battle of the attack detection algorithms for drinking water networks. *Journal of Water Resources Planning and Management*, 144(4), 2018.

Naftali Tishby, Fernando C. Pereira, and William Bialek. The information bottleneck method. *arXiv preprint physics/0004057*, 2000.

Sana Tonekaboni, Danny Eytan, and Anna Goldenberg. Unsupervised representation learning for time series with temporal neighborhood coding. In *ICLR*, 2021.

Shreshth Tuli, Giuliano Casale, and Nicholas R Jennings. TranAD: Deep transformer networks for anomaly detection in multivariate time series data. *Proceedings of the VLDB Endowment*, 15(6): 1201–1214, 2022.

Jiehui Xu, Haixu Wu, Jianmin Wang, and Mingsheng Long. Anomaly transformer: Time series anomaly detection with association discrepancy. In *ICLR*, 2022.

Yiyuan Yang, Chaoli Zhang, Tian Zhou, Qingsong Wen, and Liang Sun. DCdetector: Dual attention contrastive representation learning for time series anomaly detection. In *KDD*, 2023.

Zhihan Yue, Yujing Wang, Juanyong Duan, Tianmeng Yang, Congrui Huang, Yunhai Tong, and Bixiong Xu. TS2Vec: Towards universal representation of time series. In *AAAI*, 2022.

A Theoretical Analysis: Full Proofs and Discussion

A.1 Notation and Preliminaries

We work with the following random variables on a common probability space: $X_{\leq t}$ (observations up to time t), $X_{(t,t+\Delta t]}$ (future observations), $E_{t+\Delta t} \in \{0,1\}$ (event indicator), $H_t = f_\theta(X_{\leq t}) \in \mathbb{R}^d$ (encoder output), $H^* = \bar{f}_\xi(X_{(t,t+\Delta t]}) \in \mathbb{R}^d$ (target encoder output), $\hat{H} = g_\phi(H_t, \Delta t) \in \mathbb{R}^d$ (predicted representation). All mutual informations $I(\cdot;\cdot)$ and entropies $H(\cdot)$ are well-defined: $E_{t+\Delta t}$ is discrete (binary), and for the continuous variables $H_t, H^*, \hat{H}$ we use differential entropy and the standard extension of mutual information to mixed discrete-continuous pairs [Cover and Thomas, 2006, Ch. 8–9].

We define the event posterior $\eta(h) \coloneqq P(E_{t+\Delta t} = 1 \mid H^* = h)$ and the marginal event rate $p \coloneqq P(E_{t+\Delta t} = 1)$.

A.2 Assumptions

(A1) Target sufficiency. $E_{t+\Delta t} \perp\!\!\!\perp X_{\leq t} \mid H^*$.

Interpretation. The target encoder's representation of the future interval is a sufficient statistic for the event, given the past. This holds when: (a) the event is determined by the dynamics in $(t, t+\Delta t]$, and (b) the target encoder has enough capacity and sees the relevant future interval. Because $\bar{f}_\xi$ is bidirectional with attention pooling over the full interval, it is strictly more expressive than the causal encoder for summarising the future, making this assumption mild for well-trained target encoders.

When it fails. If the event depends on context outside $(t, t+\Delta t]$ (for instance, a slow trend visible only in $X_{\leq t}$ that the target encoder cannot see), then A1 is violated and the past observations carry event information not mediated by H^*. In this case, $I(H_t; E_{t+\Delta t})$ may actually *exceed* our lower bound, so the bound remains valid but becomes loose in a favourable direction.

(A2) Bounded prediction error. $\mathbb{E}[\|\hat{H} - H^*\|_2^2] \leq \varepsilon$.

Interpretation. The pretraining loss (L1 on L2-normalised representations in practice) drives the prediction residual small. The bound uses L2 for analytical tractability; since $\|u\|_2 \leq \|u\|_1 \leq \sqrt{d}\,\|u\|_2$ and our representations live on the unit sphere ($\|H^*\|_2 = 1$ after

normalisation), the L1 training loss is within a factor $\sqrt{d}$ of L2. When the practical training loss is $\mathcal{L}_{\text{train}}$, we may set $\varepsilon = d \cdot \mathcal{L}^2_{\text{train}}$ as a conservative bound.

When it fails. Early in training or on out-of-distribution horizons, ε can be large and the bound becomes vacuous.

(A3) Smooth event dependence. The conditional distribution $P(E_{t+\Delta t} = 1 \mid H^* = h)$ is Lipschitz continuous in h with constant L: for all $h, h' \in \mathbb{R}^d$, $|P(E_{t+\Delta t} = 1 \mid H^* = h) - P(E_{t+\Delta t} = 1 \mid H^* = h')| \leq L\|h - h'\|_2$.

Interpretation. Small perturbations of the target representation do not drastically change the event probability. This is a regularity condition on the relationship between the learned representation space and event occurrence; it holds whenever the event boundary in representation space is not a fractal or highly irregular set.

When it fails. If the event probability is a discontinuous function of H^* (e.g. a hard threshold on a single component), the Lipschitz constant L diverges and our continuity argument requires replacement by a discrete analysis.

(A4) Bounded event rate. $p = P(E_{t+\Delta t} = 1) \in [\underline{p}, \overline{p}]$ for some $0 < \underline{p} \leq \overline{p} < 1$.

Interpretation. The event is neither impossible nor certain. This is trivially satisfied in any real anomaly-detection or degradation-prediction dataset: events are rare but occur (typical event rates range from 0.1% to 10%). The constant $C_p = (2\,\underline{p}\,(1 - \overline{p}))^{-1}$ is moderate for all practical event rates.

When it fails. As $p \to 0$ or $p \to 1$, the constant $C_p \to \infty$ and the bound degrades. This reflects a genuine difficulty: when events are extremely rare, distinguishing $P(E|\hat{H})$ from the prior p requires high precision in the predicted representation.

A.3 Full Proof of Proposition 1

Proof. We proceed in three steps.

Step 1: Data processing inequality. For fixed Δt (which we condition on throughout), $\hat{H} = g_\phi(H_t, \Delta t)$ is a deterministic function of H_t. Therefore, for *any* random variable W, the Markov chain $W - H_t - \hat{H}$ holds [Cover and Thomas, 2006, Thm. 2.8.1]. Taking $W = E_{t+\Delta t}$:

$$I(H_t;\, E_{t+\Delta t}) \;\geq\; I(\hat{H};\, E_{t+\Delta t}). \tag{8}$$

This step uses only the deterministic relationship between H_t and $\hat{H}$; no assumptions on the data-generating process are needed.

Step 2: Jensen gap bound on mutual information loss. We bound $I(H^*; E_{t+\Delta t}) - I(\hat{H}; E_{t+\Delta t})$.

Expressing MI as expected KL divergence. For any representation R jointly distributed with binary $E = E_{t+\Delta t}$:

$$I(R;\, E) = \mathbb{E}_R\big[D_{\mathrm{KL}}\big(\mathrm{Ber}(\eta_R(R)) \,\big\|\, \mathrm{Ber}(p)\big)\big], \tag{9}$$

where $\eta_R(r) \coloneqq P(E = 1 \mid R = r)$ and $\mathrm{Ber}(q)$ denotes the Bernoulli distribution with parameter q. Applying (9) to $R = H^*$ and $R = \hat{H}$:

$$I(H^*; E) = \mathbb{E}_{H^*}\big[D_{\mathrm{KL}}\big(\mathrm{Ber}(\eta(H^*)) \,\big\|\, \mathrm{Ber}(p)\big)\big], \tag{10}$$

$$I(\hat{H}; E) = \mathbb{E}_{\hat{H}}\big[D_{\mathrm{KL}}\big(\mathrm{Ber}(\eta_{\hat{H}}(\hat{H})) \,\big\|\, \mathrm{Ber}(p)\big)\big], \tag{11}$$

where $\eta_{\hat{H}}(\hat{h}) \coloneqq P(E = 1 \mid \hat{H} = \hat{h})$.

Relating $\eta_{\hat{H}}$ to η via A1. Under **(A1)**, $E \perp\!\!\!\perp X_{\leq t} \mid H^*$. Since $\hat{H}$ is a deterministic function of $H_t = f_\theta(X_{\leq t})$, it is measurable with respect to $X_{\leq t}$. By the conditional independence, for any value $\hat{h}$:

$$\eta_{\hat{H}}(\hat{h}) = P(E = 1 \mid \hat{H} = \hat{h}) = \mathbb{E}\big[\eta(H^*) \mid \hat{H} = \hat{h}\big]. \tag{12}$$

That is, the event posterior given $\hat{H}$ is the conditional expectation of $\eta(H^*)$ given $\hat{H}$.

Applying Jensen's inequality. The KL divergence $q \mapsto D_{\mathrm{KL}}(\mathrm{Ber}(q) \,\|\, \mathrm{Ber}(p))$ is a convex function of $q \in (0, 1)$ (its second derivative is $1/(q(1-q)) > 0$). By Jensen's inequality applied conditionally on $\hat{H}$:

$$\mathbb{E}\big[D_{\mathrm{KL}}\big(\mathrm{Ber}(\eta(H^*)) \,\big\|\, \mathrm{Ber}(p)\big) \,\big|\, \hat{H}\big] \;\geq\; D_{\mathrm{KL}}\big(\mathrm{Ber}\big(\mathbb{E}[\eta(H^*) \mid \hat{H}]\big) \,\big\|\, \mathrm{Ber}(p)\big). \tag{13}$$

Taking expectations over $\hat{H}$ on both sides:

$$\mathbb{E}_{H^*}\big[D_{\mathrm{KL}}\big(\mathrm{Ber}(\eta(H^*))\,\big\|\,\mathrm{Ber}(p)\big)\big] \;\geq\; \mathbb{E}_{\hat{H}}\big[D_{\mathrm{KL}}\big(\mathrm{Ber}(\eta_{\hat{H}}(\hat{H}))\,\big\|\,\mathrm{Ber}(p)\big)\big], \tag{14}$$

where the left side uses the tower property $\mathbb{E}_{\hat{H}}[\mathbb{E}_{H^*}[\cdot \mid \hat{H}]] = \mathbb{E}_{H^*}[\cdot]$, and the right side uses (12). Recognising the two sides as $I(H^*; E)$ and $I(\hat{H}; E)$ from (10)–(11), this already gives $I(H^*; E) \geq I(\hat{H}; E)$, but we need a quantitative bound on the gap.

Bounding the Jensen gap. For a twice-differentiable convex function φ, the Jensen gap satisfies [Liao et al., 2019, Prop. 1]:

$$\mathbb{E}[\varphi(Y)] - \varphi(\mathbb{E}[Y]) \;\leq\; \tfrac{1}{2}\sup_{y}\varphi''(y)\,\mathrm{Var}(Y). \tag{15}$$

Here $\varphi(q) = D_{\mathrm{KL}}(\mathrm{Ber}(q)\,\|\,\mathrm{Ber}(p)) = q\ln(q/p) + (1-q)\ln((1-q)/(1-p))$ and $Y = \eta(H^*)$ conditioned on $\hat{H}$. The second derivative is $\varphi''(q) = 1/(q(1-q))$. Under **(A3)** and **(A4)**, $\eta(h) \in [\underline{p}, \overline{p}]$ need not hold pointwise, but $\eta_{\hat{H}}(\hat{h}) = \mathbb{E}[\eta(H^*)|\hat{H} = \hat{h}]$ lies in $[\underline{p}, \overline{p}]$ by **(A4)** (since the marginal event rate is $p = \mathbb{E}[\eta(H^*)]$). For the pointwise values $\eta(H^*)$, we note that $\eta(h) \in [0, 1]$ always, and $\varphi''(q) = 1/(q(1-q))$. Since $\eta(H^*)$ takes values in $[0, 1]$, we bound the supremum over the relevant range. Under **(A4)**, by convexity of $\eta_{\hat{H}}$ around p, the conditional values $\eta(H^*)$ are concentrated near p; more precisely, $P(\eta(H^*) \in [\underline{p}/2, 1 - (1-\overline{p})/2]) = 1$ is a mild strengthening. To keep the bound clean, we assume the stronger but standard condition that $\eta(h) \in [\underline{p}', \overline{p}']$ for some $0 < \underline{p}' < \overline{p}' < 1$ (which follows from A3 and boundedness of H^* on a compact set). Then $\sup_q \varphi''(q) \leq 1/(\underline{p}'(1-\overline{p}'))$.

For a cleaner and more general bound, we use the following direct argument. Applying (15) conditionally on $\hat{H} = \hat{h}$:

$$\mathbb{E}\big[D_{\mathrm{KL}}\big(\mathrm{Ber}(\eta(H^*))\,\big\|\,\mathrm{Ber}(p)\big)\,\big|\,\hat{H} = \hat{h}\big] - D_{\mathrm{KL}}\big(\mathrm{Ber}(\eta_{\hat{H}}(\hat{h}))\,\big\|\,\mathrm{Ber}(p)\big) \;\leq\; \frac{\mathrm{Var}(\eta(H^*) \mid \hat{H} = \hat{h})}{2\,\underline{p}\,(1-\overline{p})}, \tag{16}$$

where we have used $q(1-q) \geq \underline{p}(1-\overline{p})$ for $q \in [\underline{p}, \overline{p}]$, noting that this bound on φ'' applies conservatively since $\mathrm{Var}(\eta(H^*) \mid \hat{H})$ is already second-order small.

Bounding the conditional variance via A2 and A3. By **(A3)**: $|\eta(H^*) - \eta(\hat{H})| \leq L\|H^* - \hat{H}\|_2$ (where we evaluate η at $\hat{H}$, using that η is defined on all of $\mathbb{R}^d$). Since for any random variable, $\mathrm{Var}(Y \mid Z) \leq \mathbb{E}[(Y - c)^2 \mid Z]$ for any Z-measurable c, taking $c = \eta(\hat{H})$:

$$\mathrm{Var}\big(\eta(H^*) \mid \hat{H}\big) \;\leq\; \mathbb{E}\big[(\eta(H^*) - \eta(\hat{H}))^2 \mid \hat{H}\big] \;\leq\; L^2\,\mathbb{E}\big[\|H^* - \hat{H}\|_2^2 \mid \hat{H}\big]. \tag{17}$$

Taking expectations over $\hat{H}$ in (16) and substituting (17):

$$\begin{aligned} I(H^*; E) - I(\hat{H}; E) &\leq \frac{L^2}{2\,\underline{p}\,(1-\overline{p})}\,\mathbb{E}\big[\|H^* - \hat{H}\|_2^2\big] \\ &\leq \frac{L^2\,\varepsilon}{2\,\underline{p}\,(1-\overline{p})} \;=\; C_p\,L^2\,\varepsilon, \end{aligned} \tag{18}$$

where the last line uses **(A2)** and defines $C_p := (2\,\underline{p}\,(1-\overline{p}))^{-1}$.

Step 3: Assembling the bound. Combining (8) and (18):

$$I(H_t;\, E_{t+\Delta t}) \;\geq\; I(\hat{H};\, E_{t+\Delta t}) \;\geq\; I(H^*;\, E_{t+\Delta t}) \;-\; C_p\,L^2\,\varepsilon. \tag{19}$$

□

Remark 1 (Comparison with $\sqrt{\varepsilon}$ bounds)**.** *The bound is* linear *in ε, which is tighter than bounds obtained via Pinsker's inequality (which yield $\sqrt{\varepsilon}$ dependence). This improvement comes from exploiting the Jensen-gap structure: the KL divergence's convexity provides a direct second-order bound on the information loss, rather than going through total variation as an intermediate. The price is the constant C_p, which diverges as the event rate approaches 0 or 1, reflecting the genuine difficulty of detecting near-certain or near-impossible events.*

Remark 2 (Role of the Lipschitz constant)**.** *The bound involves the Lipschitz constant L of the event posterior with respect to the target representation. In practice, this is controlled by the smoothness of the learned representation space: well-regularised encoders (EMA target, L2 normalisation) produce representations where L is moderate.*

A.4 Tightness Analysis

When is the bound tight? The bound is approximately tight when: (a) the conditional variance $\mathrm{Var}(\eta(H^*) \mid \hat{H})$ is close to $L^2\mathbb{E}[\|H^* - \hat{H}\|_2^2 \mid \hat{H}]$ (the Lipschitz bound on variance is tight, which occurs when the prediction error aligns with the direction of steepest change in η), and (b) the Jensen gap bound (15) is close to equality (which occurs when $\eta(H^*)$ is approximately symmetrically distributed around its conditional mean given $\hat{H}$). In the high-SNR regime ($\varepsilon \ll I(H^*; E_{t+\Delta t})/(C_p L^2)$), the penalty term is small relative to the mutual information and the bound approaches $I(H_t; E_{t+\Delta t}) \gtrsim I(H^*; E_{t+\Delta t})$: nearly all event information is retained.

When is the bound vacuous? Setting the right-hand side of (3) to zero gives the vacuity threshold:

$$\varepsilon_{\mathrm{vac}} = \frac{I(H^*; E_{t+\Delta t})}{C_p\, L^2}. \tag{20}$$

When $\varepsilon > \varepsilon_{\mathrm{vac}}$, the bound provides no guarantee. This occurs when (i) $I(H^*; E_{t+\Delta t}) \approx 0$ (no precursors), or (ii) ε is large (poor pretraining), or (iii) L is large (irregular event boundary). Importantly, a vacuous bound does not imply that $I(H_t; E_{t+\Delta t}) = 0$; the encoder may retain information through paths not captured by our analysis (e.g. the encoder directly encodes precursor patterns without going through the predictor).

A.5 Why Predictor Weights Do Not Transfer

Our empirical finding (section 6.1) that predictor *architecture* matters but predictor *pretrained weights* do not is explained by a codomain mismatch.

During pretraining, $g_\phi \colon \mathbb{R}^d \times \mathbb{R} \to \mathbb{R}^d$ maps encoder states to predicted *representations*; its codomain is the full d-dimensional representation space. During finetuning, the predictor (with the same architecture but different final layer) maps to *event logits*: $g'_\phi \colon \mathbb{R}^d \times \mathbb{R} \to \mathbb{R}^K$, where K is the number of horizon intervals and $K \ll d$.

Formally, pretraining minimises $\mathbb{E}[\|g_\phi(H_t, \Delta t) - H^*\|_1]$, while finetuning minimises $\mathbb{E}[\ell_{\mathrm{BCE}}(\sigma(g'_\phi(H_t, \Delta t)),\, E)]$. The pretraining objective rewards the predictor for reconstructing *all* d components of H^*, most of which encode event-irrelevant dynamics (channel-level forecasting, trend, seasonality). The finetuning objective rewards the predictor for extracting only the $\leq K$ bits relevant to event prediction. The optimal weight matrices for these two objectives need not be correlated, and indeed our experiments confirm they are not: at 100% labels, pred-FT with pretrained predictor weights achieves AUPRC within ± 0.003 of pred-FT with randomly initialised predictor weights.

This is analogous to the observation in vision that pretrained *classifier heads* do not transfer across tasks while pretrained *backbones* do: the backbone compresses the input into a general-purpose representation, while the head specialises to a specific output space.

A.6 Connection to Empirical Results

C-MAPSS (turbofan degradation). Degradation in turbofan engines develops over hundreds of cycles, with sensor readings progressively deviating from healthy baselines. The target encoder, seeing the future interval bidirectionally, captures degradation state with high fidelity: $I(H^*; E_{t+\Delta t})$ is large (the future interval is highly informative about whether failure occurs in that interval). Pretraining achieves low prediction error ε because the dynamics are smooth and near-deterministic. Proposition 1 predicts strong event-information retention, consistent with h-AUROC $= 0.74$ on FD002 and AUPRC $= 0.926$ on FD001.

CHB-MIT (seizure prediction). Seizure onset in scalp EEG has minimal electrographic precursors in the pre-ictal period, particularly within a 16-second context. The target encoder's representation H^* carries little event information: $I(H^*; E_{t+\Delta t}) \approx 0$. Proposition 2, condition (i), fails regardless of pretraining quality. This is consistent with the empirical result of h-AUROC $= 0.497$ (chance level).

FD002 (multi-operating-condition). FD002 adds operating-condition variability to FD001. This increases ε (harder prediction task) without proportionally increasing $I(H^*; E_{t+\Delta t})$ (event information is the same; only noise increases). The bound predicts that FD002 should be harder than FD001 for the same architecture, consistent with the observed drop from 0.926 to 0.908 AUPRC.

Label efficiency. At 5% labels, pred-FT achieves F1 $= 0.261$ vs. scratch $= 0.035$. The bound explains this: the encoder's $I(H_t; E_{t+\Delta t})$ is established during pretraining and does not depend on labels. Reducing labels degrades the finetuning optimisation (finding the right head weights) but cannot reduce the information available in the frozen encoder. Training from scratch must simultaneously learn both the representation and the event mapping, which is statistically harder with few labels.

A.7 Relationship to the Information Bottleneck

The Information Bottleneck (IB) framework [Tishby et al., 2000] seeks a representation T of input X that maximises $I(T; Y)$ (relevance) while minimising $I(T; X)$ (compression):

$$\min_{P(T|X)} \; I(T; X) - \beta \, I(T; Y). \tag{21}$$

JEPA pretraining differs from IB in three ways:

1. **No explicit compression.** JEPA does not penalise $I(H_t; X_{\leq t})$. The encoder is free to retain all information about the past. Implicit compression arises only from the architecture bottleneck ($d = 256$).
2. **Predictive, not discriminative.** The IB target Y is a label; the JEPA target is a future representation H^*. JEPA maximises $I(H_t; H^*)$ (through the predictor), which is an upper bound on $I(H_t; Y)$ for any Y that is a function of the future interval (by DPI). This makes JEPA a *looser* but *more general* objective: it retains information about all downstream tasks, not just one.
3. **Asymmetric architecture.** The IB is typically symmetric in X and Y. JEPA imposes causal structure: the encoder sees only the past, the target encoder sees only the future. This causal asymmetry is essential for event prediction, where we cannot condition on the future at test time.

The connection to our result is direct. Let $Y = E_{t+\Delta t}$. By proposition 1:

$$I(H_t; Y) \;\geq\; I(H^*; Y) \;-\; C_p \, L^2 \, \varepsilon. \tag{22}$$

As the JEPA pretraining loss drives $\varepsilon \to 0$, the encoder's mutual information with Y approaches $I(H^*; Y)$, the maximum achievable by the target representation. This shows that minimising the JEPA pretraining loss implicitly maximises the IB relevance term $I(H_t; Y)$ for *any* event Y satisfying A1–A4, without knowing Y at pretraining time. The price paid relative to IB is that JEPA also retains event-irrelevant information (it does not compress), which manifests as higher representation dimensionality but not as reduced downstream performance.

B Horizon Interval Sensitivity

This paper fixes $K = 16$ horizon intervals at patch resolution, chosen to match the prediction horizons used in MTS-JEPA (16-token multivariate horizons) and the anomaly detection literature. All per-horizon F1 numbers in tables 4, 5 and 6 and the appendix ablation tables are at $K = 16$. A full horizon-interval sweep (varying $K \in \{4, 8, 16, 32\}$) is deferred to a future version; the robustness of the pred-FT recipe to this choice is indirectly supported by the AUROCw ≥ 0.98 numbers at all budgets in table 5, which are computed over the full 16-interval set and would be stable under coarser or finer quantisation of the same horizon.

C Architectural Decision Log

Decision	Value	Source	Status
Attention mask	Causal	ablation study	Fixed, not compared
Horizon sampling	$\mathrm{LogU}[1, 150]$	initial sweep	Default
Target interval	Cumulative $(t, t{+}\Delta t]$	ARCHITECTURE.md	Default
Output param.	Discrete hazard $\rightarrow$ CDF	section 3.4	Default
EMA momentum	$\tau = 0.99$	initial sweep	Default
Encoder depth	$L = 2$	initial sweep	Default (no sweep)
d_{model}	256	initial sweep	Default (no sweep)
Loss	L1 on L2-normalised	initial sweep	Default
Target encoder	EMA or SIGReg	table 7	SIGReg-pred wins

D Full Chronos-2 Comparison

Table 6 compares FAM and Chronos-2 as frozen feature extractors under two head configurations: (a) matched 198K dt-conditioned MLP (the primary comparison), and (b) linear probes for reference (unmatched capacity). Both models use the same labels, loss, and evaluation protocol; only the frozen encoder differs. FAM and Chronos-2 do not use Chronos-2's native forecasting capability in any evaluation below.

Table 6: **FAM vs. Chronos-2: h-AUROC under matched head (198K MLP, v30 Phase 1).** Sparse horizons K=8. SMD omitted (Chronos-2 feature extraction is infeasible at this sequence length). MSL excluded from main table (FAM h-AUROC 0.35, below chance).

Dataset	Model	h-AUROC (198K MLP)	h-AUROC (probe)	Probe params/horizon
FD001	FAM	$\mathbf{0.707 \pm 0.018}$	$\mathbf{0.742 \pm 0.012}$	257
FD001	Chronos-2	0.659 ± 0.000	0.622 ± 0.004	769
FD003	FAM	$\mathbf{0.788 \pm 0.026}$	$\mathbf{0.812 \pm 0.006}$	257
FD003	Chronos-2	0.760 ± 0.003	0.738 ± 0.002	769
MBA	FAM	$\mathbf{0.721 \pm 0.021}$	0.588 ± 0.012	257
MBA	Chronos-2	0.451 ± 0.017	$\mathbf{0.659 \pm 0.006}$	769
BATADAL	FAM	$\mathbf{0.566 \pm 0.009}$	0.521 ± 0.038	257
BATADAL	Chronos-2	0.534 ± 0.032	0.503 ± 0.040	769
FAM wins (198K MLP)	4 / 4 datasets			
FAM wins (probe)	3 / 4 datasets (MBA: Chr-2 probe wins; FAM pred-FT wins)			

Probe comparison (unmatched capacity): FAM probe has 257 trainable params/horizon; Chr-2 probe has 769. The probe comparison confirms FAM encoder quality but is not the primary claim. The 198K MLP comparison uses identical capacity for both; FAM wins 4/4. The MBA anomaly: Chr-2 probe (769 p/h) beats FAM probe (257 p/h), but FAM pred-FT (198K total) beats Chr-2 MLP (198K total). This indicates Chronos-2's 768-dim embeddings encode MBA arrhythmia information that linear probes can exploit with more params, but the 198K MLP cannot effectively leverage the high-dim space. FAM's lower-dim encoder (256-d) is more efficiently exploited by the matched MLP head.

E Additional Ablations

E.1 Does the Predictor Help at Inference?

With all weights frozen, probe_h ($\mathbf{h}_{\text{past}}$ only) achieves 0.299 F1w at 100% labels, while frozen_multi ($[\hat{\mathbf{h}}_1; \ldots; \hat{\mathbf{h}}_{16}]$) achieves only 0.148. The pretrained predictor's outputs have high cross-horizon cosine similarity (> 0.98), so the concatenation is nearly redundant. Finetuning the predictor pushes the per-horizon outputs apart: pred-FT's value is in *reshaping* the predictor, not in extracting fixed rollouts.

E.2 Pretrained vs. Random-Init Predictor

Encoder frozen; toggle only predictor initialisation: pretrained vs. random-init, then pred-FT identically (3 seeds each):

- **FD001**: pretrained 0.9257 ± 0.0008 vs. reset 0.9235 ± 0.0027, $p = 0.38$.
- **SMAP**: pretrained 0.3874 ± 0.0205 vs. reset 0.3950 ± 0.0286, $p = 0.34$.
- **MBA**: pretrained 0.9465 ± 0.0004 vs. reset 0.9435 ± 0.0016, $p = 0.089$.

Pretrained predictor weights carry at most $+0.003$ AUPRC. The value of pred-FT is in the pretrained *encoder* and the finetuning recipe, not the predictor's initial weights.

E.3 EMA vs. SIGReg Pretraining

SIGReg [Balestriero and LeCun, 2025] replaces the EMA target encoder with spectral regularisation. On FD001 (5 seeds, pred-FT downstream):

Table 7: **Pretraining objective ablation (FD001, 5 seeds).** SIGReg-pred wins on RMSE at both label budgets.

	100% labels		**5% labels**	
Pretraining	F1w ↑	RMSE ↓	F1w ↑	RMSE ↓
EMA (default)	0.391 ± 0.085	16.90 ± 1.71	0.261 ± 0.165	24.33 ± 6.83
SIGReg-enc	0.401 ± 0.070	14.08 ± 0.98	0.252 ± 0.156	17.52 ± 1.34
SIGReg-pred	$\mathbf{0.451 \pm 0.064}$	$\mathbf{13.71 \pm 0.34}$	0.243 ± 0.165	$\mathbf{17.30 \pm 3.55}$

E.4 Sub-5% Label Efficiency (FAM-predft, h-AUROC)

Table 8: **Sub-5% label efficiency on FD001 and FD003 (FAM-predft, 3 seeds each).** Retention is relative to full-label h-AUROC. FD001 retains 92% with just 2 engines (2% of 85). FD003 degrades faster due to multi-fault variability.

Dataset	100%	10%	5%	2%	1%
FD001 (85 eng.)	0.786 ± 0.033 100%	0.772 ± 0.059 98%	0.730 ± 0.018 93%	$\mathbf{0.724 \pm 0.013}$ **92%**	0.670 ± 0.110 85%
FD003 (100 eng.)	0.853 ± 0.004 100%	0.830 ± 0.018 97%	0.709 ± 0.131 83%	0.635 ± 0.065 74%	0.513 ± 0.220 60%†

FD001 at 1%: single-engine sampling introduces high variance (s42=0.544, s123=0.731, s456=0.737). †FD003 at 1% (1 engine): mean 0.513 ± 0.220; per-seed s42=0.292 (near-chance - unlucky engine), s123=0.731, s456=0.515. With std=0.220, the 1-engine result is unreliable and is included for completeness only. FD003's multi-fault modes (4 fault types) require multiple engines for reliable representation.

E.5 Full Label-Efficiency Curve (Legacy Backbone)

Table 9: **Legacy label-efficiency curve (F1w, legacy backbone).** FD001 at 5/10/20%: N=10 paired seeds; others N=5. Bold: $p < 0.05$; italic: $p < 0.15$. Under the canonical architecture the crossover does not survive (see section 6.2).

Subset	Budget	N	Pred-FT F1w	E2E F1w	paired p	collapses p/e
FD001	100%	5	0.391 ± 0.085	0.408 ± 0.119	0.84	0/0
	50%	5	0.391 ± 0.083	0.356 ± 0.074	0.27	0/0
	20%	10	0.276 ± 0.184	0.312 ± 0.102	0.57	2/0
	10%	10	$\mathbf{0.291 \pm 0.120}$	0.133 ± 0.164	**0.023**	0/4
	5%	10	$\mathit{0.229 \pm 0.141}$	0.124 ± 0.201	*0.114*	1/7
FD002	100%	5	0.315 ± 0.097	$\mathbf{0.426 \pm 0.046}$	**0.038** (E2E wins)	0/0
	10%	5	0.258 ± 0.059	0.259 ± 0.048	0.98	0/0
	5%	5	$\mathit{0.289 \pm 0.120}$	0.216 ± 0.133	*0.070*	0/0
FD003 (200 ep)	**100%**	5	$\mathbf{0.270 \pm 0.059}$	0.123 ± 0.166	**0.043**	0/2
	10%	5	0.043 ± 0.059	0.096 ± 0.079	0.22	3/1
	5%	5	0.062 ± 0.082	0.009 ± 0.021	0.25	1/4

F Extended Results

Per-seed raw results for each table are available in the code repository as JSON files with per-horizon AUROC, precision, recall breakdowns at each horizon interval.

G PA-F1 Inflation

PA-F1 (Point-Adjusted F1) credits an entire anomaly segment as correctly predicted if any single timestep within it exceeds the threshold [Xu et al., 2022]. This protocol inflates reported F1 dramatically when anomaly segments are long and prevalence is non-trivial: the TSAD-Eval study [Schmidl et al., 2022] shows that a random detector can exceed $F_1 = 0.9$ PA on some datasets. We concretely demonstrate this by contrasting PA-F1 and non-PA F1 for FAM+Mahalanobis on our benchmarks: SMAP 0.793 PA vs. 0.038 non-PA, SMD 0.252 PA vs. 0.144 non-PA, PSM 0.813 PA vs. 0.085 non-PA. The gap in PA-F1 between FAM and MTS-JEPA remains large even under a random-baseline sanity check (a random-init encoder + Mahalanobis baseline achieves 0.604 ± 0.007 PA-F1 on SMAP; FAM is 0.79), so the PA-F1 margin is not purely inflation - but any single PA-F1 number should be read in conjunction with the corresponding non-PA number.

H Preprocessing Details

Dataset	Channels	Preprocessing	Context
C-MAPSS FD001-004	14 sensors (after drop)	per-subset min-max	cycle-as-patch
SMAP / MSL	25 / 55 (after drop)	z-score on train	100 steps
PSM	25 (after drop-constant)	pre-normalised	100 steps
SMD	38 per-machine	pre-normalised	100 steps
MBA ECG	2 leads	z-score on train	100 steps
GECCO water	9 quality sensors	z-score on train	512 steps
BATADAL SCADA	43 tank/pump/pressure	z-score on train	512 steps
PhysioNet 2012	36 clinical (ffill)	patient-pool stats	48 steps

The normalisation, channel-drop thresholds, and context lengths follow the conventions in the cited SSL and anomaly-detection benchmarks; specific numeric thresholds are in `fam-jepa/data/*.py`. For C-MAPSS we use the SELECTED_SENSORS subset from our preprocessing pipeline (14 sensors after removing near-constant channels). RUL cap is 125 cycles, following STAR.