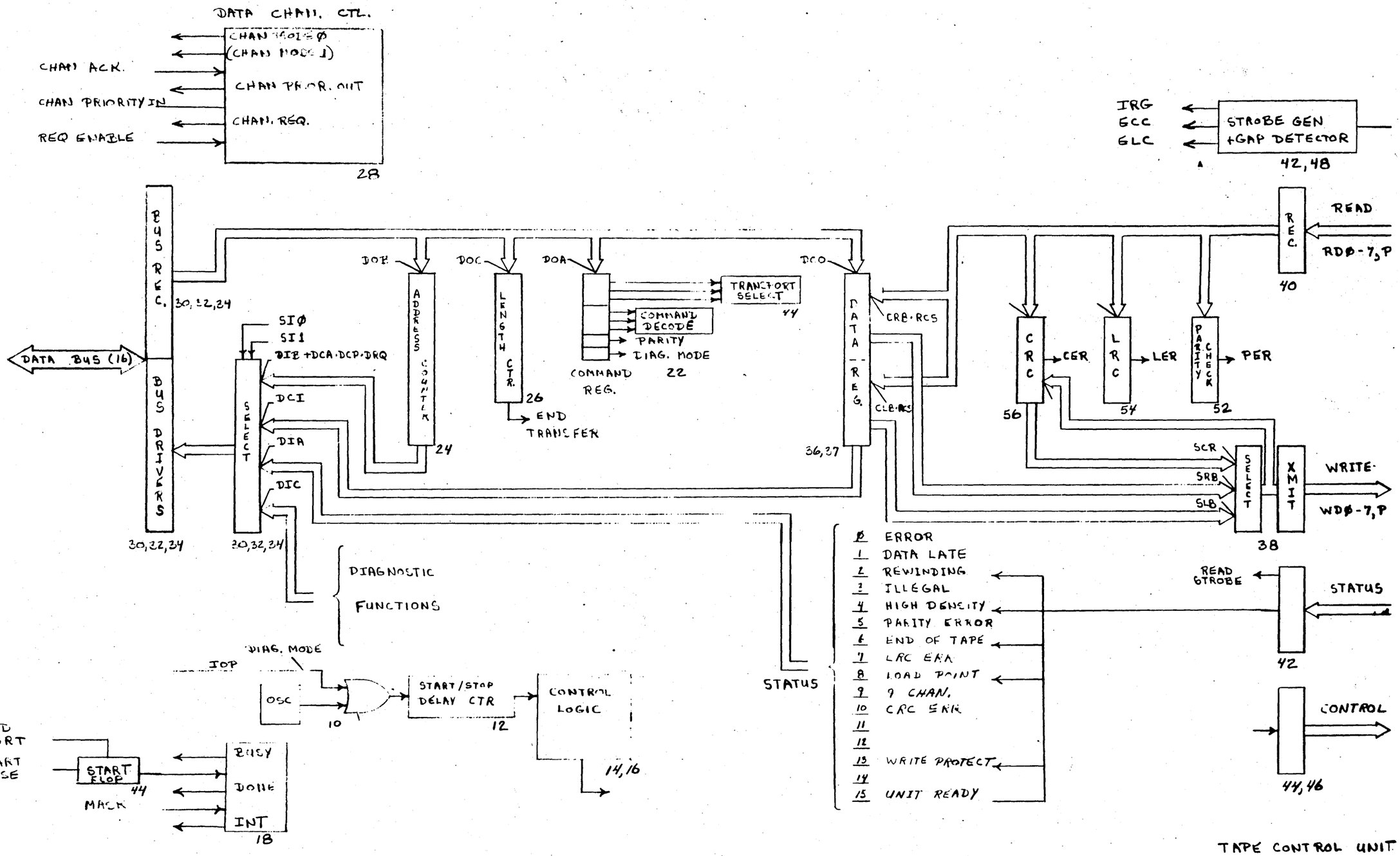

TAPE CONTROL UNIT
BLOCK DIAGRAM.

REV. B DJR 7/20/71

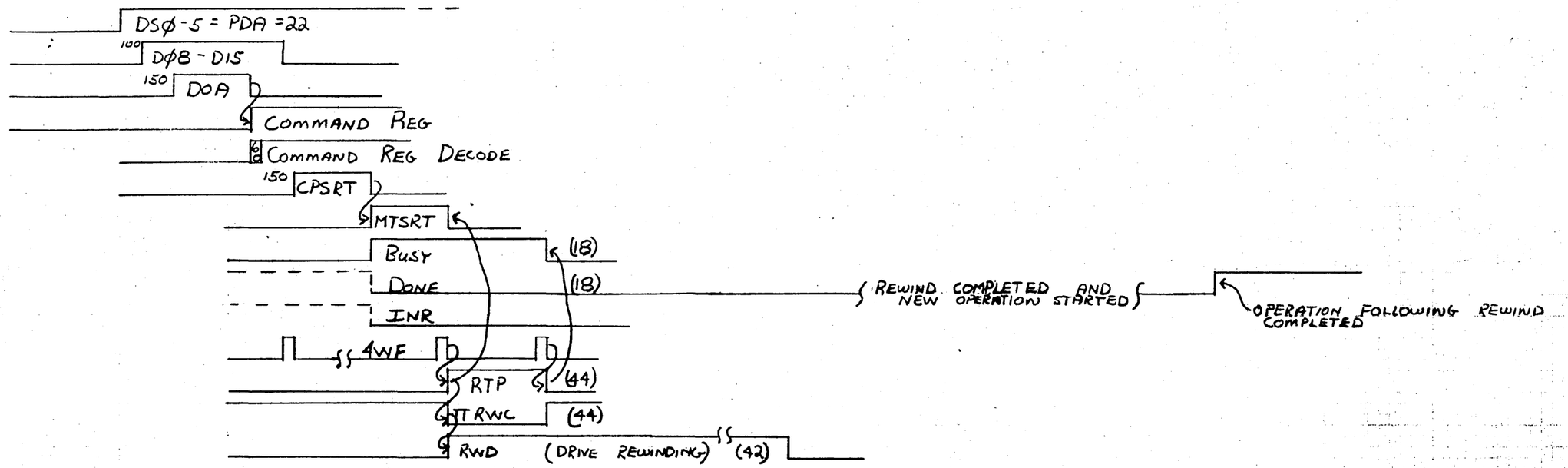

OBSOLETE Per ECO 881

DRAWN	DB	7/6
CHECK		
APPRV		
ENG		
PROMGR		

ENTREX INC.
169 MIDDLESEX TURNPIKE
BURLINGTON MASS 01803

TCU Timing Diagram

Rewind

SCALE	SIZE	CAT	SUB CAT	DRAWING NUMBER	DASH #	REV
				B-01070		

DO NOT SCALE PRINT | SHEET 1 OF

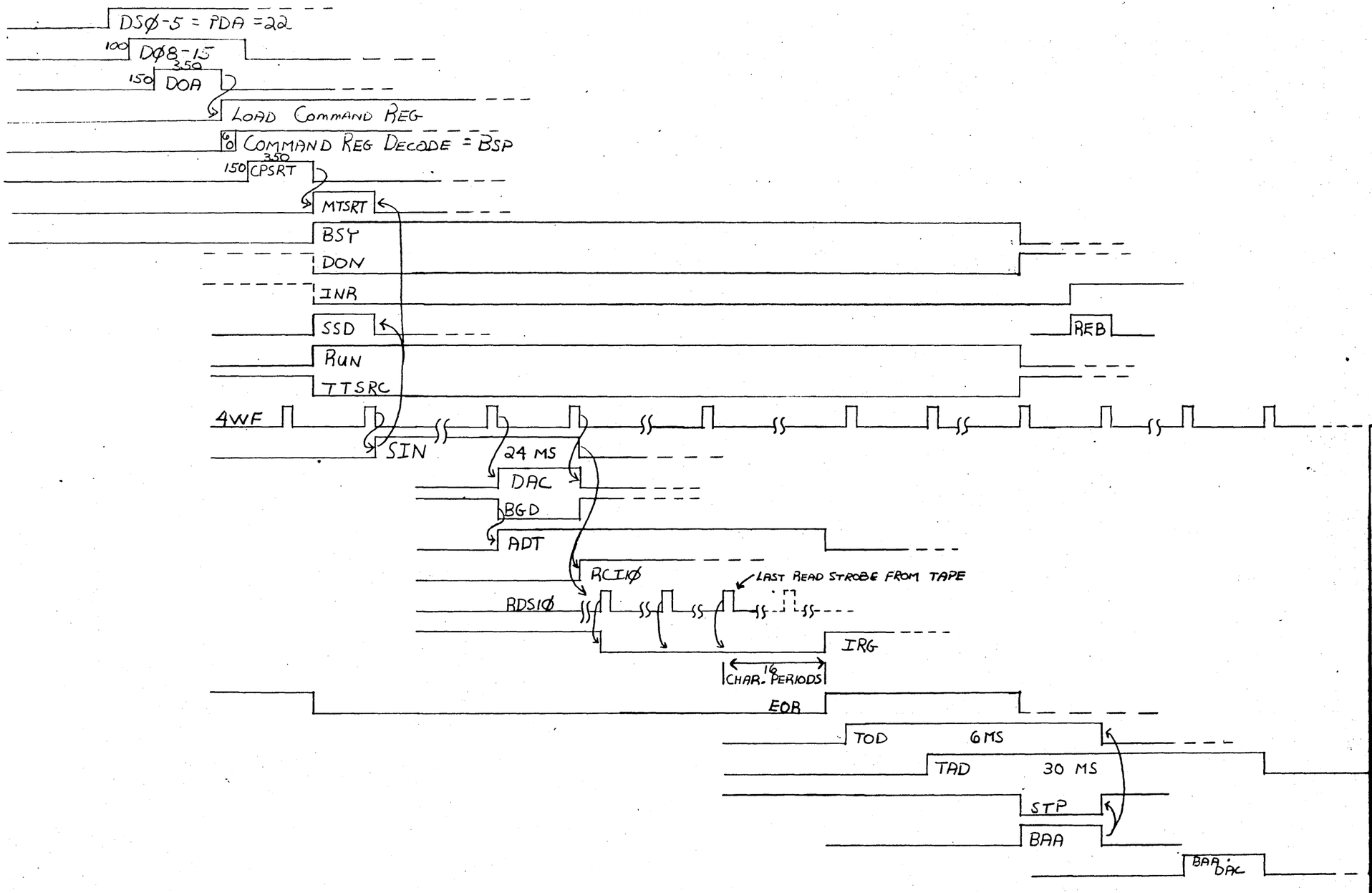

OBS

ENTREX INC.
168 MIDDLESEX TURNPIKE
BURLINGTON MASS 01803

TCU TIMING DIAGRAM

BACKSPACE

DRAWN	BY	DATE
	DB	7/27
CHECK		
APPRV		
ENG		
PROMGR		

SCALE	SIZE	CAT	SUB CAT	DRAWING NUMBER	DASH #	REV
				B-01070		8

DO NOT SCALE PRINT — SHEET 3 OF

2.78

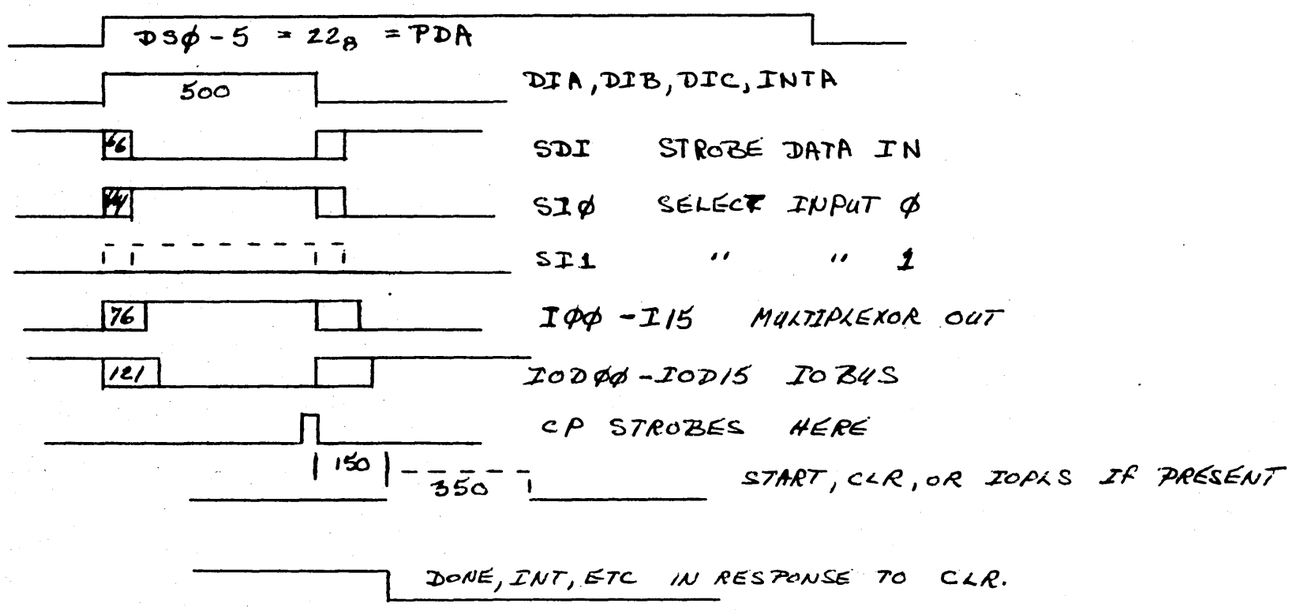

OBS

DRAWN	BY	DATE
	DJR	7/29/77
CHECK		
APPRV		
ENG		
PROMGR		

ENTREX INC.
168 MIDDLESEX TURNPIKE
BURLINGTON MASS 01803

TCU TIMING DIAG
READ STATUS (DIA), ADDRESS (DIB), OR DIAGNOSTICS (DIC)

SCALE	SIZE	CAT	SUB CAT	DRAWING NUMBER	DASH #	REV
				B-01070		

DO NOT SCALE PRINT | SHEET 2 OF

2.77

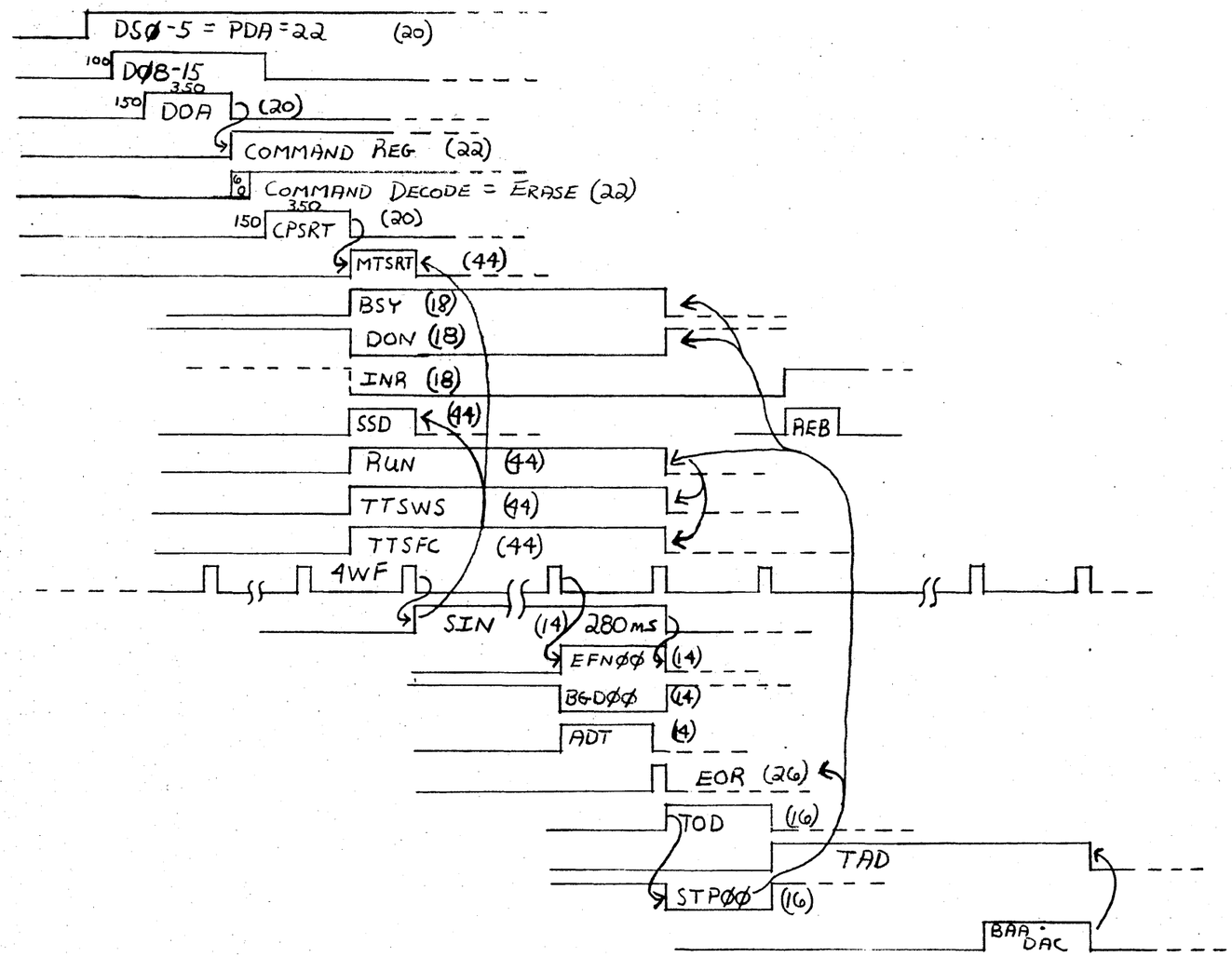

OBS

DRAWN	BY DB	DATE 7/26	ENTREX INC. 168 MIDDLESEX TURNPIKE BURLINGTON MASS 01803					
CHECK								
APPRV								
ENG								
PROMGR			TCU TIMING DIAGRAM ERASE					
			SCALE	SIZE	CAT	SUB CAT	DRAWING NUMBER	DASH #	REV
							B-01070		8
			DO NOT SCALE PRINT				SHEET 4 OF		

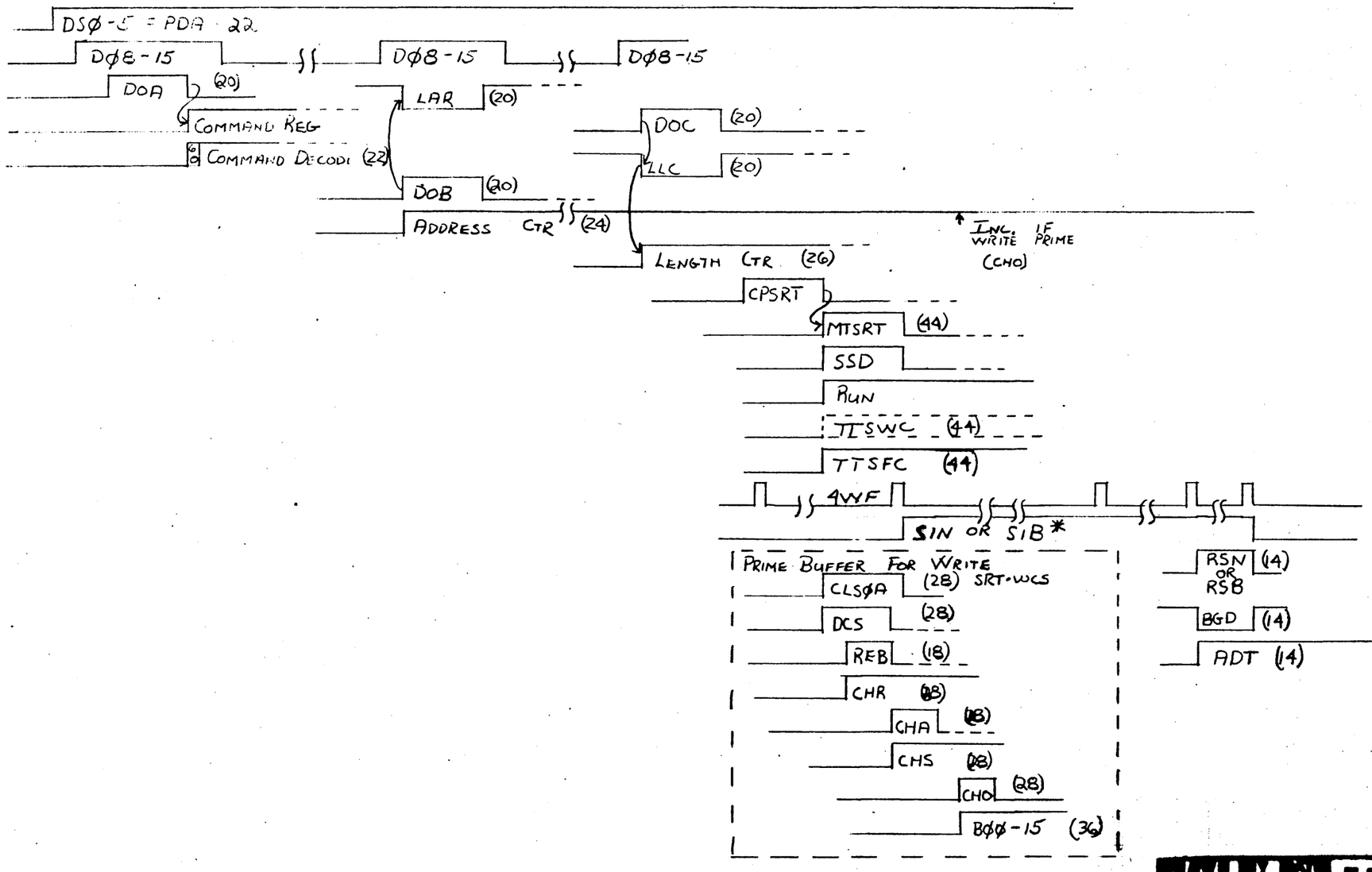

* SIN FOR READ = 24 MS
WRITE = 46 MS
SIB FOR READ = 120 MS
WRITE = 280 MS

OBS

	BY	DATE
CHECK		
APPRV		
ENG		
PROMGR		

ENTREX INC.
168 MIDDLESEX TURNPIKE
BURLINGTON MASS 01803

TCU TIMING DIAGRAM

READ/WRITE INIATE SEQUENCE

SCALE	SIZE	CAT	SUB CAT	DRAWING NUMBER	DASH ##	REV
				B-01070		8

DO NOT SCALE PRINT | SHEET 5 OF

TAPE SPEED IP.S / TRANS RATE	12.5 / 10K HZ	25 / 20K HZ	37.5 / 30K HZ
4WF (OCS)	40 / 25μs	80 / 12.5μs	120 / 8.3μs

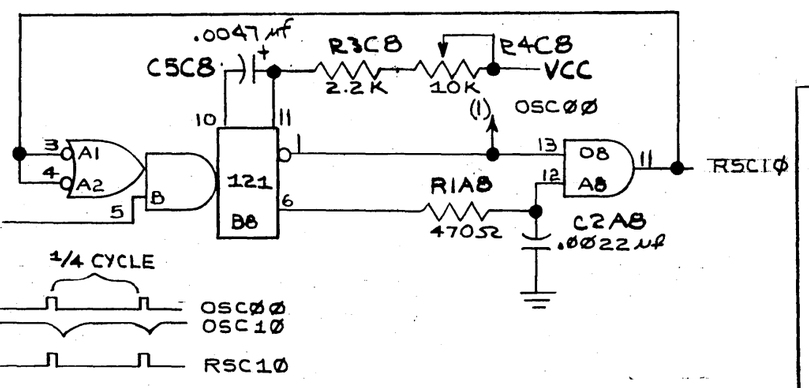

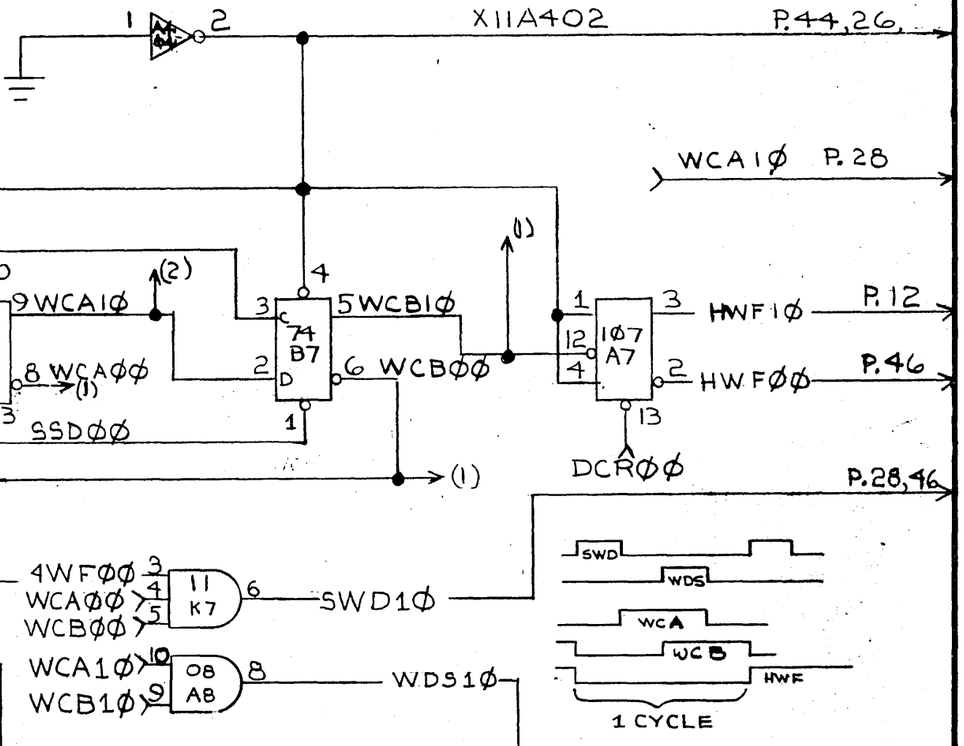

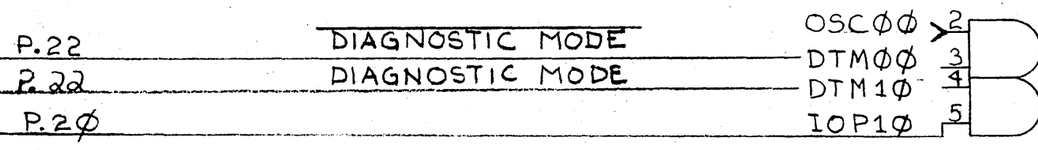

OBS

REVISIONS.			
B	REVISED SHT'S 26, 32, & 44 & 58		
B	ER # 35	5/6/72	DJR
C	ECO 225 SH P34	6/13/72	DJR

D	ECO 170 SH P42	6/19/72	DJR
E	ECO 288 SH P40	6/19/72	DJR
F	ECO 342 SH 44	6/19/72	DJR
G	ECO 363 SH 10, 14, 18, 20 22, 48	7/6/72	DJR

H	ECO 446 SH. P18-20-30-38-46	8/22/72	DJR
I	ECO 556 SH. 50	10/4/72	DJR
J	ECO 763 SH. 48	4/19/73	EB

REVISIONS			
NO.	DATE	BY	
G	ECO 363 7/6/72	DJR	
2			
3			
4			
5			

ENTREX INC.
113 HARTWELL AVE., LEXINGTON, MASS.

TAPE CONTROLLER
WRITE TIMING & MAIN OSC.

DRAWN BY	SCALE	MATERIAL
E. TOLEDO	++	
CHK'D	DATE 8-26-70	DRAWING NO. B-01070
TRACED	APP'D	

NATIONAL NO. 185 —11X17

2.81

CONFIDENTIAL
THE MATERIAL CONTAINED HEREIN IS PROPRIETARY TO ENTREX, INC. NO UNAUTHORIZED PERSON MAY VIEW THIS MATERIAL.

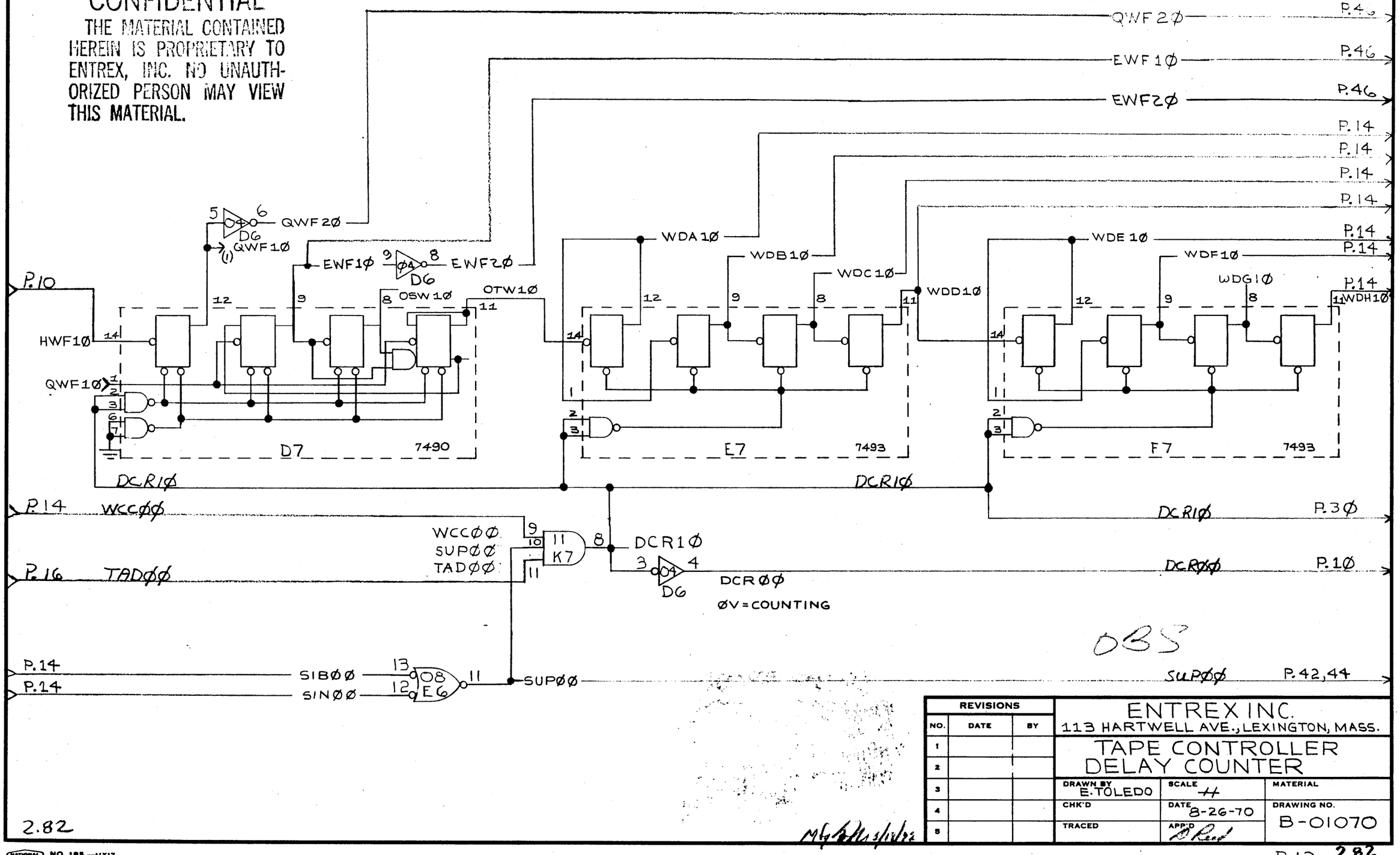

REVISIONS		
NO.	DATE	BY
1		
2		
3		
4		
5		

ENTREX INC.
113 HARTWELL AVE., LEXINGTON, MASS.

TAPE CONTROLLER
DELAY COUNTER

DRAWN BY E.TOLEDO	SCALE ++	MATERIAL
CHK'D	DATE 8-26-70	DRAWING NO. B-01070
TRACED	APP'D	

2.82

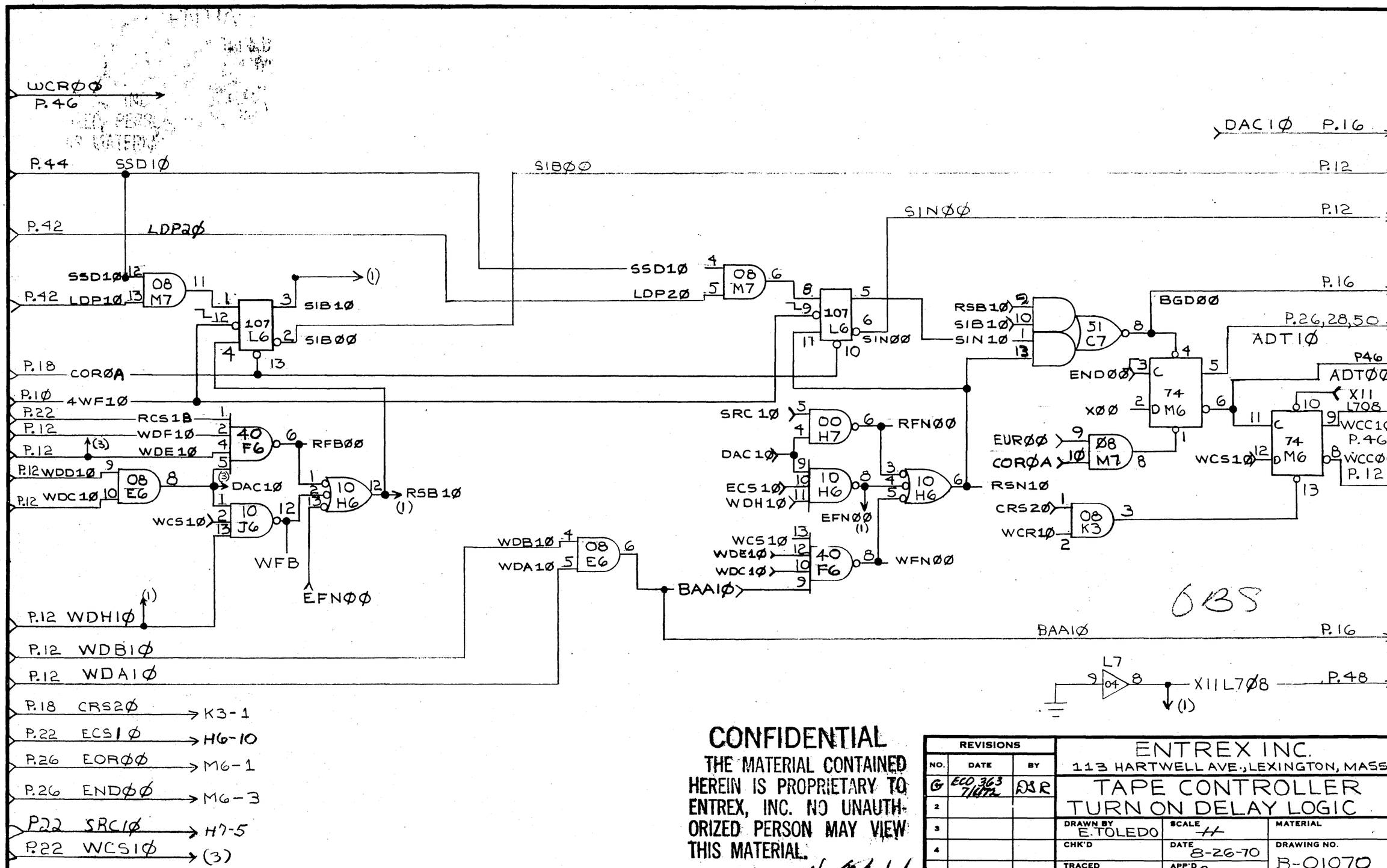

CONFIDENTIAL

THE MATERIAL CONTAINED HEREIN IS PROPRIETARY TO ENTREX, INC. NO UNAUTHORIZED PERSON MAY VIEW THIS MATERIAL.

REVISIONS		
NO.	DATE	BY
G	ECO 363 7/1/72	DSR
2		
3		
4		
5		

ENTREX INC.
113 HARTWELL AVE., LEXINGTON, MASS.

TAPE CONTROLLER
TURN ON DELAY LOGIC

DRAWN BY E. TOLEDO	SCALE -/-	MATERIAL
CHK'D	DATE 8-26-70	DRAWING NO. B-01070
TRACED	APP'D D Reed	

NO. 185 —11X17

P14 2.83

CONFIDENTIAL
THE MATERIAL CONTAINED HEREIN IS PROPRIETARY TO ENTREX, INC. NO UNAUTHORIZED PERSON MAY VIEW THIS MATERIAL.

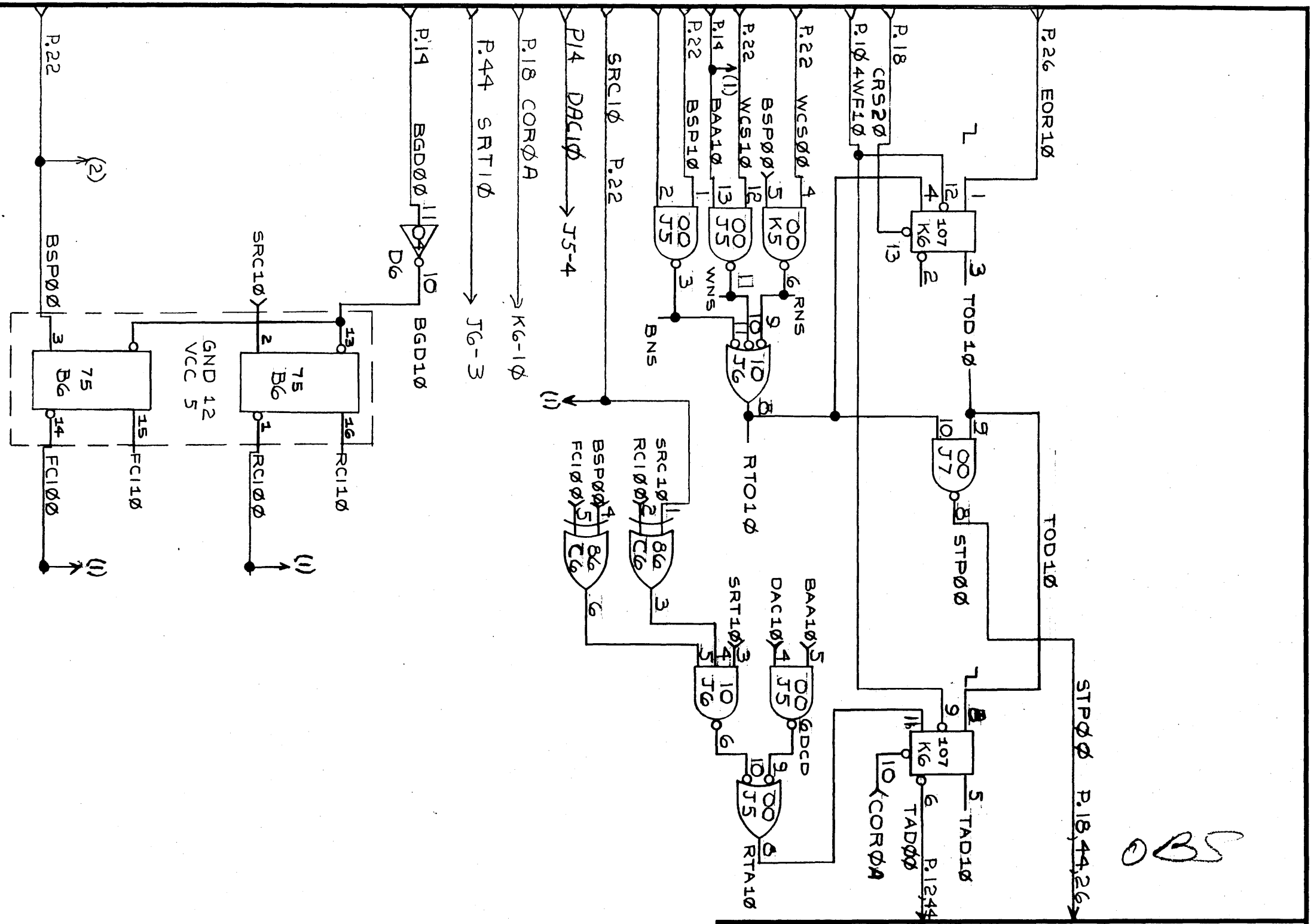

REVISIONS		
NO.	DATE	BY
1		
2		
3		
4		
5		

ENTREX INC.
113 HARTWELL AVE., LEXINGTON, MASS.

TAPE CONTROLLER TURN OFF DELAY LOGIC

DRAWN BY E.TOLEDO	SCALE 4	MATERIAL
CHK'D	DATE 8-25-70	DRAWING NO. B-01070
TRACED	APP'D D Reed	

Mfg [illegible] 2/15/72

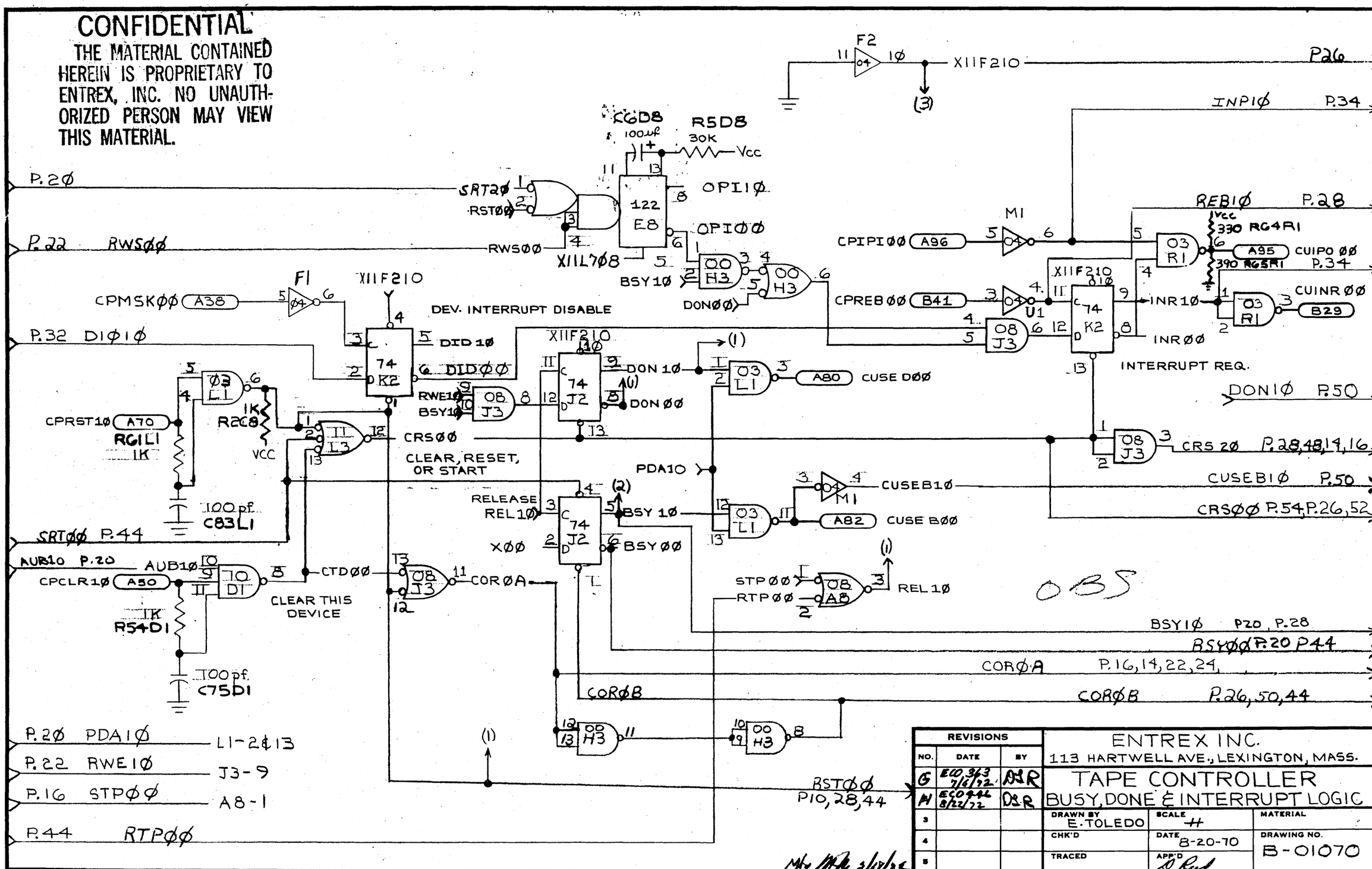
CONFIDENTIAL
THE MATERIAL CONTAINED HEREIN IS PROPRIETARY TO ENTREX, INC. NO UNAUTHORIZED PERSON MAY VIEW THIS MATERIAL.
F2
X11F210
P26
INP1Ø P.34
C6D8 100uf
R5D8 30K
Vcc
P.2Ø
SRT2Ø
RSTØØ
122 E8
OPI1Ø
OPIØØ
P.22 RWSØØ
RWSØØ
X11L7Ø8
BSY1Ø
DONØØ
M1
CPIPIØØ A96
REB1Ø P.28
330 RG4R1
A95 CUIPO ØØ
390 RG5R1
P.34
CPREBØØ B41
U1
INR1Ø
CUINRØØ
B29
INRØØ
INTERRUPT REQ.
CPMSKØØ A38
F1
X11F210
DEV. INTERRUPT DISABLE
P.32 DIØ1Ø
DID1Ø
DIDØØ
74 K2
RWE1Ø
BSY1Ø
DON1Ø
DONØØ
A80 CUSE DØØ
DON1Ø P.50
CPRST1Ø A70
RG1L1 1K
R2C8 1K
VCC
CRSØØ
CLEAR, RESET, OR START
CRS2Ø P.28,48,14,16
PDA1Ø
CUSEB1Ø P.50
CUSEB1Ø
CRSØØ P.54,P.26,52
RELEASE REL1Ø
BSY1Ø
A82 CUSE BØØ
XØØ
BSYØØ
100pf C83L1
SRTØØ P.44
AUB1Ø P.20
AUB1Ø
CPCLR1Ø A50
CTDØØ
CLEAR THIS DEVICE
COR0A
STPØØ
RTPØØ
REL1Ø
OBS
R54D1 1K
100pf C75D1
BSY1Ø P20, P.28
BSYØØ P.20 P44
COR0A P.16,14,22,24,
COR0B
COR0B P.26,50,44
P.2Ø PDA1Ø L1-2&13
P.22 RWE1Ø J3-9
P.16 STPØØ A8-1
P.44 RTPØØ
RSTØØ P10,28,44
REVISIONS
NO. DATE BY
G ECO 363 7/6/72 DSR
H ECO 446 8/22/72 DSR
ENTREX INC.
113 HARTWELL AVE., LEXINGTON, MASS.
TAPE CONTROLLER
BUSY, DONE & INTERRUPT LOGIC
DRAWN BY E. TOLEDO
SCALE #
MATERIAL
CHK'D
DATE 8-20-70
DRAWING NO. B-01070
TRACED
APP'D
NO. 185 —11X17

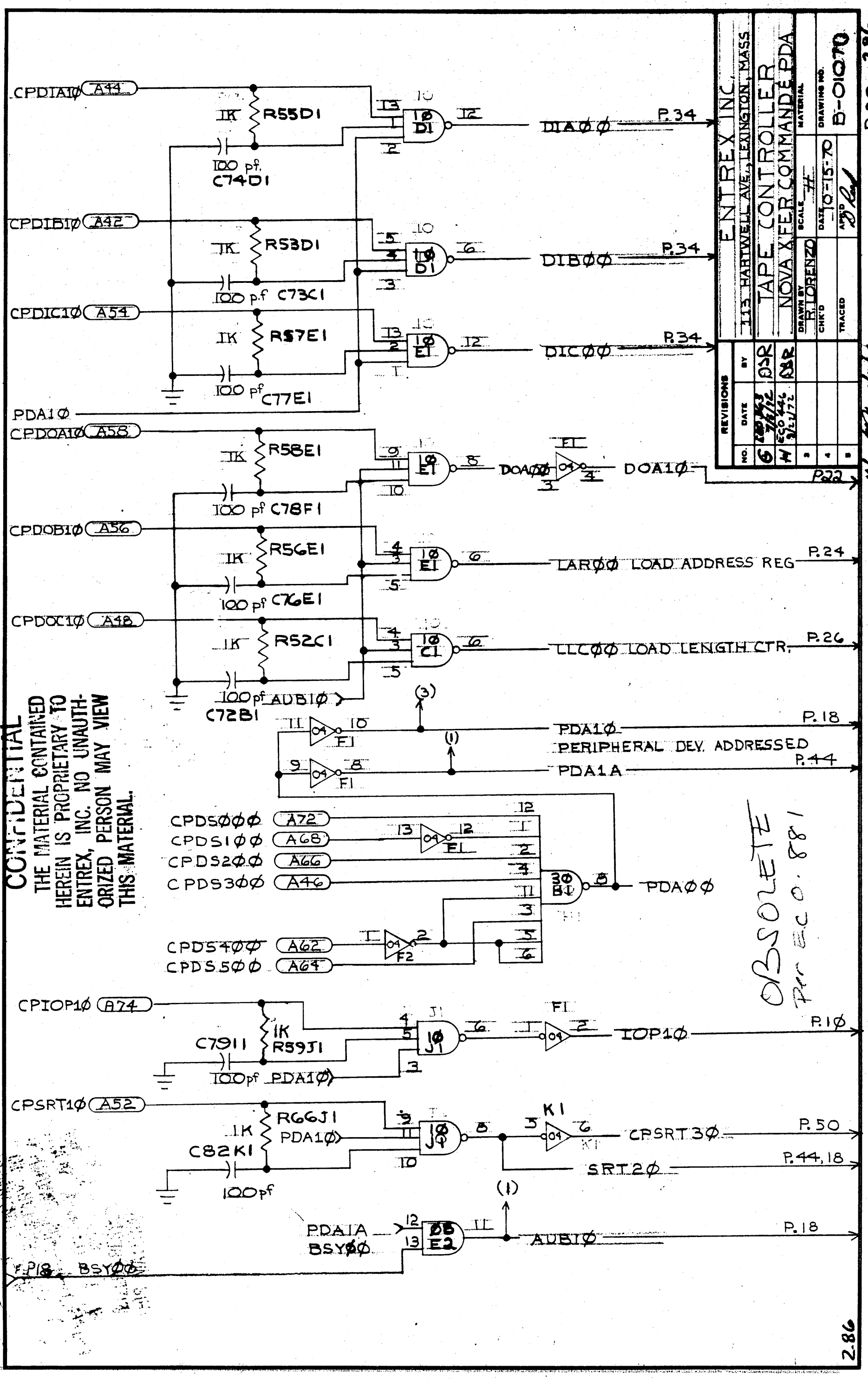
CPDIA1Ø A44
1K R55D1
100 pf. C74D1
CPDIB1Ø A42
1K R53D1
100 p.f C73C1
CPDIC1Ø A54
1K R57E1
100 pf C77E1
PDA1Ø
CPDOA1Ø A58
1K R58E1
100 pf C78F1
CPDOB1Ø A56
1K R56E1
100 pf C76E1
CPDOC1Ø A48
1K R52C1
100 pf AUB1Ø
C72B1
D1
E1
C1
F1
F2
J1
K1
B1
DIAØØ P.34
DIBØØ P.34
DICØØ P.34
DOAØØ
DOA1Ø P22
LARØØ LOAD ADDRESS REG P.24
LLCØØ LOAD LENGTH CTR. P.26
PDA1Ø P.18
PERIPHERAL DEV. ADDRESSED
PDA1A P.44
CPDSØØØ A72
CPDS1ØØ A68
CPDS2ØØ A66
CPDS3ØØ A46
CPDS4ØØ A62
CPDS5ØØ A64
PDAØØ
CPIOP1Ø A74
C79I1 1K R59J1
100pf PDA1Ø
IOP1Ø P.1Ø
CPSRT1Ø A52
1K RG6J1
C82K1 100pf
PDA1Ø
CPSRT3Ø P.50
SRT2Ø P.44,18
PDA1A
BSYØØ
AUB1Ø P.18
P.18 BSYØØ
ENTREX INC.
113 HARTWELL AVE., LEXINGTON, MASS.
TAPE CONTROLLER
NOVA X'FER COMMANDER PDA
DRAWN BY R. LORENZO
CHK'D
TRACED
SCALE
DATE 10-15-70
APP'D
MATERIAL
DRAWING NO. B-01070
REVISIONS
NO. DATE BY
6 7/8/72 DSR
5 EC0446 9/27/72 DSR
P.20 2.86
CONFIDENTIAL
THE MATERIAL CONTAINED HEREIN IS PROPRIETARY TO ENTREX, INC. NO UNAUTHORIZED PERSON MAY VIEW THIS MATERIAL.
OBSOLETE
Rev. Ec. 0. 88
2.86

CONFIDENTIAL
THE MATERIAL CONTAINED HEREIN IS PROPRIETARY TO ENTREX, INC. NO UNAUTHORIZED PERSON MAY VIEW THIS MATERIAL.

REVISIONS		
NO.	DATE	BY
A	2/25/72	AW
2		
3		
4		
5		

ENTREX INC.
113 HARTWELL AVE., LEXINGTON, MASS.

TAPE CONTROLLER
LENGTH COUNTER & INC. LOGIC

DRAWN BY E. TOLEDO	SCALE 4"	MATERIAL	
CHK'D	DATE 8-24-70	DRAWING NO.	B-01070
TRACED	APP'D		

P. 26 2.89

P.50 ILCØØ

P48 IRG1Ø
P.22 ECSØØ
P.14 (2) ADT1Ø
P.22 ECS1Ø
4WF1Ø
P.10 P.18 XIIA402
P.16 STPØØ
P.18 CRSØØ (1)

ØØ D5 · 10 A6 · ØØ D5 · 74 E4 · 08 E6

EOR1Ø P.16
EORØØ P.14
STP. CRS

P.42 RDS1Ø
P22 RCS1B
ADT1Ø
P22 WCS1Ø
P10 WDS1Ø
P.28 XIIH504

10 A6 · 10 A6 · ØØ D5 · 107 E5

CDS1Ø
ILB1Ø
ØØ D4 (1) INL1Ø
ODD1Ø P.28,38, 32
ODDØØ
CRSØØ
CCLØØ
ØØ D4 ILB1Ø (1)
ODDØØ P.28,

XIIW11Ø P.32
INL1Ø
P34 D151Ø
P34 14
P34 13
P34 12
LLCØØ
P.21 COR1Ø

193 T2 · 193 W2 · 193 P2

L151Ø 14 13 12
D111Ø 1Ø Ø9 Ø8 LLCØØ
L111Ø 1Ø Ø9 Ø8
DØ71Ø Ø6 Ø5 Ø4 LLCØØ
L071Ø Ø6 Ø5 Ø4
ENDØØ P.14

P.34
P18 X11F210
P20 LLCØØ
09 · 74 L2
CCL1Ø
P.3Ø DØØ1Ø
P.18 CORØB (1)
P.28 CHOØØ

CHIØØ
CHOØØ
10 A1
INCREMENT ADDRESS
INA1Ø P24

P30 DØ41Ø
P30 51Ø
P32 61Ø
P32 71Ø
P32 81Ø
P32 91Ø
P32 1Ø1Ø
P32 111Ø

NO. 185—11X17

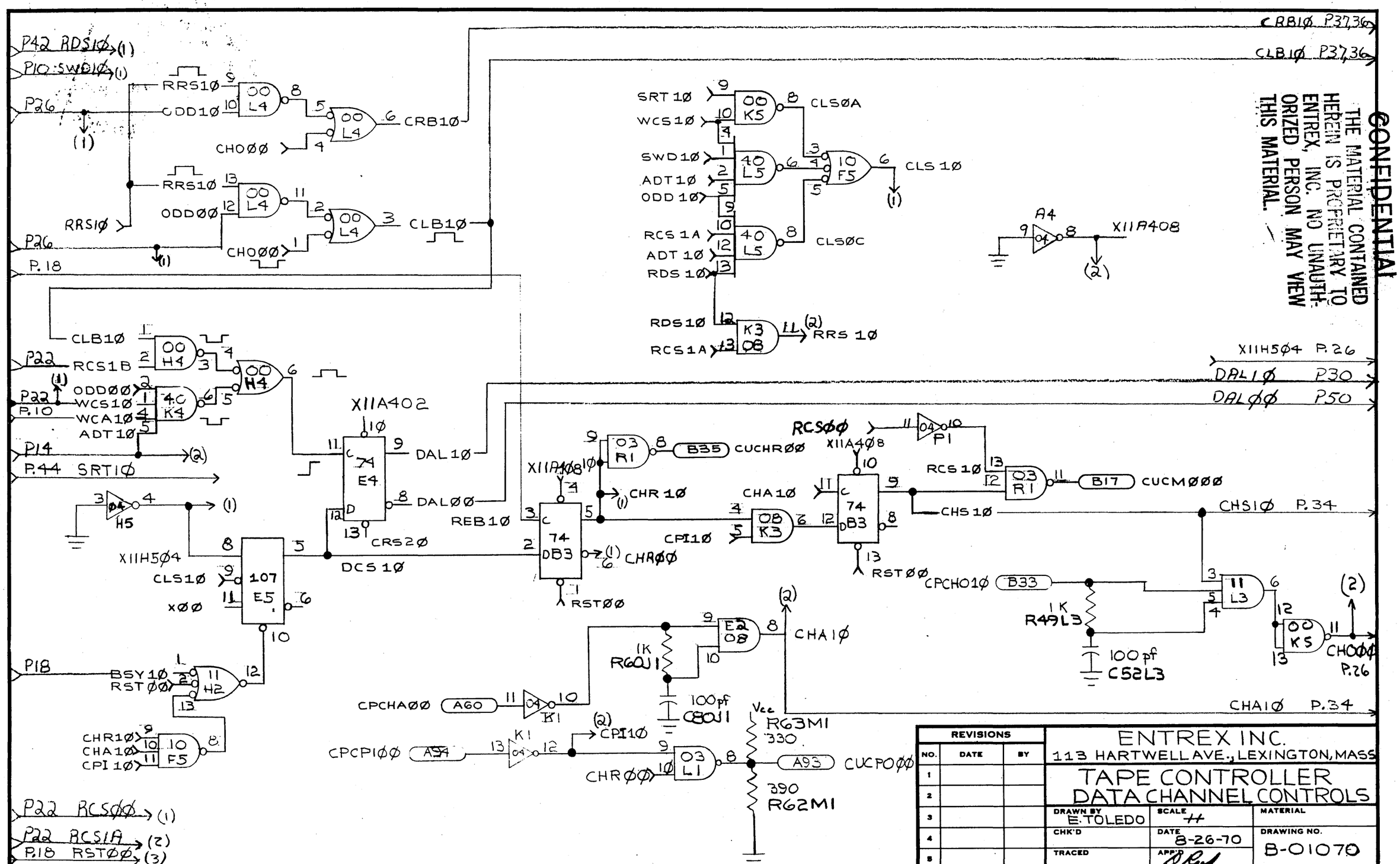

CONFIDENTIAL
THE MATERIAL CONTAINED HEREIN IS PROPRIETARY TO ENTREX, INC. NO UNAUTHORIZED PERSON MAY VIEW THIS MATERIAL.

REVISIONS		
NO.	DATE	BY
1		
2		
3		
4		
5		

ENTREX INC.
113 HARTWELL AVE., LEXINGTON, MASS

TAPE CONTROLLER
DATA CHANNEL CONTROLS

DRAWN BY E. TOLEDO	SCALE #	MATERIAL
CHK'D	DATE 8-26-70	DRAWING NO. B-01070
TRACED	APP'D D Reed	

CONFIDENTIAL
THE MATERIAL CONTAINED HEREIN IS PROPRIETARY TO ENTREX, INC. NO UNAUTHORIZED PERSON MAY VIEW THIS MATERIAL.

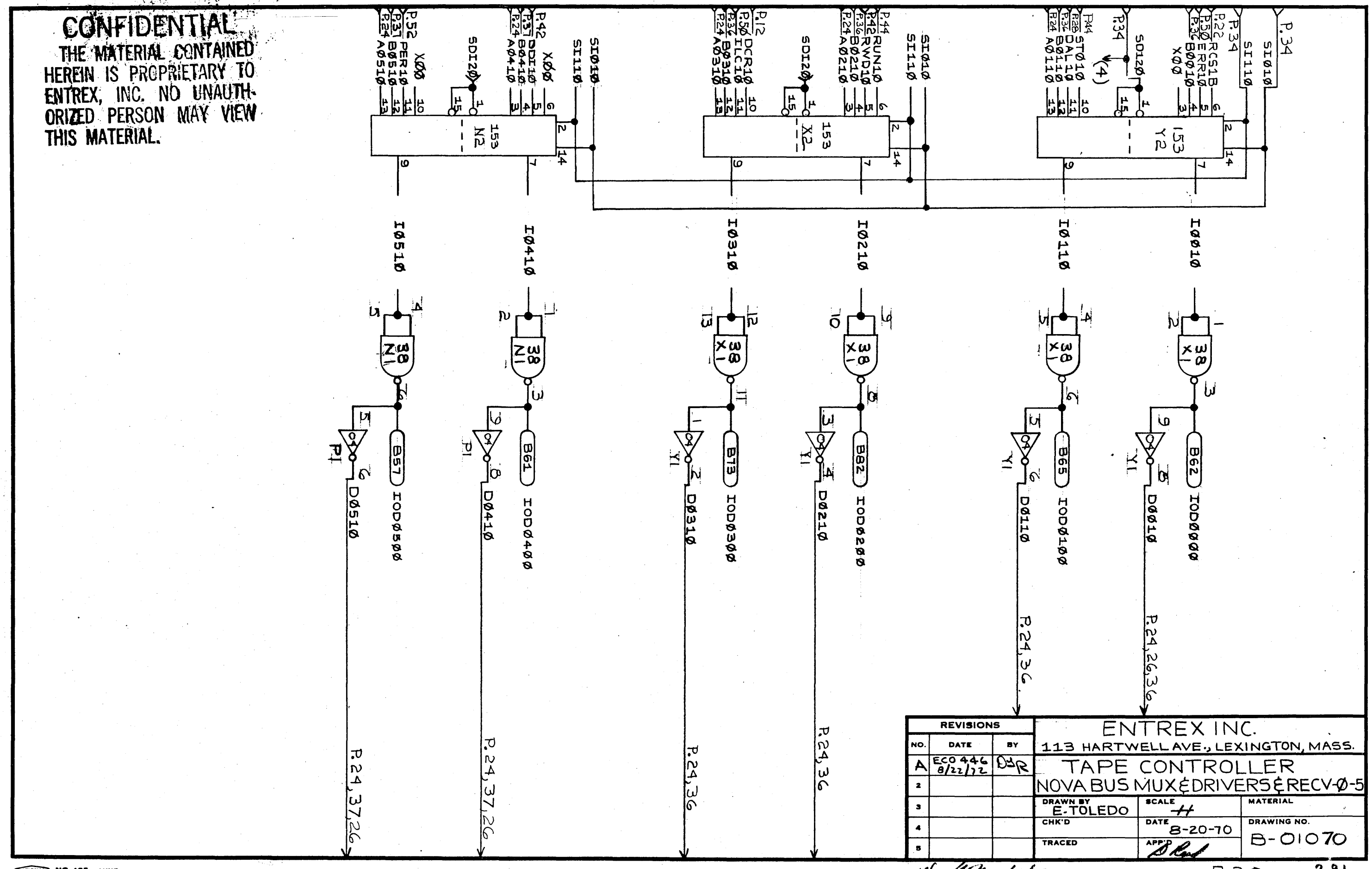

REVISIONS			
NO.	DATE	BY	
A	ECO 446 8/22/72	DJR	
2			
3			
4			
5			

ENTREX INC.
113 HARTWELL AVE., LEXINGTON, MASS.

TAPE CONTROLLER
NOVA BUS MUX & DRIVERS & RECV-Ø-5

DRAWN BY	SCALE	MATERIAL
E-TOLEDO	H	
CHK'D	DATE 8-20-70	DRAWING NO. B-01070
TRACED	APP'D	

Mfg 8/18/72

CONFIDENTIAL
THE MATERIAL CONTAINED HEREIN IS PROPRIETARY TO ENTREX, INC. NO UNAUTHORIZED PERSON MAY VIEW THIS MATERIAL.

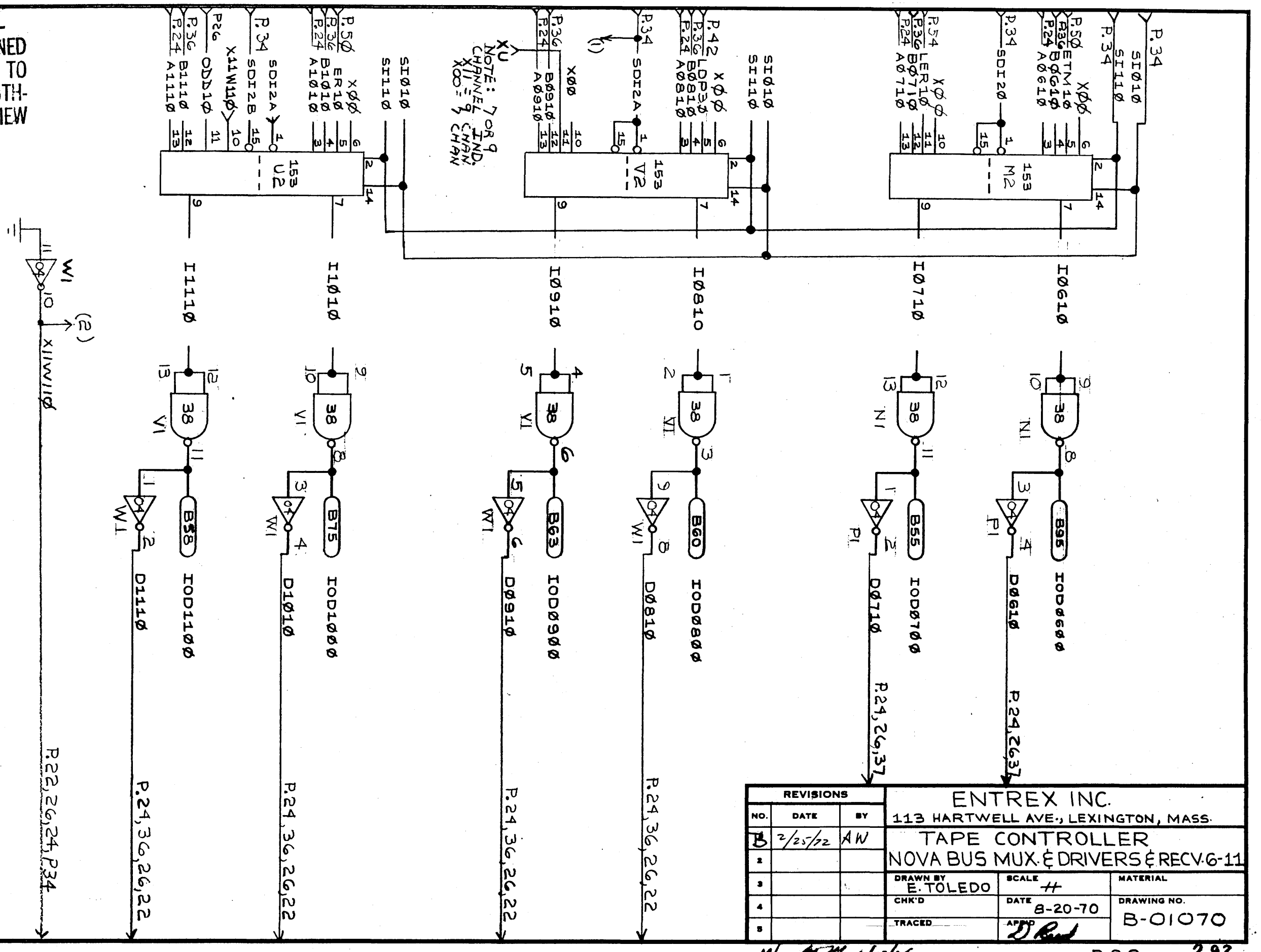

REVISIONS		
NO.	DATE	BY
B	2/25/72	AW
2		
3		
4		
5		

ENTREX INC.
113 HARTWELL AVE., LEXINGTON, MASS.

TAPE CONTROLLER
NOVA BUS MUX & DRIVERS & RECV 6-11

DRAWN BY	SCALE	MATERIAL
E. TOLEDO	#	
CHK'D	DATE 8-20-70	DRAWING NO. B-01070
TRACED	APPD	

Mfg 2/10/72

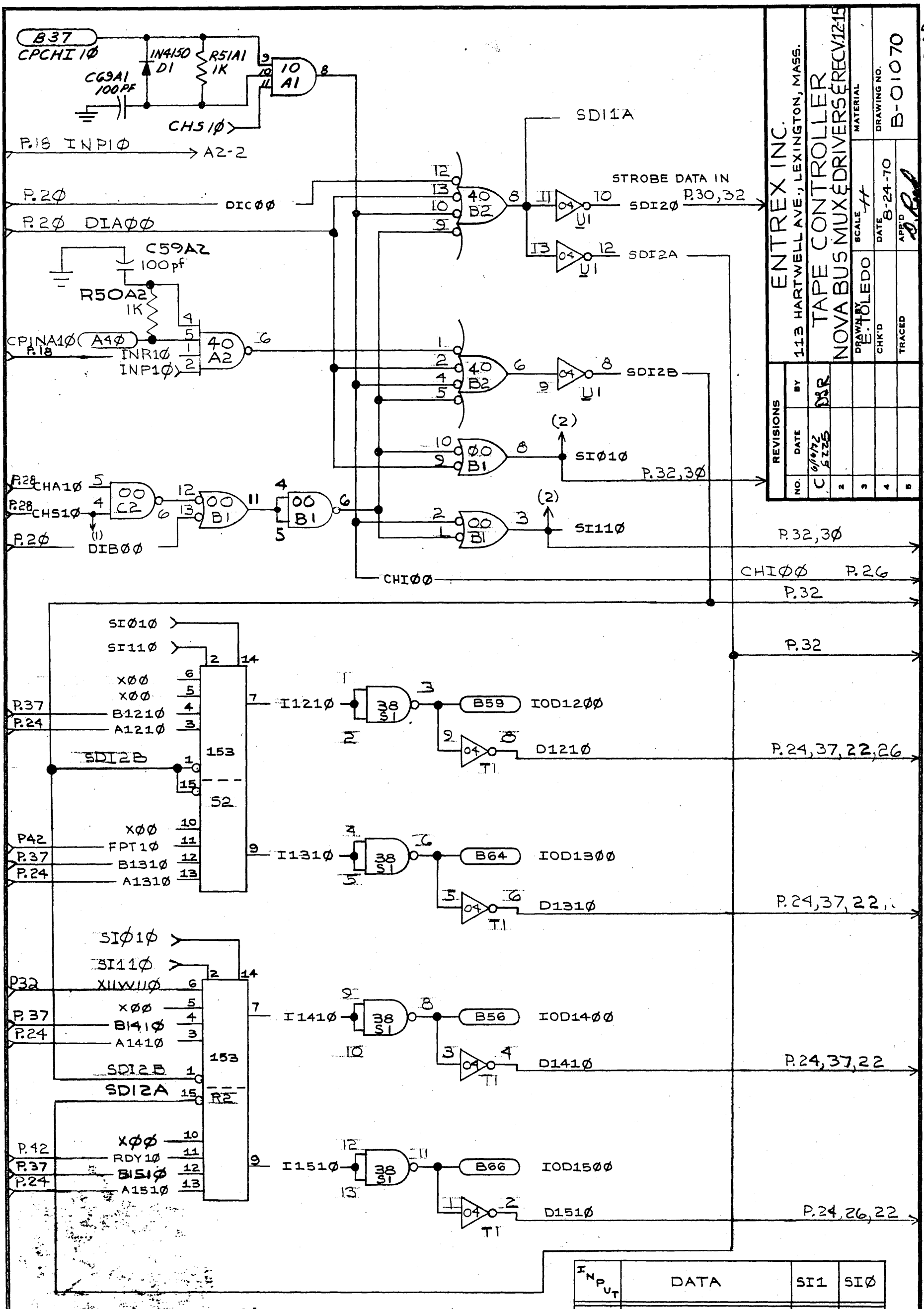

INPUT	DATA	SI1	SIØ
Ø	DEV. ADD	Ø	Ø
	DIAG. DATA	Ø	Ø
1	STATUS	Ø	1
2	INPUT DATA	1	Ø
3	MEM. ADD	1	1
	ADD. RESIDUE	1	1

CONFIDENTIAL
THE MATERIAL CONTAINED HEREIN IS PROPRIETARY TO ENTREX, INC. NO UNAUTHORIZED PERSON MAY VIEW THIS MATERIAL.

NO. 185—11X17

CONFIDENTIAL
THE MATERIAL CONTAINED HEREIN IS PROPRIETARY TO ENTREX, INC. NO UNAUTHORIZED PERSON MAY VIEW THIS MATERIAL.

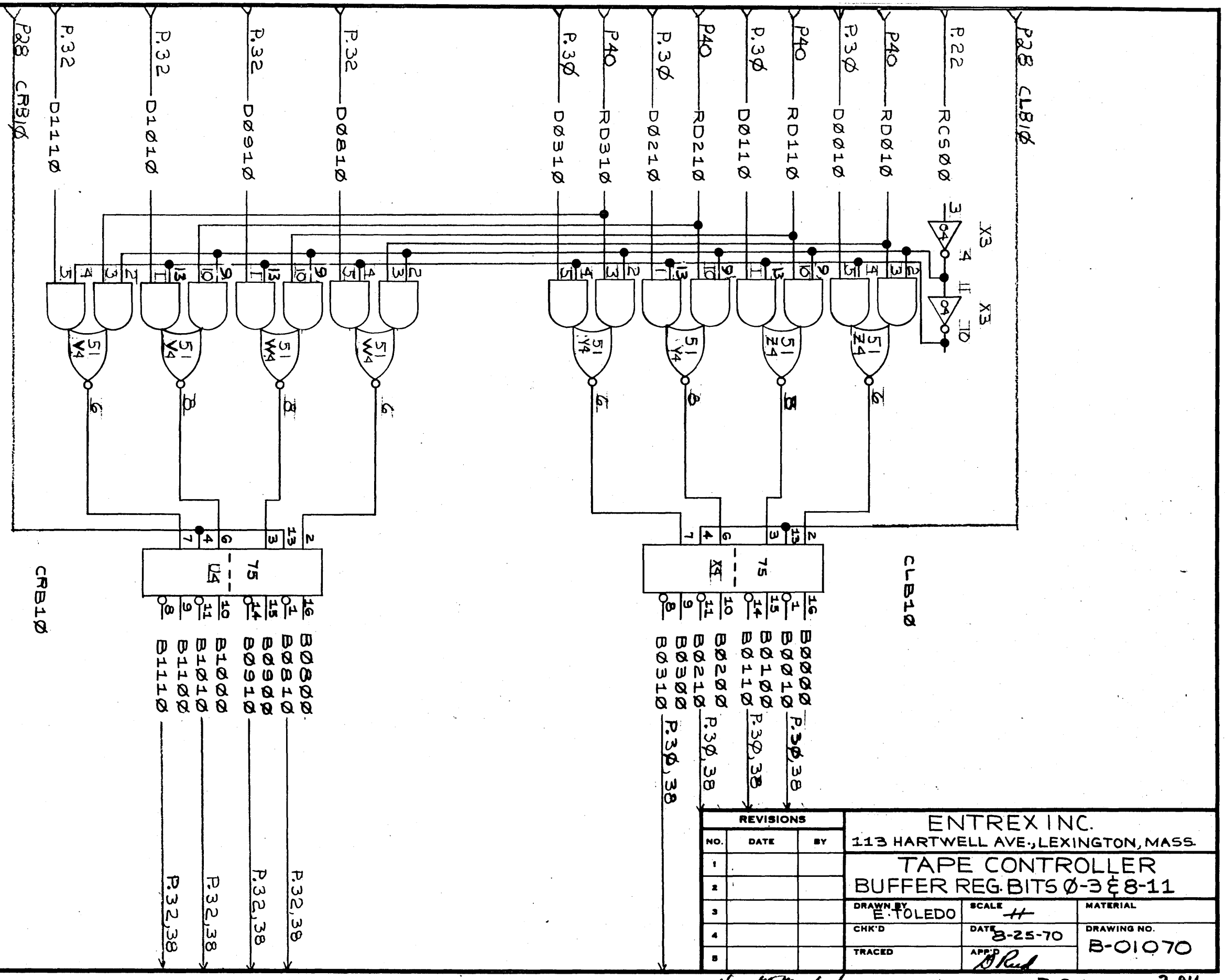

REVISIONS		
NO.	DATE	BY
1		
2		
3		
4		
5		

ENTREX INC.
113 HARTWELL AVE., LEXINGTON, MASS.

TAPE CONTROLLER
BUFFER REG. BITS Ø-3 & 8-11

DRAWN BY E. TOLEDO	SCALE H	MATERIAL
CHK'D	DATE 8-25-70	DRAWING NO. B-01070
TRACED	APP'D	

2.94

NO. 185—11X17

P. 36

2.94

CONFIDENTIAL
THE MATERIAL CONTAINED HEREIN IS PROPRIETARY TO ENTREX, INC. NO UNAUTHORIZED PERSON MAY VIEW THIS MATERIAL.

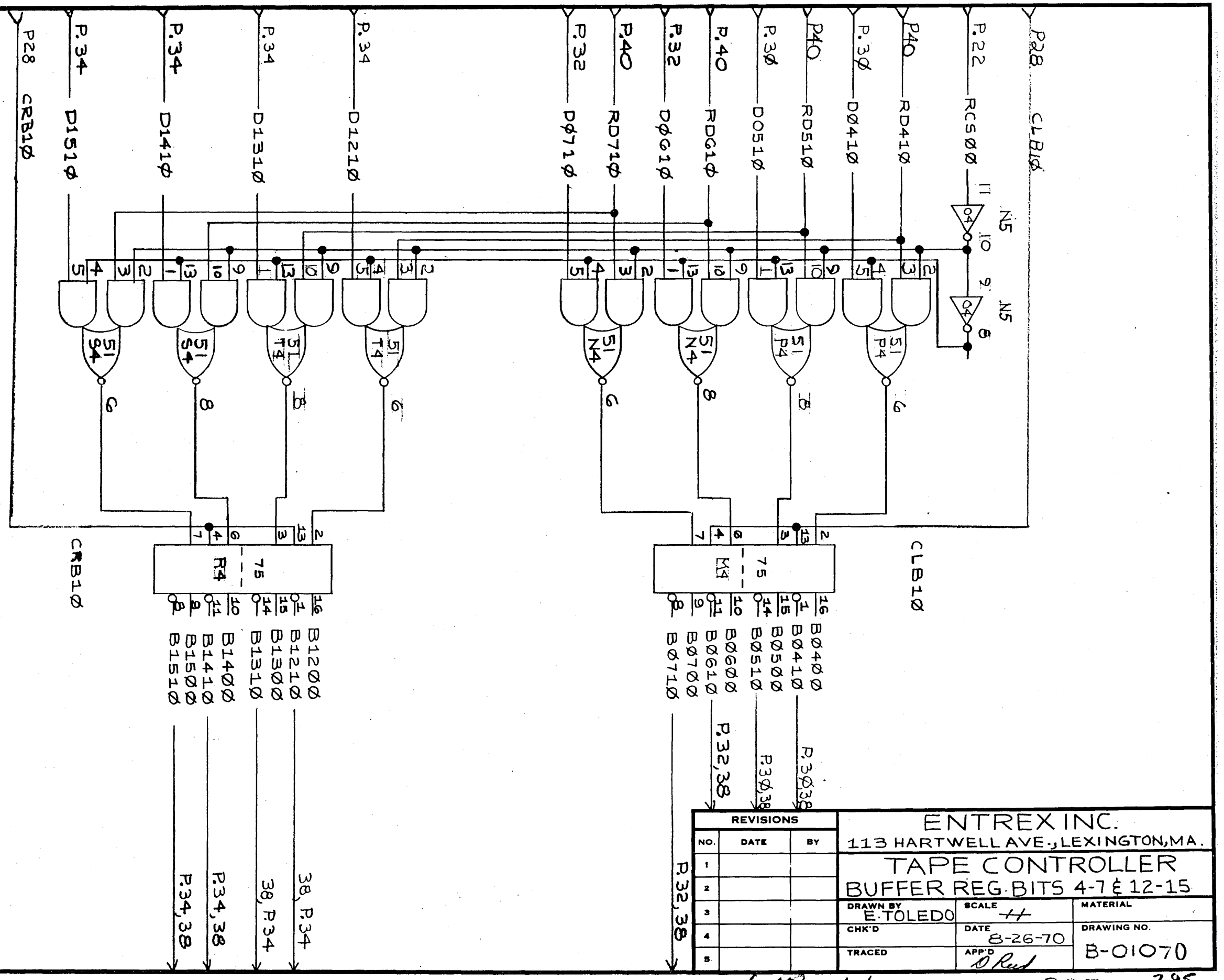

REVISIONS		
NO.	DATE	BY
1		
2		
3		
4		
5		

ENTREX INC.
113 HARTWELL AVE., LEXINGTON, MA.

TAPE CONTROLLER
BUFFER REG. BITS 4-7 & 12-15

DRAWN BY E. TOLEDO	SCALE +4	MATERIAL
CHK'D	DATE 8-26-70	DRAWING NO. B-01070
TRACED	APP'D D Reed	

P.46 SCRØØ
P26 ODD1Ø
P.56 CRØØØ
P.36 BØ81Ø
P.36 BØØ1Ø
P.56 CR1ØØ
P.36 BØ91Ø
P.36 BØ11Ø
P.56 CR21Ø
P.36 B1Ø1Ø
P.36 BØ21Ø
P.56 CR3ØØ
P.36 B111Ø
P.36 BØ31Ø
P.56 CR41Ø
P.37 B121Ø
P.37 BØ41Ø
P.56 CR5ØØ
P.37 B131Ø
P.37 BØ51Ø
P.56 CR6ØØ
P.37 B141Ø
P.37 BØ61Ø
P.56 CR7ØØ
P.37 B151Ø
P.37 BØ71Ø

10 9 N.7 8 SLB1Ø

153 (14 A B2) — 0 1 2 3 — 15 10 0 1 2 3 — 7 9

153 (14 2) — 6 5 4 3 — 1 15 10 11 12 13 — 7 9

153 (14 2) — 6 5 4 3 — 1 15 10 11 12 13 — 7 9

153 (14 2) — 6 5 4 3 — 1 15 10 11 12 13 — 7 9

S6

R5

R6

WD0 P.56,52
WD1 P.52,56
WD2 P.52,56
WD3 P.52,56
WD4 P.52,56
WD5 P.52,56
WD6 P.52,56
WD7 P.52,56

12 13 38 T8 11 D-H D-J TTWDØTØ
9 10 38 T8 8 D-K D-L TTWD1TØ
1 2 38 T8 3 D-M D-N TTWD2TØ
4 5 38 T8 6 D-P D-R TTWD3TØ
12 13 38 S8 11 D-S D-T TTWD4TØ
9 10 38 S8 8 D-U D-V TTWD5TØ
1 2 38 S8 3 D-W D-X TTWD6TØ
4 5 38 S8 D-Y D-Z TTD7TØ

ENTREX INC.
113 HARTWELL AVE., LEXINGTON, MASS.
TAPE CONTROLLER
TRANSPORT WRITE MUX & DRIVERS
DRAWN BY E. TOLEDO
CHK'D
TRACED
SCALE —
DATE 8-26-70
APP'D
MATERIAL
DRAWING NO. B-01070
P. 38
2.96

REVISIONS

NO.	DATE	BY
A	ECO 446 10/27/71	DSR
2		
3		
4		
5		

4/11/72

CONFIDENTIAL
THE MATERIAL CONTAINED HEREIN IS PROPRIETARY TO ENTREX, INC. NO UNAUTHORIZED PERSON MAY VIEW THIS MATERIAL.

2.96

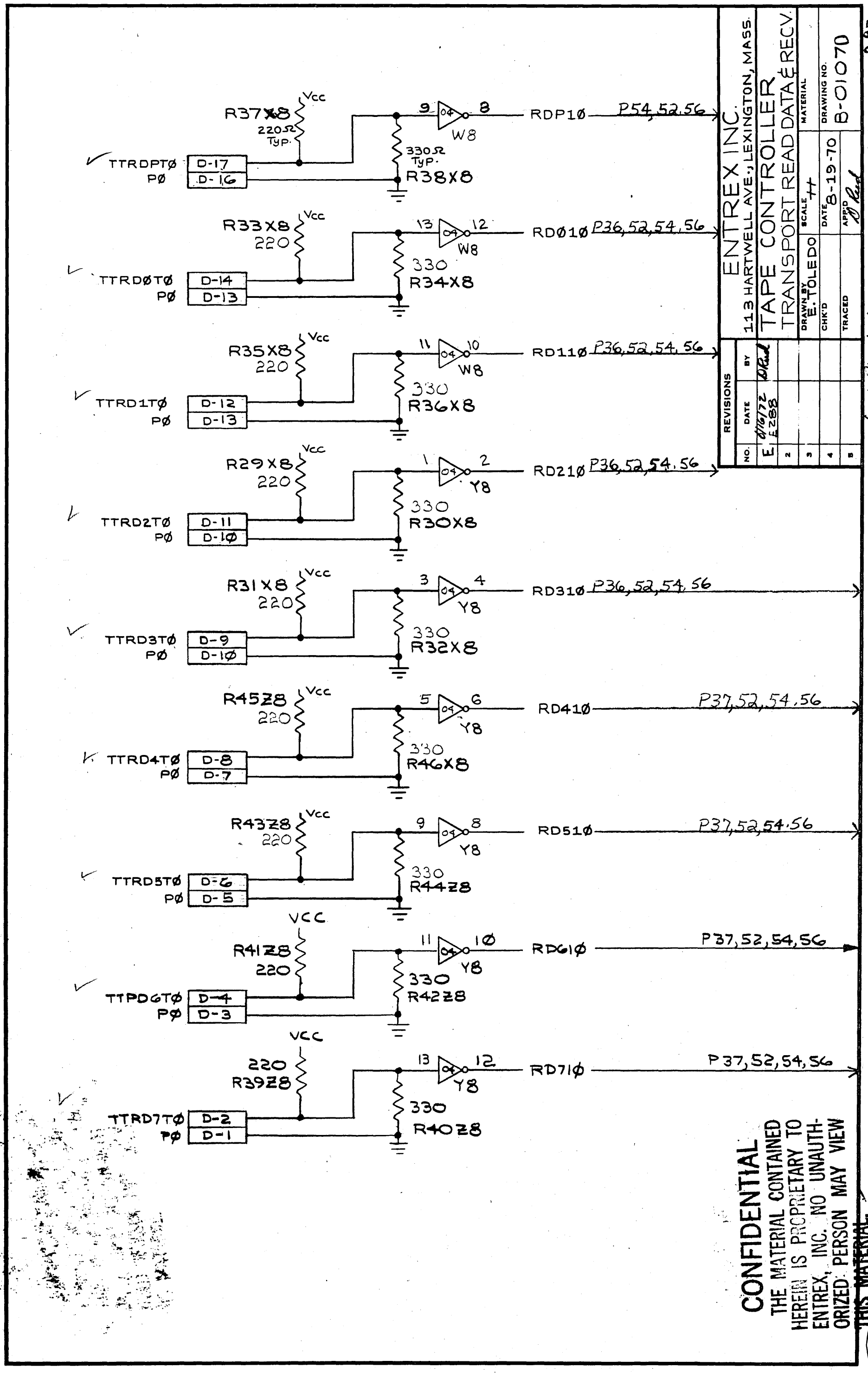

R37X8
Vcc
220Ω Typ.
TTRDPTØ
PØ
D-17
D-16
330Ω Typ.
R38X8
9
04
8
W8
RDP1Ø
P54,52,56
R33X8
220
TTRDØTØ
PØ
D-14
D-13
330
R34X8
13
12
RDØ1Ø
P36,52,54,56
R35X8
220
TTRD1TØ
PØ
D-12
D-13
330
R36X8
11
10
RD11Ø
P36,52,54,56
R29X8
220
TTRD2TØ
PØ
D-11
D-1Ø
330
R30X8
1
2
Y8
RD21Ø
P36,52,54,56
R31X8
220
TTRD3TØ
PØ
D-9
D-1Ø
330
R32X8
3
4
RD31Ø
P36,52,54,56
R45Z8
220
TTRD4TØ
PØ
D-8
D-7
330
R46X8
5
6
RD41Ø
P37,52,54,56
R43Z8
220
TTRD5TØ
PØ
D-6
D-5
330
R44Z8
9
8
RD51Ø
P37,52,54,56
VCC
R41Z8
220
TTPD6TØ
PØ
D-4
D-3
330
R42Z8
11
1Ø
RD61Ø
P37,52,54,56
VCC
220
R39Z8
TTRD7TØ
PØ
D-2
D-1
330
R40Z8
13
12
RD71Ø
P37,52,54,56
ENTREX INC.
113 HARTWELL AVE., LEXINGTON, MASS.
TAPE CONTROLLER
TRANSPORT READ DATA & RECV.
DRAWN BY E. TOLEDO
SCALE
DATE 8-19-70
APP'D
MATERIAL
DRAWING NO. B-01070
REVISIONS
NO.
DATE
BY
E
6/16/72
E288
2
3
4
5
P. 40
2.97
CONFIDENTIAL
THE MATERIAL CONTAINED HEREIN IS PROPRIETARY TO ENTREX, INC. NO UNAUTHORIZED PERSON MAY VIEW THIS MATERIAL.

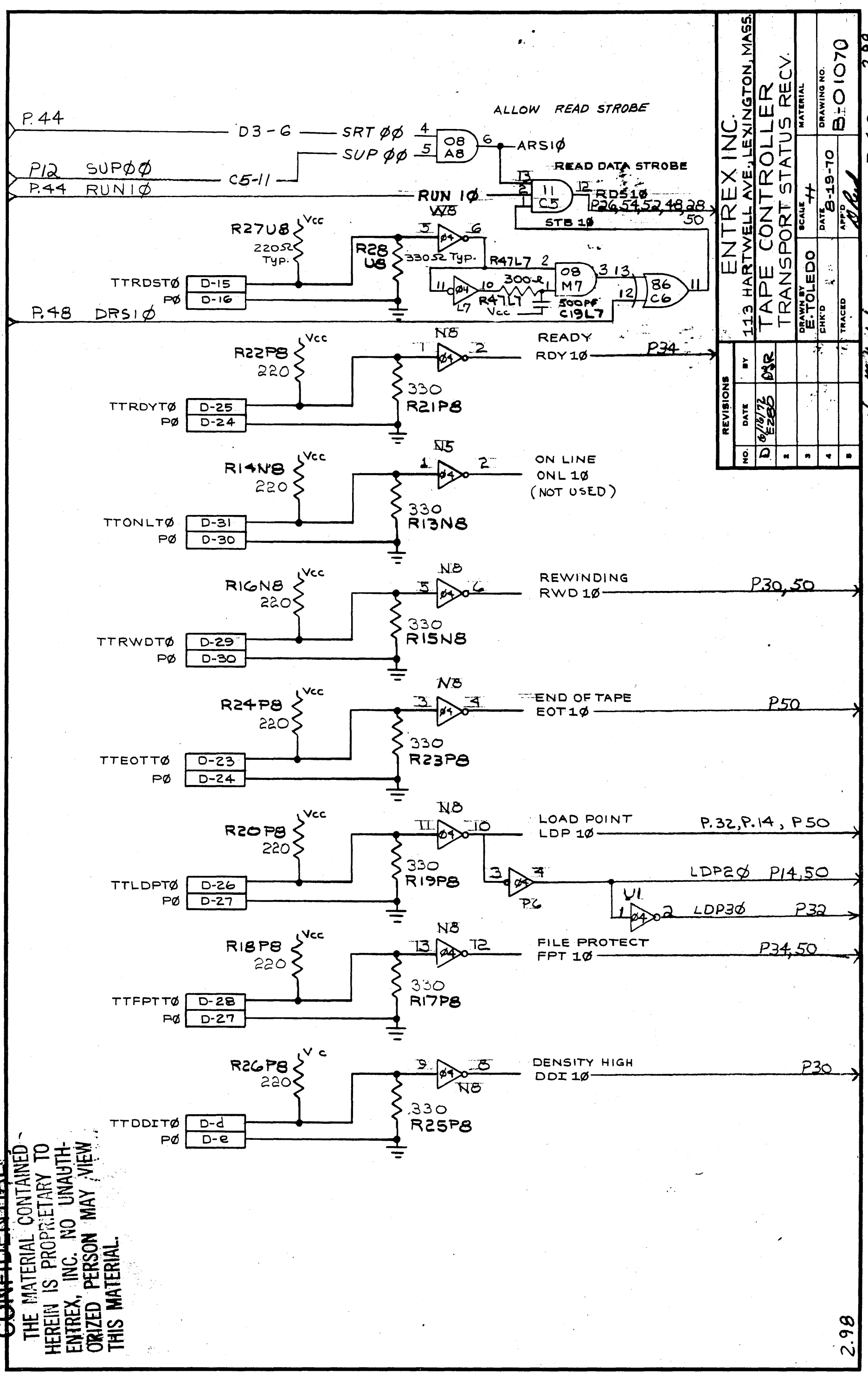

ENTREX INC.
113 HARTWELL AVE., LEXINGTON, MASS.

TAPE CONTROLLER
TRANSPORT STATUS RECV.

DRAWN BY E. TOLEDO
SCALE ++
DATE 8-19-70
MATERIAL
DRAWING NO. B-01070
CHK'D
APP'D
TRACED

REVISIONS

NO.	DATE	BY
D	6/16/72 E280	DSR
2		
3		
4		
5		

P.42 2.98

CONFIDENTIAL
THE MATERIAL CONTAINED HEREIN IS PROPRIETARY TO ENTREX, INC. NO UNAUTHORIZED PERSON MAY VIEW THIS MATERIAL.

2.98

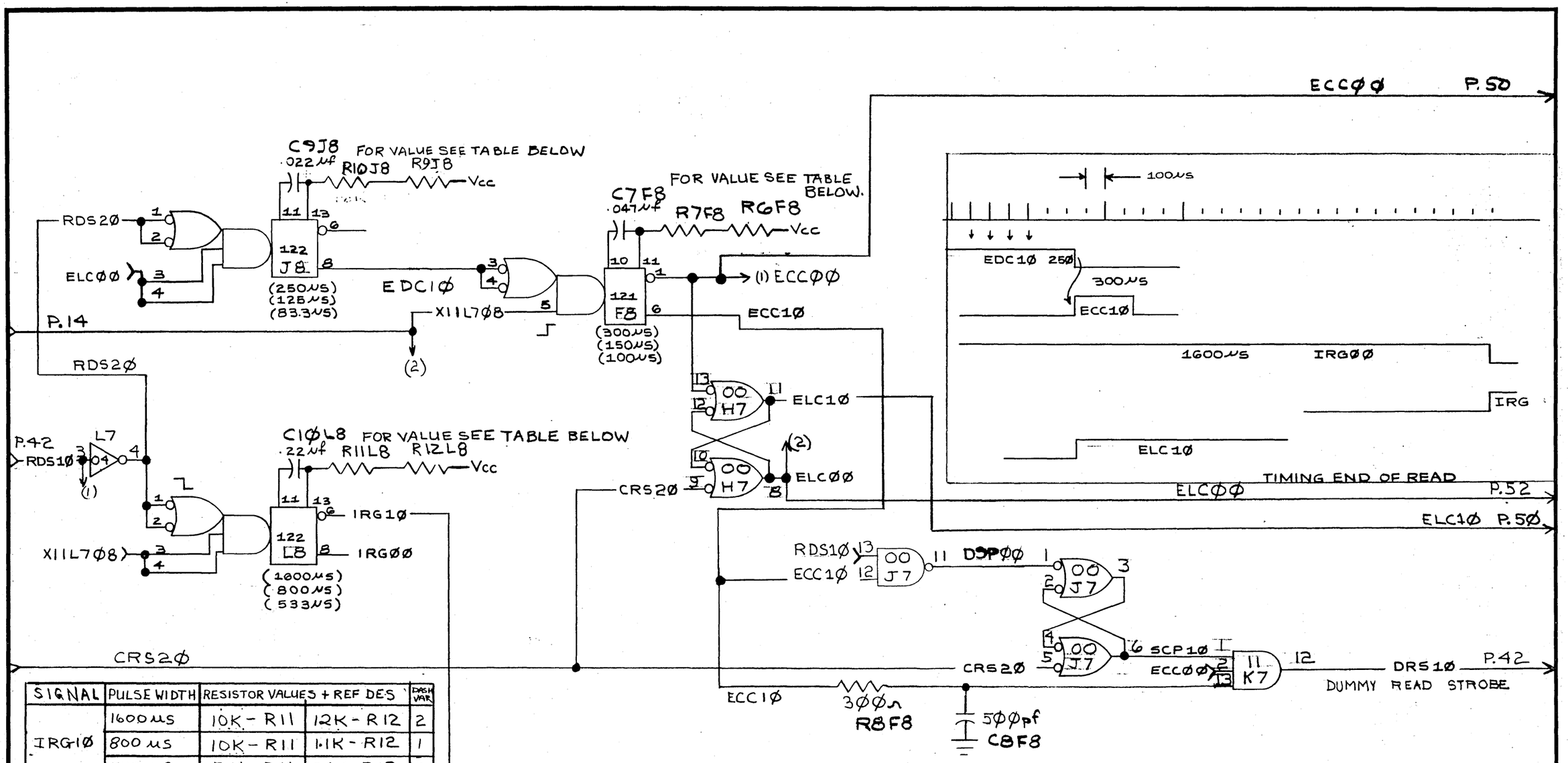

SIGNAL	PULSE WIDTH	RESISTOR VALUES + REF DES		DASH VAR
IRG1Ø	1600 µS	10K - R11	12K - R12	2
	800 µS	10K - R11	1.1K - R12	1
	533 µS	5.1K - R11	2.4K - R12	3
ECC1Ø	300 µS	8.2K - R7	62Ø - R6	2
	150 µS	3.9K - R7	51Ø - R6	1
	100 µS	24K - R7	47Ø - R6	3
EDC10	250 µS	33K - R10	3K - R9	2
	125 µS	16K - R10	2K - R9	1
	83.3 µS	10K - R10	2K R9	3

REVISIONS		
NO.	DATE	BY
G	ECO 363 7/6/72	DJR
H	ECO 446 8/22/72	DJR
I	ECO 763 1-18-73	[illegible]
4		
5		

ENTREX INC.
113 HARTWELL AVE., LEXINGTON, MASS.

TAPE CONTROLLER
GAP DETECTION LOGIC

DRAWN BY	SCALE	MATERIAL
E. TOLEDO	#	
CHK'D	DATE 8-25-70	DRAWING NO. B-01070
TRACED	APP'D D Read	

NATIONAL NO. 185 —11X17

Mtg [illegible] 2/18/72

P.48 2.101

CONFIDENTIAL
THE MATERIAL CONTAINED HEREIN IS PROPRIETARY TO ENTREX, INC. NO UNAUTHORIZED PERSON MAY VIEW THIS MATERIAL

ENTREX INC.
113 HARTWELL AVE., LEXINGTON, MASS.

TAPE CONTROLLER
ERROR CONTROL LOGIC

DRAWN BY	SCALE	MATERIAL	DRAWING NO.
E. TOLEDO	#		B-01070
CHK'D	DATE 8-21-70		
TRACED	APP'D		

REVISIONS			
NO.	DATE	BY	
1	ECO 556	D&R	
2			
3			
4			
5			

P. 50 2.102

P.56 CRP1Ø

P.56 CR Ø1Ø 1
P.56 11Ø 2
P.56 2ØØ 3
P.56 31Ø 4
P.56 4ØØ 5
P.56 51Ø 6
P.56 61Ø 11
P.56 71Ø 12

V5 3Ø 8
W5 04 6
5
CCB2Ø

J1 1Ø 12
1
2
13
CCE1Ø

CRC ERROR
9
10
H2 11 8
II
CER1Ø
P.32

P.16 RCI1Ø
P.18 DON1Ø

CER1Ø 9 E2 04 8
II
P.54 LER1Ø 13 MT 04 12
12
I
P.52 PERØØ
P.28 DALØØ 6
ILCØØ 3
ETMØØ 2
5
4
30 E3 8
ERR1Ø
P.30
P.42 LDP2Ø

P.22 RCS1B 1
P.42 RDS1Ø 2
13
10 F5 12
RCCØØ

P.48 ELC1Ø 1
P.48 ECCØØ 2
ØØ H7 3
ACC1Ø

P.46 WDS1Ø 4
P.14 ADT1Ø 5
ØØ N7 6
WCCØØ

2
ØØ N6 3
CCR1Ø 11
P6 04 10
CCRØØ
P.56
CCR1Ø P.56

P6
P.42 EOT1Ø 5 04 6
10
C 11
74 M5
D 12
XØØ
9
ETM1Ø
P.32
8
ETMØØ
13
(1)
RETØØ

LDP2Ø R1
P.42 RWD1Ø 9 04 8
5
4
11 F3 6
P.22 BSPØØ
CORØB 3

P.42 FPT1Ø 13
P.22 WCS1Ø 12
00 D4 11

P.42 LDP1Ø I
P.22 BSP1Ø 2
00 D4 3

1
40 F4 6
5
C4 9 04 8
10
ILLEGAL COMMAND

P.22 IL2ØØ
P.22 RRSØØ
CPSRT 30 11
C
74 D3
D
9
ILC1Ø
P.3Ø
12
8
ILCØØ
P.26
13
(1)

P.18 CUSEB1Ø
CUSEB1Ø
P.18 (1)
CORØB

2.102
NO. 185—11X17

CONFIDENTIAL
THE MATERIAL CONTAINED HEREIN IS PROPRIETARY TO ENTREX, INC. NO UNAUTHORIZED PERSON MAY VIEW THIS MATERIAL.

ENTREX INC.
113 HARTWELL AVE., LEXINGTON, MASS.

TAPE CONTROLLER
PARITY CHECK & GENERATE LOGIC

DRAWN BY	SCALE	MATERIAL
E. TOLEDO	#	
CHK'D	DATE 8-20-70	DRAWING NO. B-01070
TRACED	APP'D	

REVISIONS NO.	DATE	BY
1		
2		
3		
4		
5		

2.103
P.52

N5 04 13 12
P.40 RDP1Ø
180 P5 EVN ODD
P.40 RDØ1Ø 8
P.40 11Ø 9
P.40 21Ø 10
P.40 31Ø 11
P.40 41Ø 12
P.40 51Ø 13
P.40 61Ø 1
P.40 71Ø 2
READ PARITY ODD
RPO1Ø
RPE1Ø
C6 86
RPO1Ø
PEV1Ø
74 M5
PER1Ø
PER ØØ
P.3Ø
P.50
P.42 RDS1Ø
P.22 BSPØØ
ELCØØ
P.48
40 B5
CRSØØ
P.18 CRSØØ
(4)
P.22 PEV1Ø
P6 04
P.38 WDØ1Ø
P.38 WD11Ø
P.38 WD21Ø
P.38 WD31Ø
P.38 WD41Ø
P.38 WD51Ø
P.38 WD61Ø
P.38 WD71Ø
R7 180
WPG1Ø
WPGØØØ
PC 04
SCR1Ø
P.46 SCR1Ø
P.56 CRPØØ
ØØ NC
WDP1Ø
P.56
38 V8
D-E
D-F
TTWDPTØ
PØ

NO. 188—11317

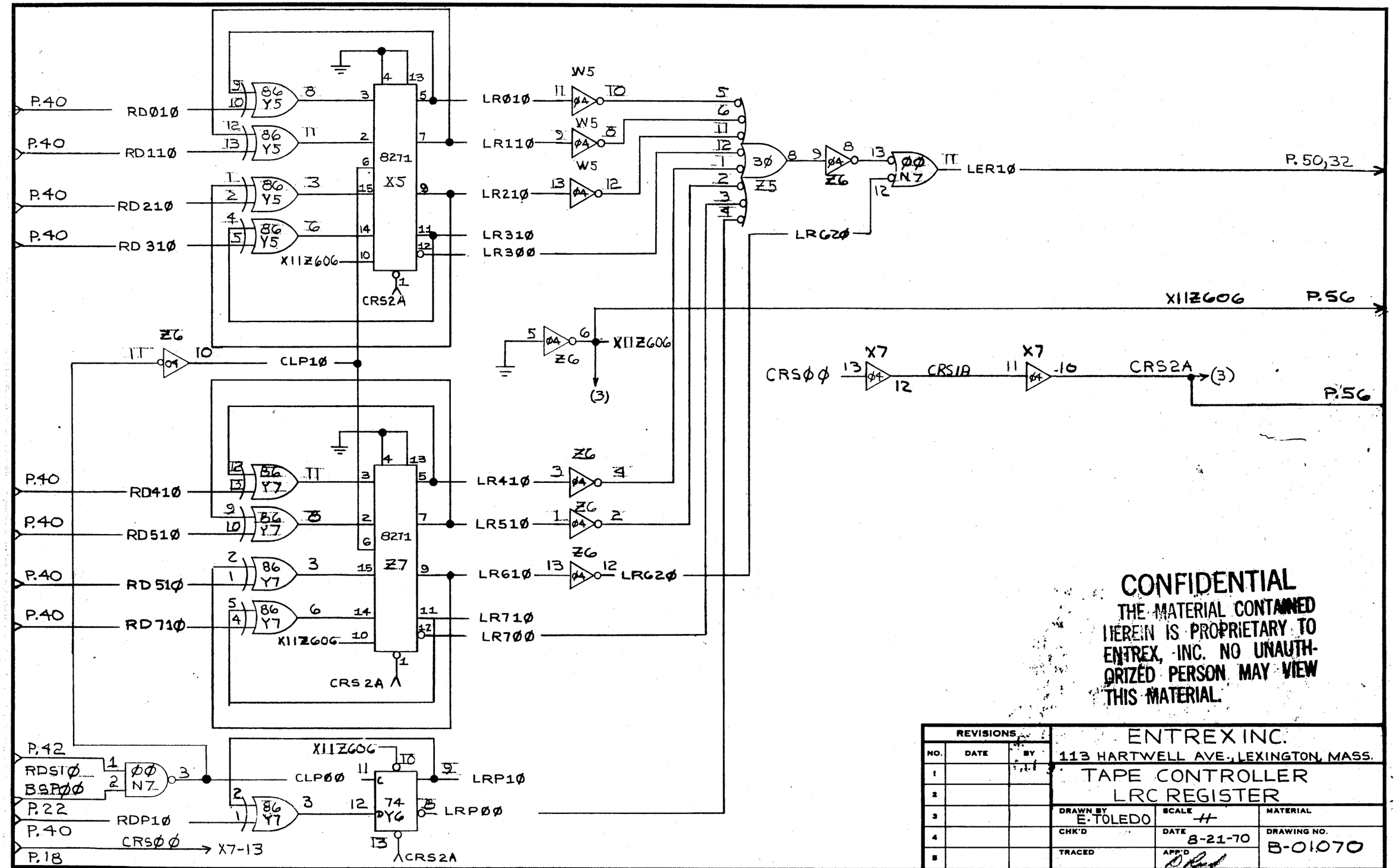

CONFIDENTIAL
THE MATERIAL CONTAINED HEREIN IS PROPRIETARY TO ENTREX, INC. NO UNAUTHORIZED PERSON MAY VIEW THIS MATERIAL.

REVISIONS		
NO.	DATE	BY
1		
2		
3		
4		
5		

ENTREX INC.
113 HARTWELL AVE., LEXINGTON, MASS.

TAPE CONTROLLER
LRC REGISTER

DRAWN BY	SCALE	MATERIAL
E. TOLEDO	#	
CHK'D	DATE 8-21-70	DRAWING NO. B-01070
TRACED	APP'D	

NO. 185 —11X17 2.104

Mfg [signature] 2/18/70 P.54 2.104

CONFIDENTIAL
THE MATERIAL CONTAINED HEREIN IS PROPRIETARY TO ENTREX, INC. NO UNAUTHORIZED PERSON MAY VIEW THIS MATERIAL.

ENTREX INC.
113 HARTWELL AVE., LEXINGTON, MASS.

TAPE CONTROLLER
CRC REGISTER

DRAWN BY	SCALE	MATERIAL
E. TOLEDO	##	
CHK'D	DATE	DRAWING NO.
	8-21-70	B-01070
TRACED	APP'D	

REVISIONS			
NO.	DATE	BY	
1			
2			
3			
4			
5			

2.105

P.50

WCSØØ P.22

X7

RD61Ø P.40
WD61Ø
RD71Ø P.40
WD71Ø
RDP1Ø P.40
WDP1Ø P.52
RDØ1Ø P.40
WDØ1Ø
RD11Ø P.40
WD11Ø
RD21Ø P.40
WD21Ø
RD31Ø P.40
WD31Ø
RD41Ø P.40
WD41Ø
RD51Ø P.40
WD51Ø

51 V7, 51 U7, 51 T7, 51 W7

CR6ØØ, CR7ØØ, CRPØØ, CRØØØ, CR1ØØ, CR2ØØ, CR3ØØ, CR4ØØ, CR5ØØ

86 V6, 86 T6, 86 T5, 86 X6

CCR1Ø
X117606
CCRØØ

8271 U6, 8271 W6, 74 DY6

CRS2A

U5

CR71Ø P.50
CR7ØØ P.38
CRP1Ø P.50
CRPØØ
CR01Ø P.38
CRØØØ
CR11Ø P.50
CR1ØØ P.38
(1)

CR21Ø P.50,38
CR2ØØ
CR31Ø P.50
CR3ØØ P.38
CR41Ø P.38
CR4ØØ P.50
CR61Ø P.50
CR6ØØ P.38

X11Z6ØG

CR51Ø P.50
CR5ØØ P.38

P.5Ø CCRØØ
P.50 CCR1Ø → (2)
P.54 CRS2A → (3)
X11Z6ØG → P.54

P.56

NO. 185—11X17

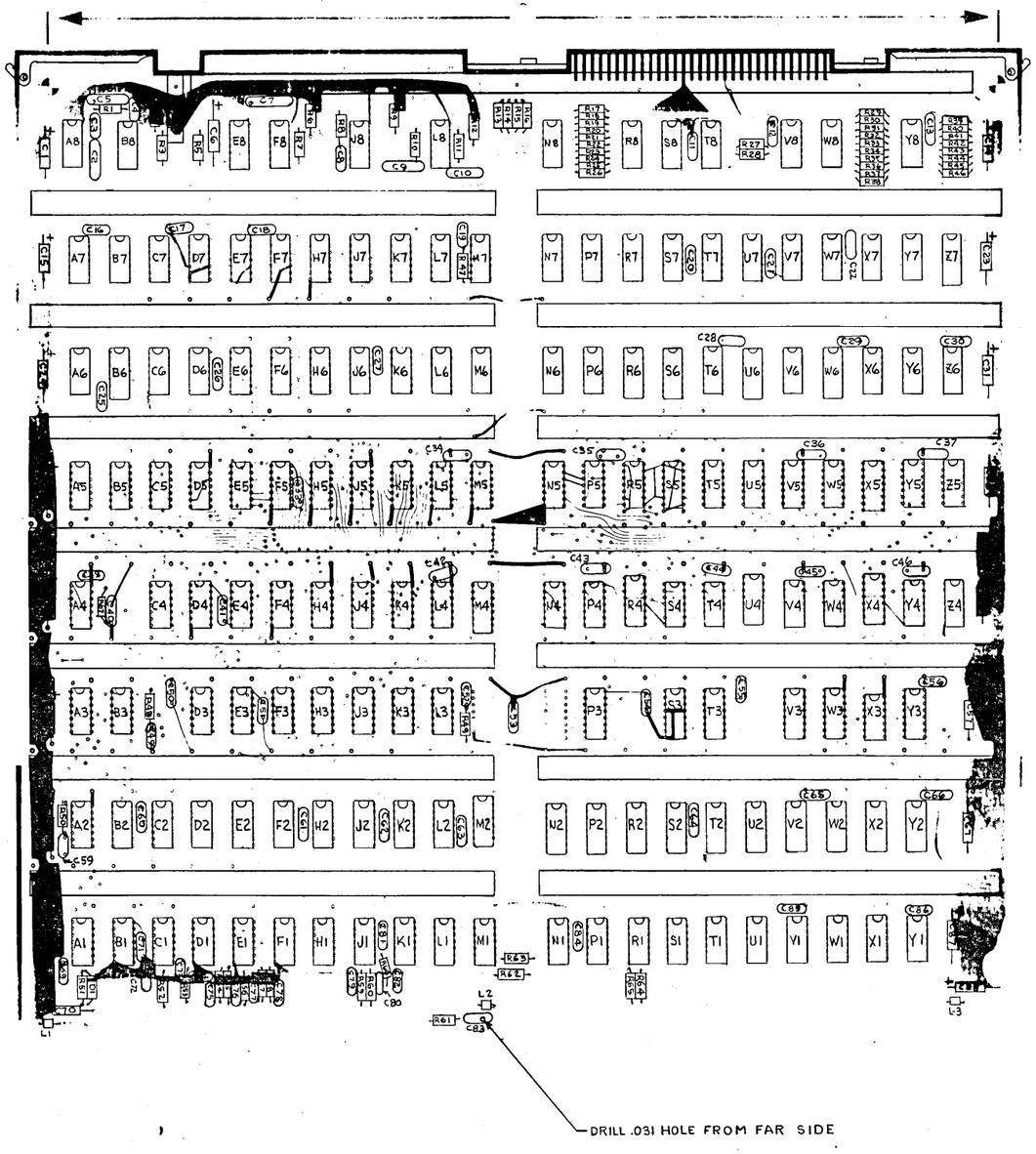

NOTES:
1. PARTS LIST BP 62-45-01070-XXX
2. SCHEMATIC B 01070
3. PC BOARD ETCH REV J

DASH VARIATION	
25 IPS	001
12.5 IPS	002
37.5 IPS	003

REV	DESCRIPTION	APPD	DATE
L	ECO # 825 REDRAWN		5/24/73

NEXT ASSY	USED ON

UNLESS OTHERWISE SPECIFIED
FRACT DECIMAL DEGREE
± ± ±
MAX RADIUS
RES ARE IN OHMS
± % WATT
DIODES ARE
CAPS ARE uf v
TSTR ARE
INT CKTS ARE SERIES

MATERIAL

FINISH PER SPEC A00527 UNLESS OTHERWISE SPECIFIED

	DRAWN	BY	DATE
	CHECK		
	APPRV		
	ENG		
	PROMGR		

ENTREX INC.
168 MIDDLESEX TURNPIKE
BURLINGTON MASS 01803

ASSEMBLY DWG.
9 CHANNEL TAPE CONTROLLER

SCALE	SIZE	CAT	SUB CAT	DRAWING NUMBER	DASH #	REV
FULL	PA	62	45	01070	XXX	L

DO NOT SCALE PRINT — SHEET 1 OF 2

2.106

2.106