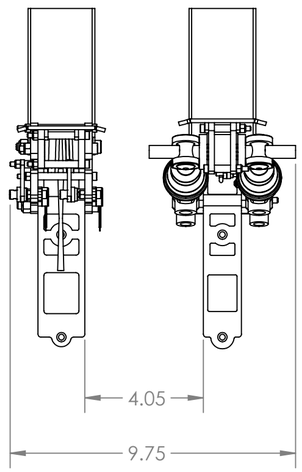

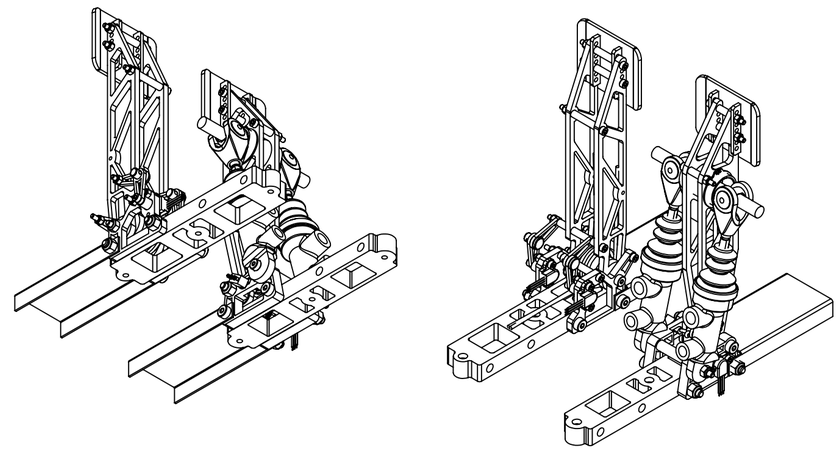

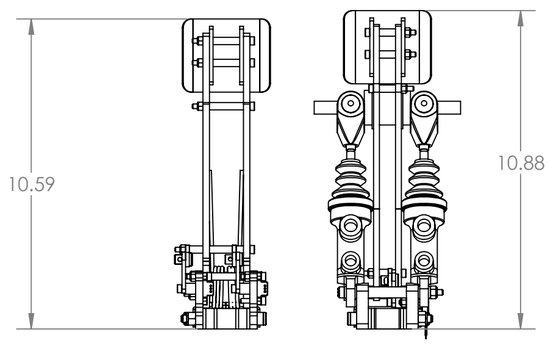

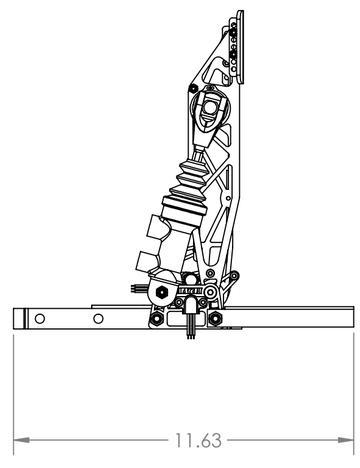

NOTES (UNLESS OTHERWISE SPECIFIED):

---

1. ALL NON-DIMENSIONED PART FEATURES ARE TO BE TAKEN FROM THE SOLID MODEL.
2. 0.01 in MAX CHAMFER
3. INTERNAL AND EXTERNAL RADII 0.01 in MAX.
4. PARTS TO BE BURR FREE

PROPRIETARY AND CONFIDENTIAL

THE INFORMATION CONTAINED IN THIS DRAWING IS THE SOLE PROPERTY OF FORMULA RACING AT UC DAVIS. ANY REPRODUCTION IN PART OR AS A WHOLE WITHOUT THE WRITTEN PERMISSION OF FORMULA RACING AT UC DAVIS IS PROHIBITED.

		UNLESS OTHERWISE SPECIFIED:		NAME	DATE
		DIMENSIONS ARE IN INCHES TOLERANCES (UNLESS OTHERWISE SPECIFIED): FRACTIONAL ± 1/32 ANGULAR: MACH ± 1° BEND ±3° TWO PLACE DECIMAL ±0.01 THREE PLACE DECIMAL ±0.005	DRAWN		
			CHECKED		
			ENG APPR.		
			MFG APPR.		
		INTERPRET GEOMETRIC TOLERANCING PER: ASME Y14.5	Q.A.		
		MATERIAL ASSEMBLY	COMMENTS:		
NEXT ASSY	USED ON	FINISH ASSEMBLY			
APPLICATION		DO NOT SCALE DRAWING			

FORMULA RACING
AT UC DAVIS

TITLE:

Pedal Box

SIZE	DWG. NO.	REV
C	BR-A10001-AD-Pedal Box Assembly	
SCALE: 1:4	WEIGHT: 4.99	SHEET 1 OF 1

SOLIDWORKS Educational Product. For Instructional Use Only.