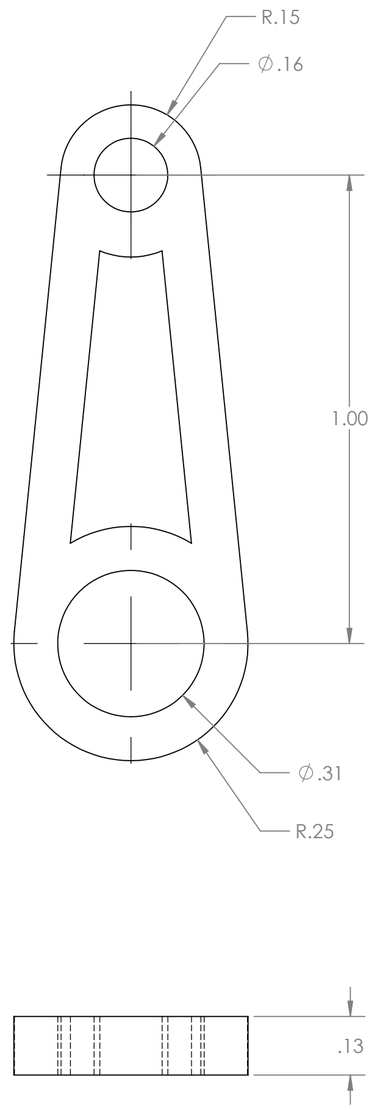

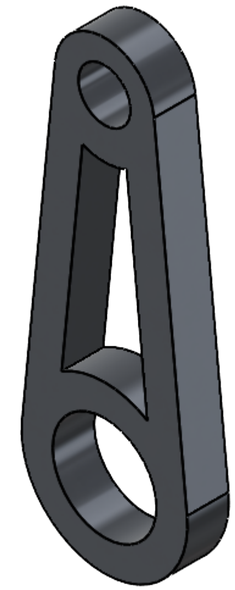

NOTES (UNLESS OTHERWISE SPECIFIED):

---

1. ALL NON-DIMENSIONED PART FEATURES ARE TO BE TAKEN FROM THE SOLID MODEL.
2. 0.01 in MAX CHAMFER
3. INTERNAL AND EXTERNAL RADII 0.01 in MAX.
4. PARTS TO BE BURR FREE

PROPRIETARY AND CONFIDENTIAL

THE INFORMATION CONTAINED IN THIS DRAWING IS THE SOLE PROPERTY OF FORMULA RACING AT UC DAVIS. ANY REPRODUCTION IN PART OR AS A WHOLE WITHOUT THE WRITTEN PERMISSION OF FORMULA RACING AT UC DAVIS IS PROHIBITED.

NEXT ASSY	USED ON	UNLESS OTHERWISE SPECIFIED: DIMENSIONS ARE IN INCHES TOLERANCES (UNLESS OTHERWISE SPECIFIED): FRACTIONAL ± 1/32 ANGULAR: MACH ± 1° BEND ±3° TWO PLACE DECIMAL ±0.01 THREE PLACE DECIMAL ±0.005		NAME	DATE
			DRAWN		
			CHECKED		
			ENG APPR.		
			MFG APPR.		
		INTERPRET GEOMETRIC TOLERANCING PER: ASME Y14.5	Q.A.		
		MATERIAL 6061-T6 (SS)	COMMENTS: See Notes Section		
		FINISH			
APPLICATION		DO NOT SCALE DRAWING			

FORMULA RACING AT UC DAVIS

TITLE: Vertical Linkage

SIZE	DWG. NO.	REV
C	BR-0000X-AC-APPS Linkage Vert Arm	

SCALE: 4:1 | WEIGHT: 0.00 | SHEET 1 OF 1

SOLIDWORKS Educational Product. For Instructional Use Only.