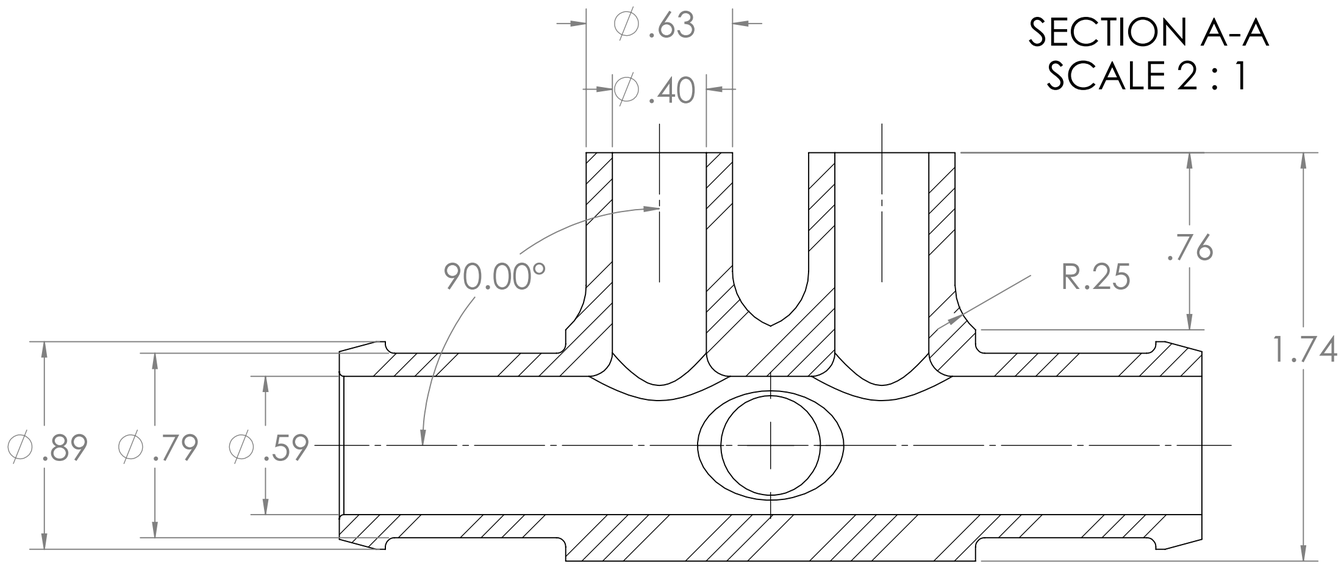

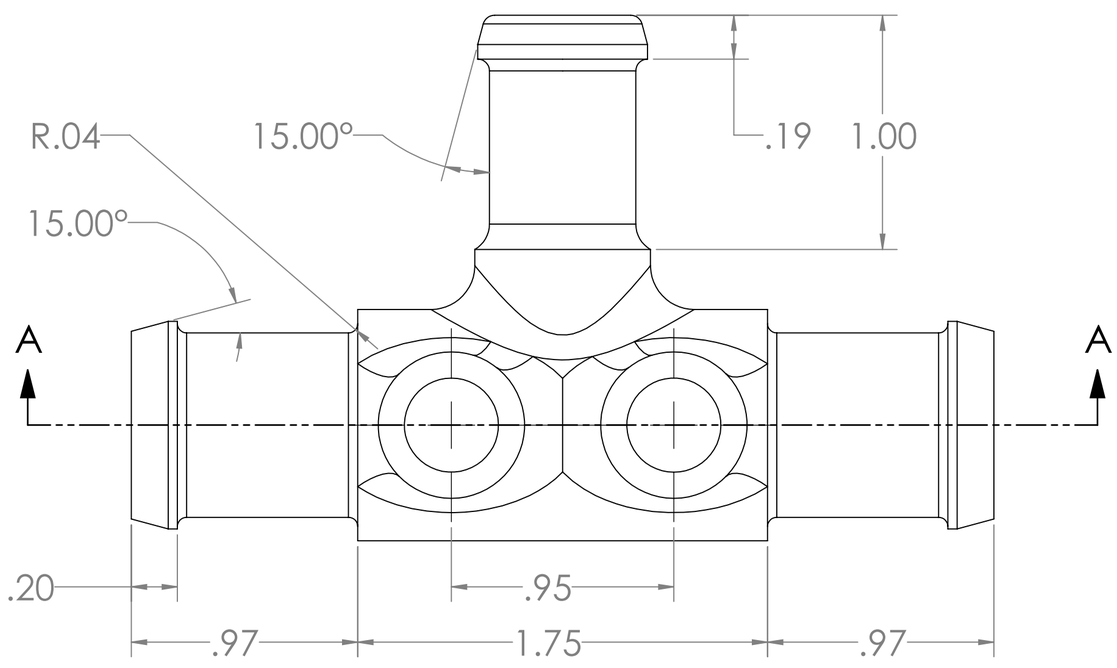

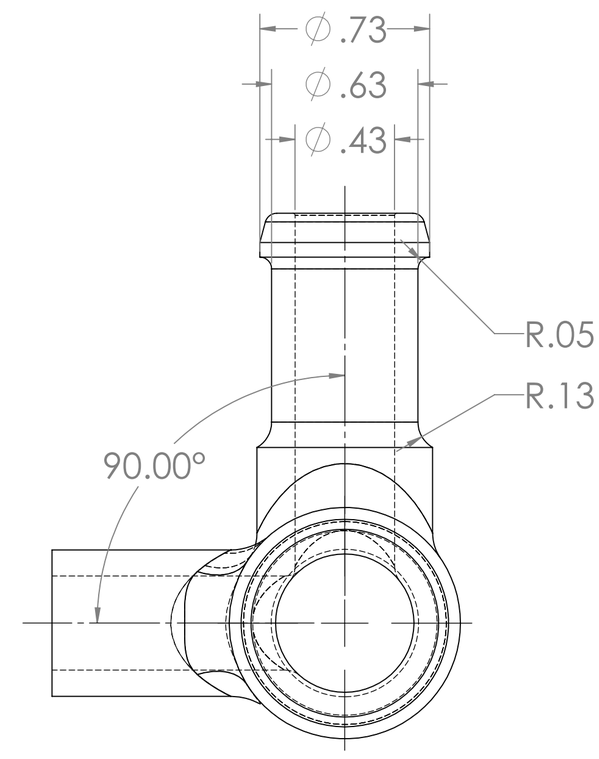

NOTES (UNLESS OTHERWISE SPECIFIED):

1. ALL NON-DIMENSIONED PART FEATURES ARE TO BE TAKEN FROM THE SOLID MODEL.
2. 0.01 in MAX CHAMFER
3. INTERNAL AND EXTERNAL RADII 0.01 in MAX.
4. PARTS TO BE BURR FREE

PROPRIETARY AND CONFIDENTIAL

THE INFORMATION CONTAINED IN THIS DRAWING IS THE SOLE PROPERTY OF FORMULA RACING AT UC DAVIS. ANY REPRODUCTION IN PART OR AS A WHOLE WITHOUT THE WRITTEN PERMISSION OF FORMULA RACING AT UC DAVIS IS PROHIBITED.

NEXT ASSY	USED ON
APPLICATION	

UNLESS OTHERWISE SPECIFIED:
DIMENSIONS ARE IN INCHES
TOLERANCES
(UNLESS OTHERWISE SPECIFIED):
FRACTIONAL ± 1/32
ANGULAR: MACH ± 1° BEND ± 3°
TWO PLACE DECIMAL ±0.01
THREE PLACE DECIMAL ±0.005

INTERPRET GEOMETRIC TOLERANCING PER: ASME Y14.5

MATERIAL
High Temperature Resin

FINISH

DO NOT SCALE DRAWING

	NAME	DATE
DRAWN	CTANG	3/21/2023
CHECKED		
ENG APPR.		
MFG APPR.		
Q.A.		

COMMENTS:

FORMULA RACING
AT UC DAVIS

TITLE:
LH 5 Way Tee Adaptor, 2 sensor coolant inlet

SIZE C | DWG. NO. EN-50102-AC-LH 5 Way Tee Adaptor, 2 sensor coolant inlet | REV A

SCALE: 2:1 | WEIGHT: | SHEET 1 OF 1

SOLIDWORKS Educational Product. For Instructional Use Only.