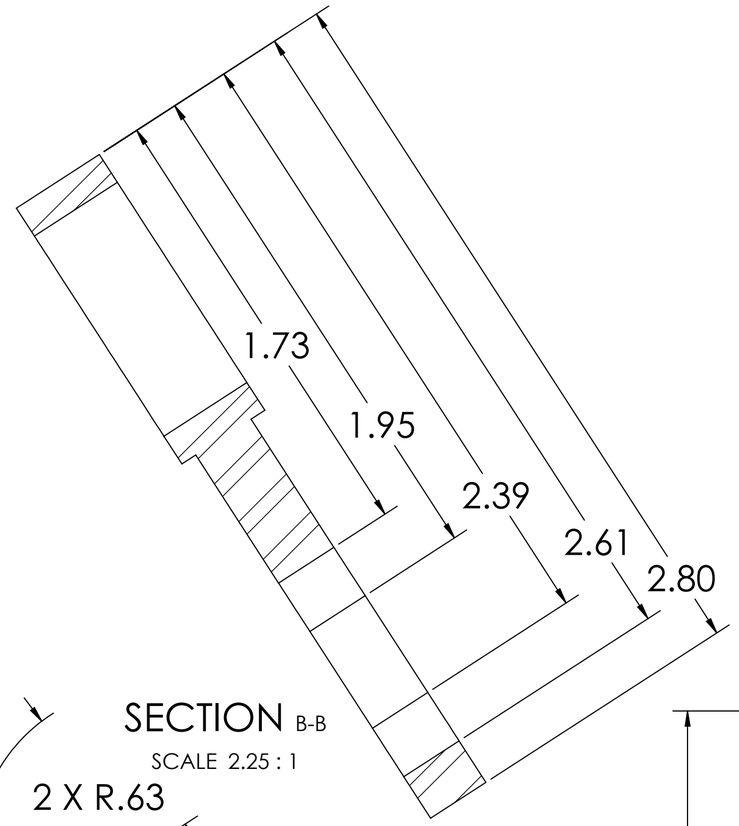

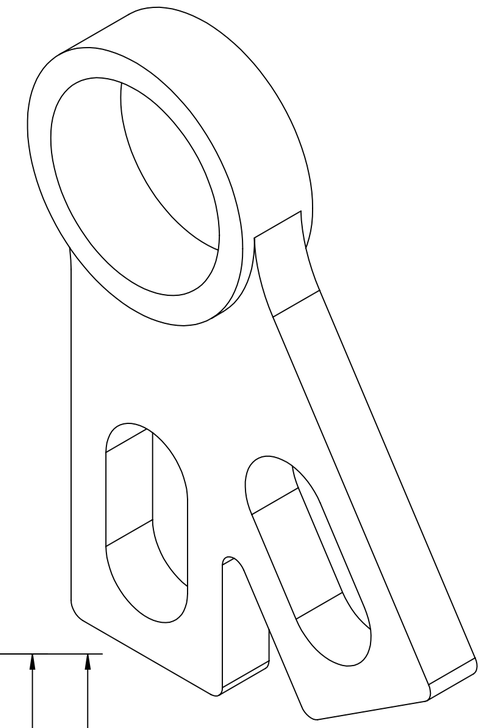

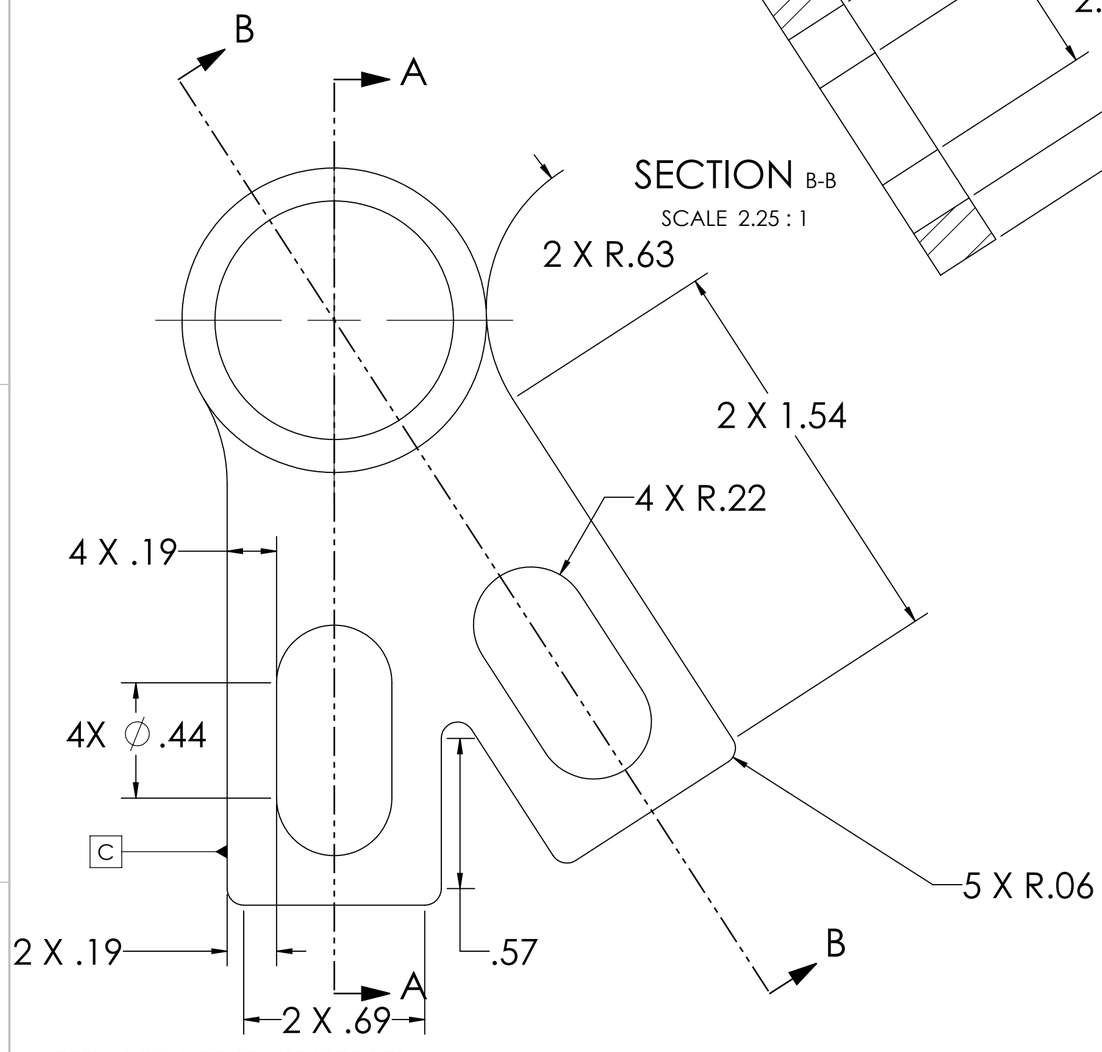

SECTION B-B
SCALE 2.25 : 1

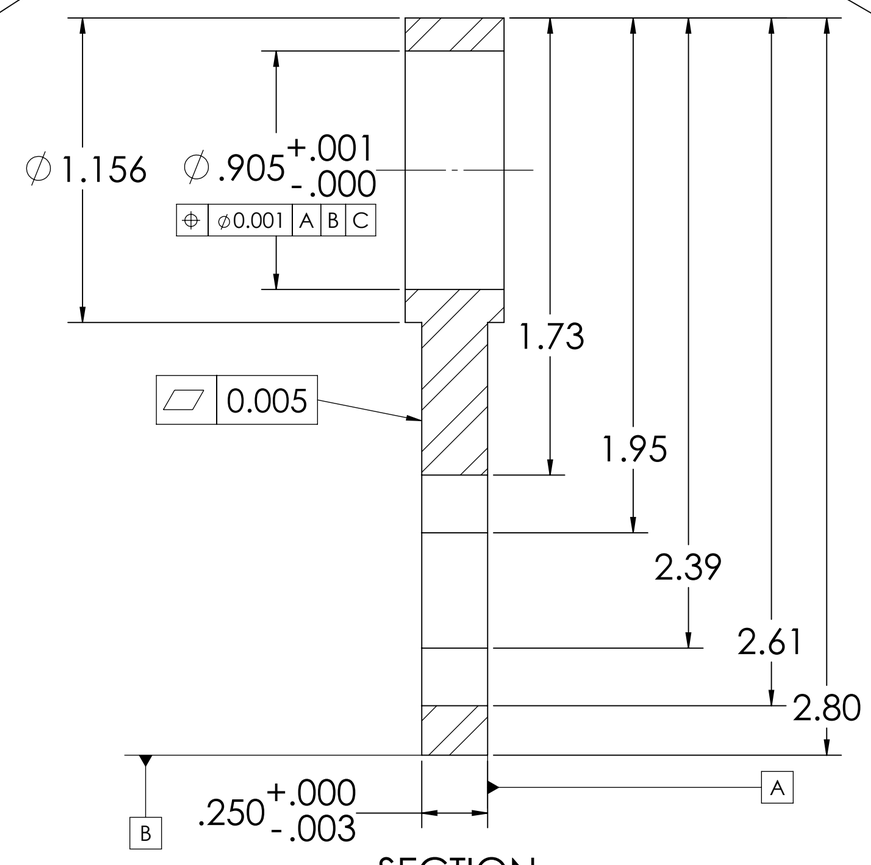

SECTION A-A
SCALE 2.25 : 1

NOTES (UNLESS OTHERWISE SPECIFIED):

1. ALL NON-DIMENSIONED PART FEATURES ARE TO BE TAKEN FROM THE SOLID MODEL.
2. 0.01 in MAX CHAMFER
3. INTERNAL AND EXTERNAL RADII 0.01 in MAX.
4. PARTS TO BE BURR FREE

PROPRIETARY AND CONFIDENTIAL

THE INFORMATION CONTAINED IN THIS DRAWING IS THE SOLE PROPERTY OF FORMULA RACING AT UC DAVIS. ANY REPRODUCTION IN PART OR AS A WHOLE WITHOUT THE WRITTEN PERMISSION OF FORMULA RACING AT UC DAVIS IS PROHIBITED.

NEXT ASSY	USED ON
APPLICATION	

UNLESS OTHERWISE SPECIFIED:
DIMENSIONS ARE IN INCHES
TOLERANCES
(UNLESS OTHERWISE SPECIFIED):
FRACTIONAL ± 1/32
ANGULAR: MACH ±1° BEND ±3°
TWO PLACE DECIMAL ±0.01
THREE PLACE DECIMAL ±0.005
INTERPRET GEOMETRIC TOLERANCING PER: ASME Y14.5
MATERIAL AISI 4130 Steel, annealed at 865C
FINISH
DO NOT SCALE DRAWING

	NAME	DATE
DRAWN	Anthony Castellanos	02/16/2024
CHECKED		
ENG APPR.		
MFG APPR.		
Q.A.		

COMMENTS:

FORMULA RACING AT UC DAVIS

TITLE:

Lower Apex F

SIZE C | DWG. NO. SP-10002-AE-Lower Apex F | REV

SCALE: 2:1 | WEIGHT: | SHEET 1 OF 1

SOLIDWORKS Educational Product. For Instructional Use Only.