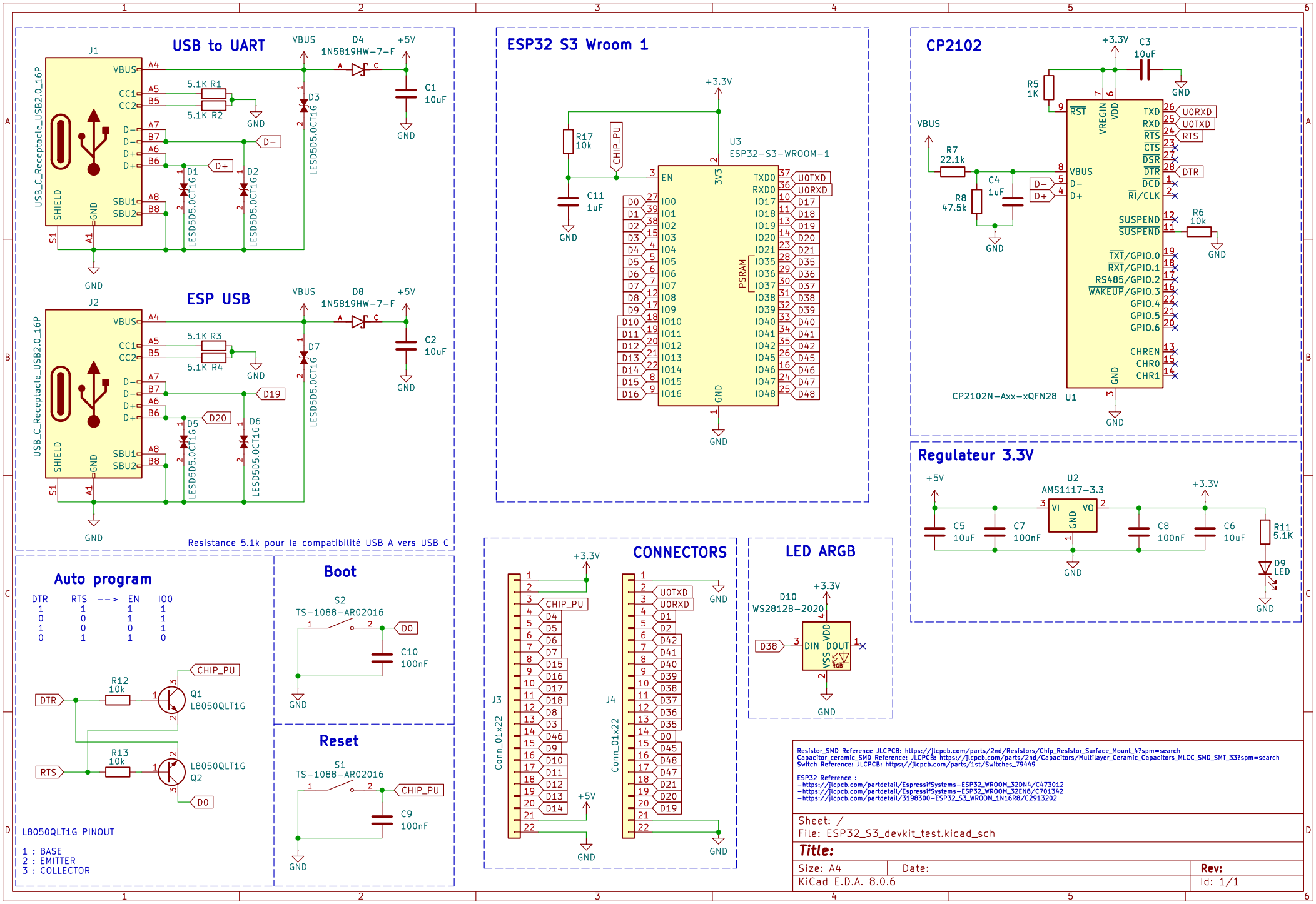
USB to UART
J1
USB_C_Receptacle_USB2.0_16P
VBUS
CC1
CC2
D-
D+
SBU1
SBU2
SHIELD
GND
S1
A1
5.1K R1
5.1K R2
D1
D2
D3
D4
1N5819HW-7-F
+5V
C1
10uF
LESD5D5.0CT1G
ESP USB
J2
5.1K R3
5.1K R4
D5
D6
D7
D8
C2
10uF
D19
D20
Resistance 5.1k pour la compatibilité USB A vers USB C
ESP32 S3 Wroom 1
+3.3V
R17
10k
CHIP_PU
C11
1uF
U3
ESP32-S3-WROOM-1
EN
3V3
IO0
IO1
IO2
IO3
IO4
IO5
IO6
IO7
IO8
IO9
IO10
IO11
IO12
IO13
IO14
IO15
IO16
TXD0
RXD0
IO17
IO18
IO19
IO20
IO21
IO35
IO36
IO37
IO38
IO39
IO40
IO41
IO42
IO45
IO46
IO47
IO48
PSRAM
U0TXD
U0RXD
CP2102
R5
1K
C3
10uF
VBUS
R7
22.1k
R8
47.5k
C4
1uF
RST
VREGIN
VDD
TXD
RXD
RTS
CTS
DSR
DTR
DCD
RI/CLK
SUSPEND
TXT/GPIO.0
RXT/GPIO.1
RS485/GPIO.2
WAKEUP/GPIO.3
GPIO.4
GPIO.5
GPIO.6
CHREN
CHR0
CHR1
R6
10k
CP2102N-Axx-xQFN28
U1
Regulateur 3.3V
U2
AMS1117-3.3
VI
VO
C5
10uF
C7
100nF
C8
100nF
C6
10uF
R11
5.1K
D9
LED
Auto program
DTR RTS --> EN IO0
1 1 1 1
0 0 1 1
1 0 0 1
0 1 1 0
R12
10k
R13
10k
Q1
L8050QLT1G
Q2
L8050QLT1G
L8050QLT1G PINOUT
1 : BASE
2 : EMITTER
3 : COLLECTOR
Boot
S2
TS-1088-AR02016
C10
100nF
Reset
S1
TS-1088-AR02016
C9
100nF
CONNECTORS
J3
Conn_01x22
J4
Conn_01x22
LED ARGB
D10
WS2812B-2020
D38
DIN
DOUT
VDD
VSS
Resistor_SMD Reference JLCPCB: https://jlcpcb.com/parts/2nd/Resistors/Chip_Resistor_Surface_Mount_4?spm=search
Capacitor_ceramic_SMD Reference: JLCPCB: https://jlcpcb.com/parts/2nd/Capacitors/Multilayer_Ceramic_Capacitors_MLCC_SMD_SMT_33?spm=search
Switch Reference: JLCPCB: https://jlcpcb.com/parts/1st/Switches_79449
ESP32 Reference :
-https://jlcpcb.com/partdetail/EspressifSystems-ESP32_WROOM_32DN4/C473012
-https://jlcpcb.com/partdetail/EspressifSystems-ESP32_WROOM_32EN8/C701342
-https://jlcpcb.com/partdetail/3198300-ESP32_S3_WROOM_1N16R8/C2913202
Sheet: /
File: ESP32_S3_devkit_test.kicad_sch
Title:
Size: A4
Date:
Rev:
KiCad E.D.A. 8.0.6
Id: 1/1