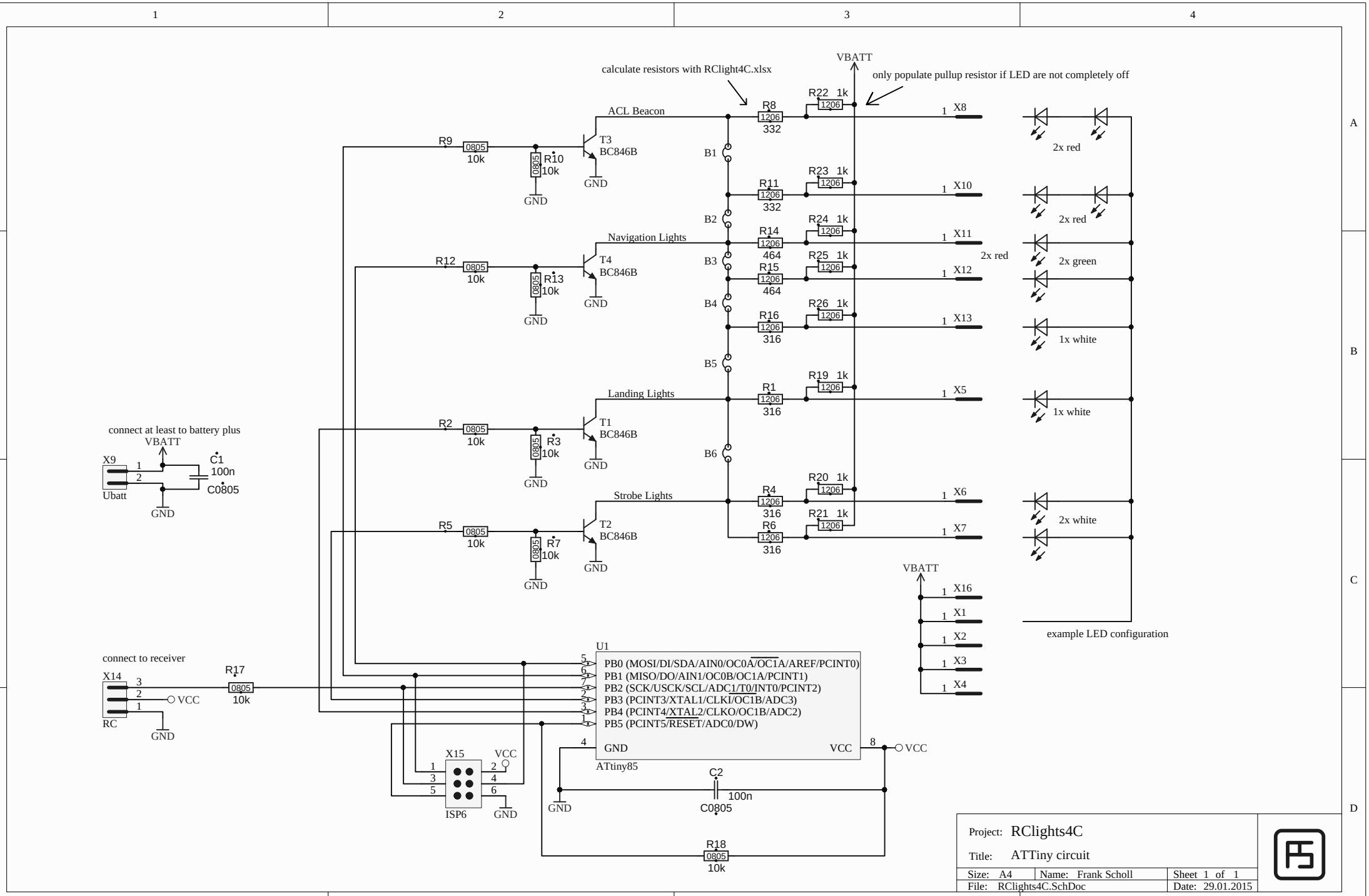
calculate resistors with RClight4C.xlsx
VBATT
only populate pullup resistor if LED are not completely off
ACL Beacon
Navigation Lights
Landing Lights
Strobe Lights
T3 BC846B
T4 BC846B
T1 BC846B
T2 BC846B
R9 0805 10k
R10 0805 10k
R12 0805 10k
R13 0805 10k
R2 0805 10k
R3 0805 10k
R5 0805 10k
R7 0805 10k
R8 1206 332
R11 1206 332
R14 1206 464
R15 1206 464
R16 1206 316
R1 1206 316
R4 1206 316
R6 1206 316
R22 1k 1206
R23 1k 1206
R24 1k 1206
R25 1k 1206
R26 1k 1206
R19 1k 1206
R20 1k 1206
R21 1k 1206
B1
B2
B3
B4
B5
B6
X8
X10
X11
X12
X13
X5
X6
X7
X16
X1
X2
X3
X4
2x red
2x red
2x red
2x green
1x white
1x white
2x white
example LED configuration
connect at least to battery plus
X9
Ubatt
C1 100n C0805
GND
connect to receiver
X14
RC
R17 0805 10k
VCC
U1
PB0 (MOSI/DI/SDA/AIN0/OC0A/OC1A/AREF/PCINT0)
PB1 (MISO/DO/AIN1/OC0B/OC1A/PCINT1)
PB2 (SCK/USCK/SCL/ADC1/T0/INT0/PCINT2)
PB3 (PCINT3/XTAL1/CLKI/OC1B/ADC3)
PB4 (PCINT4/XTAL2/CLKO/OC1B/ADC2)
PB5 (PCINT5/RESET/ADC0/DW)
GND
VCC
ATtiny85
X15
ISP6
C2 100n C0805
R18 0805 10k
Project: RClights4C
Title: ATTiny circuit
Size: A4
Name: Frank Scholl
Sheet 1 of 1
File: RClights4C.SchDoc
Date: 29.01.2015