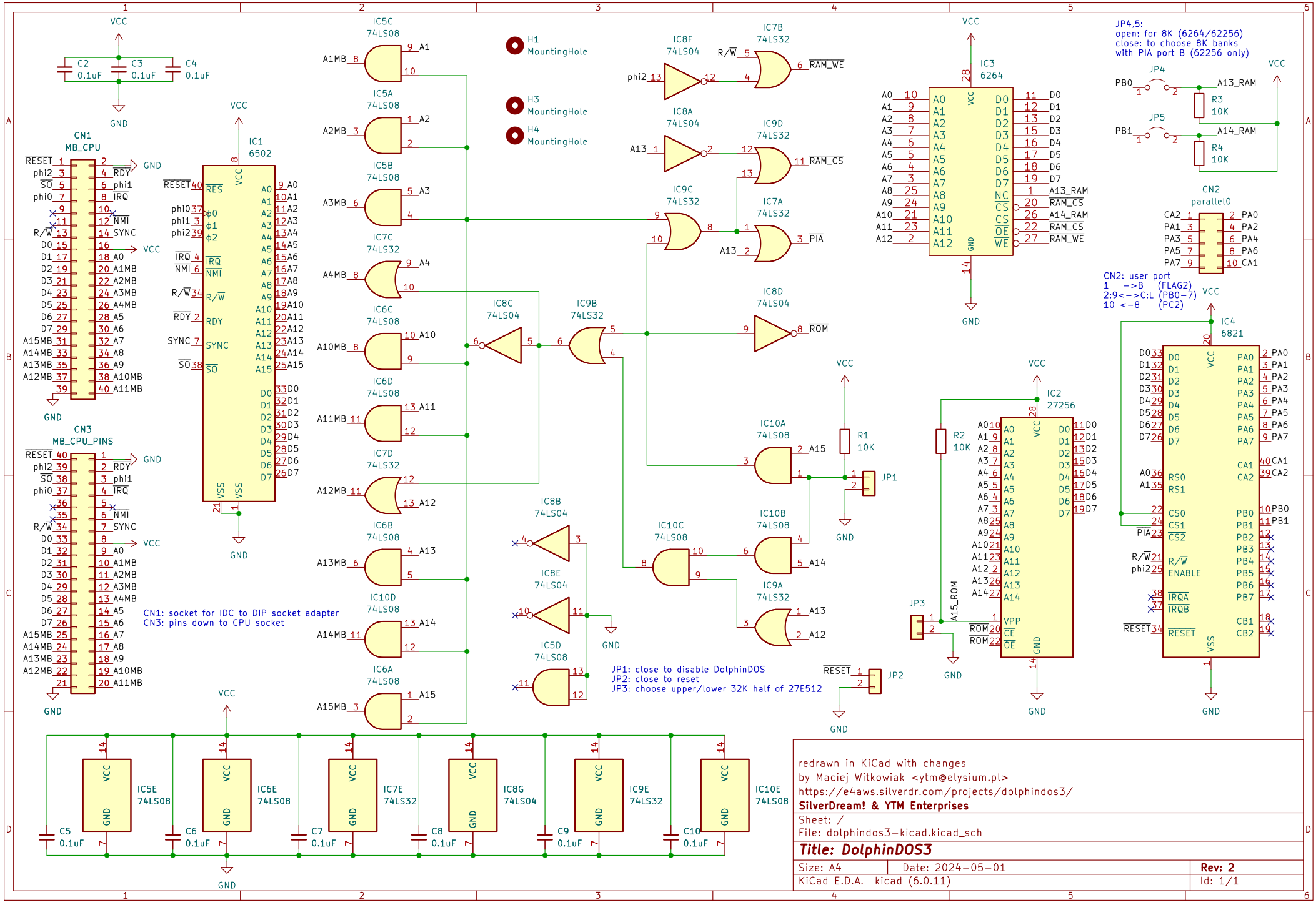
CN1: socket for IDC to DIP socket adapter
CN3: pins down to CPU socket
JP1: close to disable DolphinDOS
JP2: close to reset
JP3: choose upper/lower 32K half of 27E512
JP4,5:
open: for 8K (6264/62256)
close: to choose 8K banks
with PIA port B (62256 only)
CN2: user port
1 -->B (FLAG2)
2:9<-->C:L (PB0-7)
10 <-8 (PC2)
redrawn in KiCad with changes
by Maciej Witkowiak <ytm@elysium.pl>
https://e4aws.silverdr.com/projects/dolphindos3/
SilverDream! & YTM Enterprises
Sheet: /
File: dolphindos3-kicad.kicad_sch
Title: DolphinDOS3
Size: A4
Date: 2024-05-01
Rev: 2
KiCad E.D.A. kicad (6.0.11)
Id: 1/1